DocuSign Envelope ID: F17910F4-1872-4F36-82CA-51E95744D367

5/14/99

PROJECT REFERENCE NO.	SHEET NO.
U-2524D	2C-6

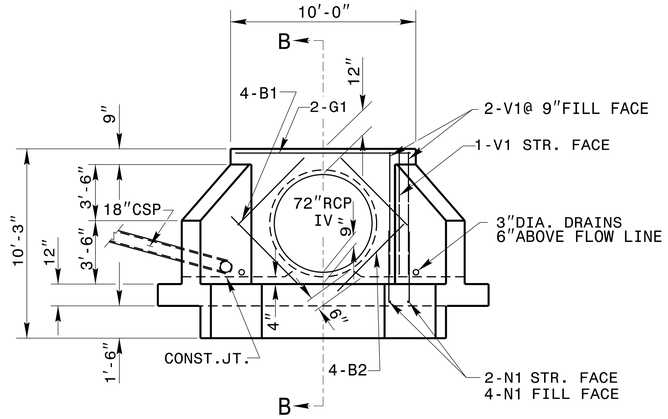

ELEVATION

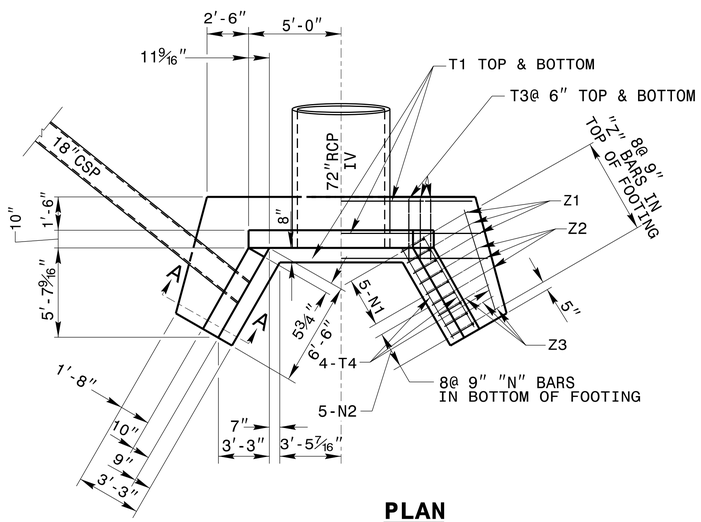

PLAN

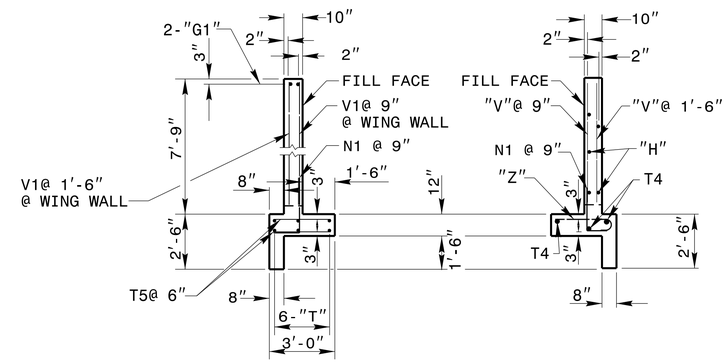

SECTION-BB

SECTION-AA

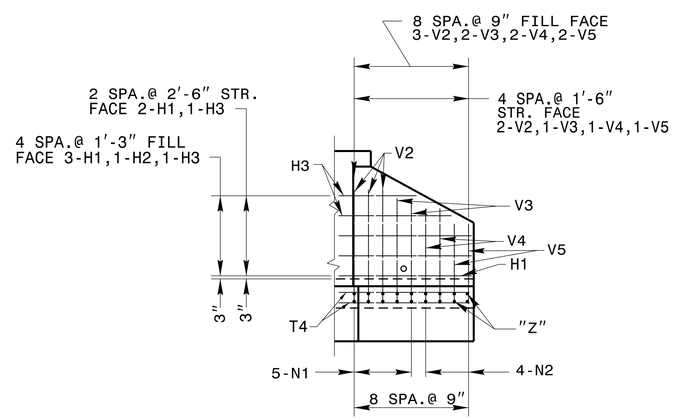

WING ELEVATION

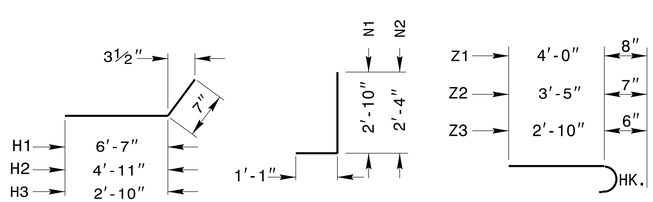

"H" BARS "N" BARS "Z" BARS

"H","N",&"Z" BAR DIMENSIONS ARE OUT TO OUT.

GENERAL NOTES:

ALL CONCRETE TO BE CLASS "A".

ALL REINFORCING STEEL TO BE ASTMA615-GRADE 60.

ALL REINFORCING STEEL TO BE DEFORMED BARS. WHERE SPLICING OF REINFORCMENT IS NECESSARY, BARS ARE TO BE LAPPED 45 DIAMETERS. ALL DIMENSIONS RELATIVE TO REINFORCEMENT ARE TO CENTERS OF BARS.

THE FOOTING, CURTAIN WALL AND 4" OF WALL ARE TO BE POURED IN ONE OPERATION ALLOWING NO TIME FOR INITIAL SET TO TAKE PLACE BETWEEN THEM. THE REMAINING WALL SHALL THEN BE POURED IN ONE OPERATION.

ALL EXPOSED CORNERS ARE TO BE CHAMFERED 1".

3" DIAMETER DRAINS TO BE PLACED IN WALL AS SHOWN AND BE 6" ABOVE NORMAL FLOW LINE.

ALL MATERIAL AND WORKMANSHIP AS PER N.C.DEPARTMENT OF TRANSPORTATION STANDARD SPECIFICATIONS.

DIMENSION TO BE ADJUSTED AS DIRECTED BY THE ENGINEER.

BILL OF MATERIAL FOR ENDWALL

REINFORCING STEEL

BAR	SIZE	LENGTH	NO.	WEIGHT
B1	#4	5'-6"	4	15
B2	#4	4'-6"	4	12
G1	#7	9'-8"	2	40
H1	#4	7'-2"	10	48
H2	#4	5'-6"	2	7
H3	#4	3'-5"	4	9
N1	#5	3'-11"	14	57
N2	#4	3'-5"	8	18
T1	#4	14'-6"	6	58
T4	#4	6'-9"	6	27
T5	#4	2'-6"	40	67
V1	#4	7'-3"	6	29
V2	#4	5'-10"	10	39
V3	#4	5'-0"	6	20
V4	#4	4'-1"	6	16
V5	#4	3'-2"	6	13
Z1	#6	4'-8"	6	42
Z2	#5	4'-0"	6	25
Z3	#4	3'-4"	6	13
REINF. STEEL LBS.				555
CON./R.C. CU. YDS			7.1	

CONCRETE DEDUCTION FOR 72"RCP III = 1.077 CY.
CONCRETE DEDUCTION FOR 18"CSP = 0.061 CY.
TOTAL DEDUCTION = 1.138 CY.
SAY = 1.1 CY.

NO CONCRETE DEDUCTION HAVE BEEN MADE FOR PIPES

NORTH CAROLINA PROFESSIONAL SEAL 022966 ENGINEER
Digitally signed by Jason S. Hoyle
6/2/2016

CONTRACT STANDARDS & DEVELOPMENT UNIT
STANDARDS AND SPECIAL DESIGN
Office 919-707-6950 FAX 919-250-4119

REINFORCED CONCRETE ENDWALL

ORIGINAL BY: DATE:
MODIFIED BY: rnbritt DATE: 05-03-2016
CHECKED BY: DATE:
FILE SPEC.: details/nbritt/english/urban/u2524d 72 18 endwall.dgn

STRUCTURE #10A1

DOCUMENT NOT CONSIDERED FINAL UNLESS ALL SIGNATURES COMPLETED

$$$$SYSTEM$$$$ $$$$DGN$$$$
$$$$USERNAME$$$$ $$$$DATE$$$$