PROJECT REFERENCE NO.	SHEET NO.
B-4490	Sig. 16.1

EDI MODEL 2018ECL-NC CONFLICT MONITOR PROGRAMMING DETAIL

(remove jumpers and set switches as shown)

REMOVE DIODE JUMPERS 1-5, 1-6, 1-9, 1-11, 1-12, 2-5, 2-6, 2-10, 2-11, 2-12, 3-7, 3-8, 3-9, 3-10, 3-12, 4-7, 4-8, 4-9, 4-11, 4-12, 5-9, 5-10, 5-11, 6-9, 6-10, 6-12, 7-10, 7-11, 7-12, 8-9, 8-10, 8-11, 9-10, 9-11, 9-12, 10-11, 10-12 and 11-12.

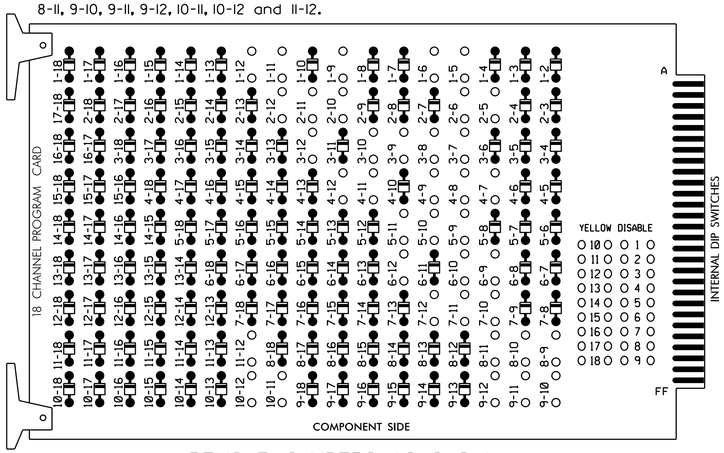

REMOVE JUMPERS AS SHOWN

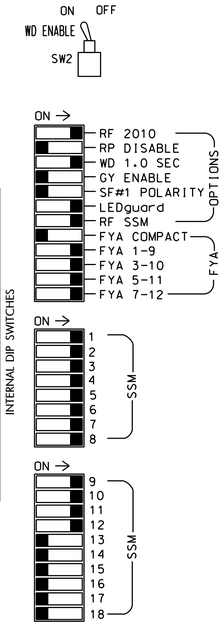

■ = DENOTES POSITION OF SWITCH

NOTES:

1. Card is provided with all diode jumpers in place. Removal of any jumper allows its channels to run concurrently.
2. Ensure jumpers SEL2-SEL5 and SEL9 are present on the monitor board.
3. Ensure that Red Enable is active at all times during normal operation.
4. Connect serial cable from conflict monitor to comm. port 1 of 2070 controller. Ensure conflict monitor communicates with 2070.

SIGNAL HEAD HOOK-UP CHART

LOAD SWITCH NO.	S1		S2	S3	S4		S5	S6	S7		S8	S9	S10		S11	S12	AUX S1	AUX S2	AUX S3	AUX S4	AUX S5	AUX S6
CMU CHANNEL NO.	1		2	13	3		4	14	5		6	15	7		8	16	9	10	17	11	12	18
PHASE	1		2	2 PED	3		4	4 PED	5		6	6 PED	7		8	8 PED	OLA	OLB	SPARE	OLC	OLD	SPARE
SIGNAL HEAD NO.	11	83,84★	21,22	NU	31	23★	41,42	NU	51	43★	61,62	NU	71	63★	81,82	NU	83,84★	23★	NU	43★	63★	NU
RED			128				101				134				107		A121	A124		A114	A101	
YELLOW			129				102				135				108							
GREEN			130				103				136				109							
RED ARROW	125				116				131				122									
YELLOW ARROW	126				117				132				123				A122	A125		A115	A102	
FLASHING YELLOW ARROW																	A123	A126		A116	A103	
GREEN ARROW	127	127			118	118			133	133			124	124								

NU = Not Used

★ See pictorial of head wiring on this sheet.

✳ Wire Overlaps A and B to flash on Flasher Unit #1, Circuit #2.
Wire Overlaps C and D to flash on Flasher Unit #1, Circuit #1.

EQUIPMENT INFORMATION

CONTROLLER.....2070L
CABINET.....332 W/AUX
SOFTWARE.....ECONOLITE OASIS
CABINET MOUNT.....BASE
OUTPUT FILE POSITIONS...18 (12-STD; 6-AUX)
LOAD SWITCHES USED.....S1,S2,S4,S5,S7
S8,S10,S11,AUX S1
AUX S2,AUX S4,AUX S5
PHASES USED.....1,2,3,4,5,6,7,8
OVERLAP 'A'.....1+8
OVERLAP 'B'.....2+3
OVERLAP 'C'.....4+5
OVERLAP 'D'.....6+7

FYA SIGNAL WIRING DETAIL

(wire signal heads as shown)

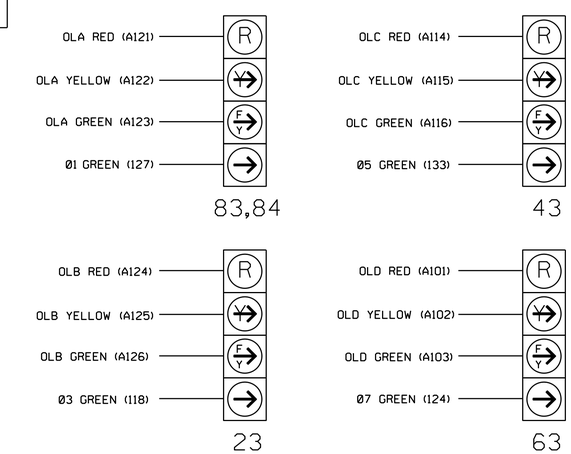

NOTE

The sequence display for these signal heads require special logic programming. See sheet 2 for programming instructions.

INPUT FILE POSITION LAYOUT

(front view)

		1	2	3	4	5	6	7	8	9	10	11	12	13	14
FILE "I"	U	Ø1 1A	Ø1 1B	SLOT EMPTY	SLOT EMPTY	Ø3 3A	Ø4 4A	SLOT EMPTY	SLOT EMPTY	Ø1 1C	SLOT EMPTY	SLOT EMPTY	SLOT EMPTY	SLOT EMPTY	FS DC ISOLATOR
	L	NOT USED	Ø2 2A,2B			NOT USED	NOT USED			NOT USED					ST DC ISOLATOR
FILE "J"	U	Ø5 5A	Ø5 5B	SLOT EMPTY	SLOT EMPTY	Ø7 7A	Ø8 8A	SLOT EMPTY	SLOT EMPTY	SLOT EMPTY	SLOT EMPTY	SLOT EMPTY	SLOT EMPTY	SLOT EMPTY	SLOT EMPTY
	L	NOT USED	Ø6 6A,6B			NOT USED	Ø8 8B								

EX.: 1A, 2A, ETC. = LOOP NO.'S

FS = FLASH SENSE
ST = STOP TIME

INPUT FILE CONNECTION & PROGRAMMING CHART

LOOP NO.	LOOP TERMINAL	INPUT FILE POS.	PIN NO.	INPUT ASSIGNMENT NO.	DETECTOR NO.	NEMA PHASE	CALL	EXTEND	FULL TIME DELAY	STRETCH TIME	DELAY TIME
1A	TB2-1,2	I1U	56	18	1	1	Y	Y			
1B	TB2-5,6	I2U	39	1	2	1	Y	Y			15
1C	TB6-9,10	I9U	60	22	11	1	Y	Y			15
2A,2B	TB2-7,8	I2L	43	5	12	2	Y	Y			
3A	TB4-5,6	I5U	58	20	3	3	Y	Y			3
4A	TB4-9,10	I6U	41	3	4	4	Y	Y			
5A	TB3-1,2	J1U	55	17	5	5	Y	Y			
5B	TB3-5,6	J2U	40	2	6	5	Y	Y			15
6A,6B	TB3-7,8	J2L	44	6	16	6	Y	Y			
7A	TB5-5,6	J5U	57	19	7	7	Y	Y			
8A	TB5-9,10	J6U	42	4	8	8	Y	Y			
8B	TB5-11,12	J6L	46	8	18	8	Y	Y			

INPUT FILE POSITION LEGEND: J2L

FILE J
SLOT 2
LOWER

NOTES

1. To prevent "flash-conflict" problems, insert red flash program blocks for all unused vehicle load switches in the output file. The installer shall verify that signal heads flash in accordance with the Signal Plans.
2. Enable Simultaneous Gap-Out for all phases.
3. Program phases 2 and 6 for Start Up In Green.
4. Program phases 2 and 6 for Yellow Flash, and overlaps 1 and 4 as Wag Overlaps.
5. The cabinet and controller are part of the Fayetteville Signal System.

THIS ELECTRICAL DETAIL IS FOR
THE SIGNAL DESIGN: Ø6-1336T3
DESIGNED: June 2015
SEALED: 8/28/15
REVISED: N/A

Electrical Detail - Sheet 1 of 2 - Temp 3 Phase 3

ELECTRICAL AND PROGRAMMING DETAILS FOR:

Prepared in the Offices of:
Transportation Mobility and Safety Division
STATE OF NORTH CAROLINA DEPARTMENT OF TRANSPORTATION
Signals Management Section
750 N.Greenfield Pkwy,Garner,NC 27529

NC 24-210 (Rowan Street)/
NC 24 (Bragg Boulevard) at
NC 210 (Murchison Road)/
Bragg Boulevard

Division 6 Cumberland County Fayetteville

PLAN DATE: July 2015	REVIEWED BY:
PREPARED BY: B. Simmons	REVIEWED BY:

REVISIONS	INIT.	DATE

SEAL
NORTH CAROLINA PROFESSIONAL SEAL 022013 ENGINEER GEORGE C. BROWN

DocuSigned by: George C. Brown 8/31/2015
F12601E0GBE834 DATE

SIG. INVENTORY NO. 06-1336T3

31-AUG-2015 08:56
S:\TTSAG\TIS\Signals\Workgroups\Sig Mgmt\BSimmons\Working Folder\Electrical Details\Division 06\06T336_smalls_xxx.dgn
bsimmons