DocuSign Envelope ID: DC775682-5E1B-4E0B-8996-A8064F053A1C

PROJ. REFERENCE NO.	SHEET NO.
B-4490	TMP-19

HDR Engineering, Inc. of the Carolinas
3733 National Drive, Suite 207 Raleigh, N.C. 27612
N.C.B.E.L.S. License Number: F-0116

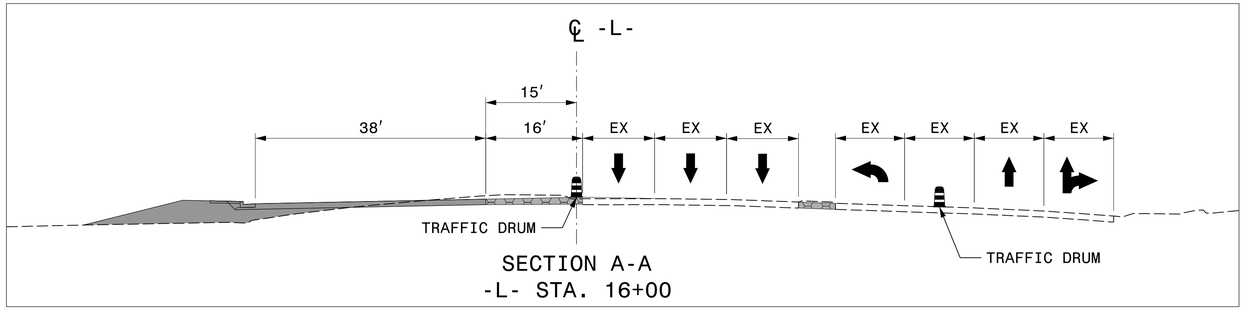

SECTION A-A
-L- STA. 16+00

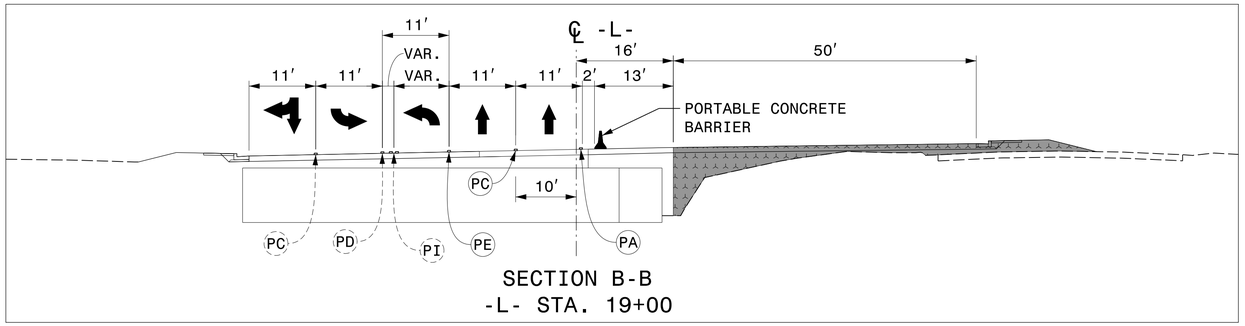

SECTION B-B
-L- STA. 19+00

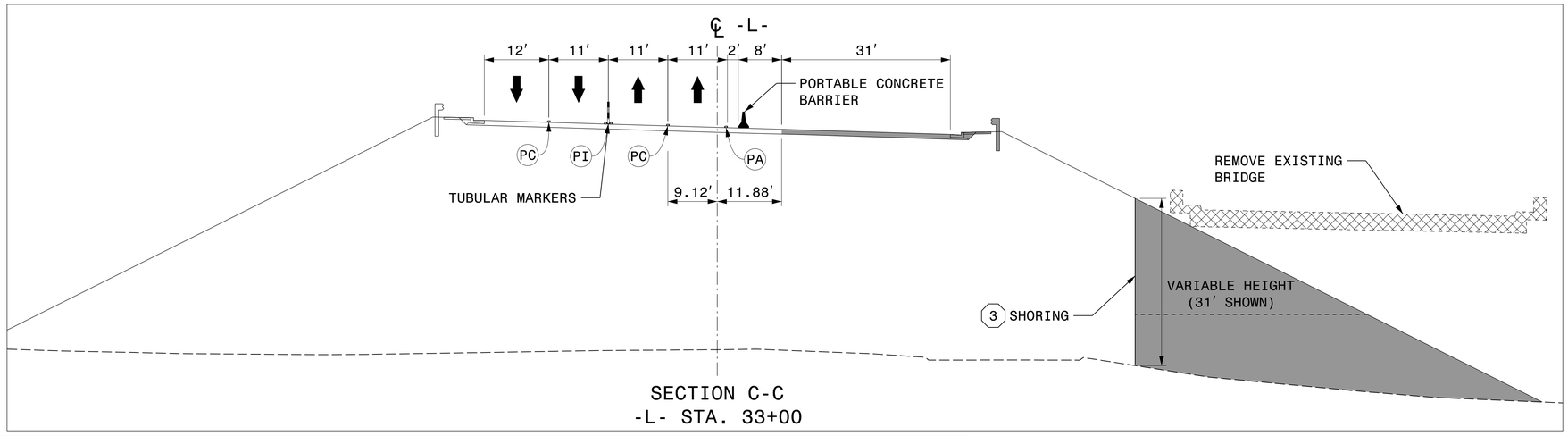

SECTION C-C
-L- STA. 33+00

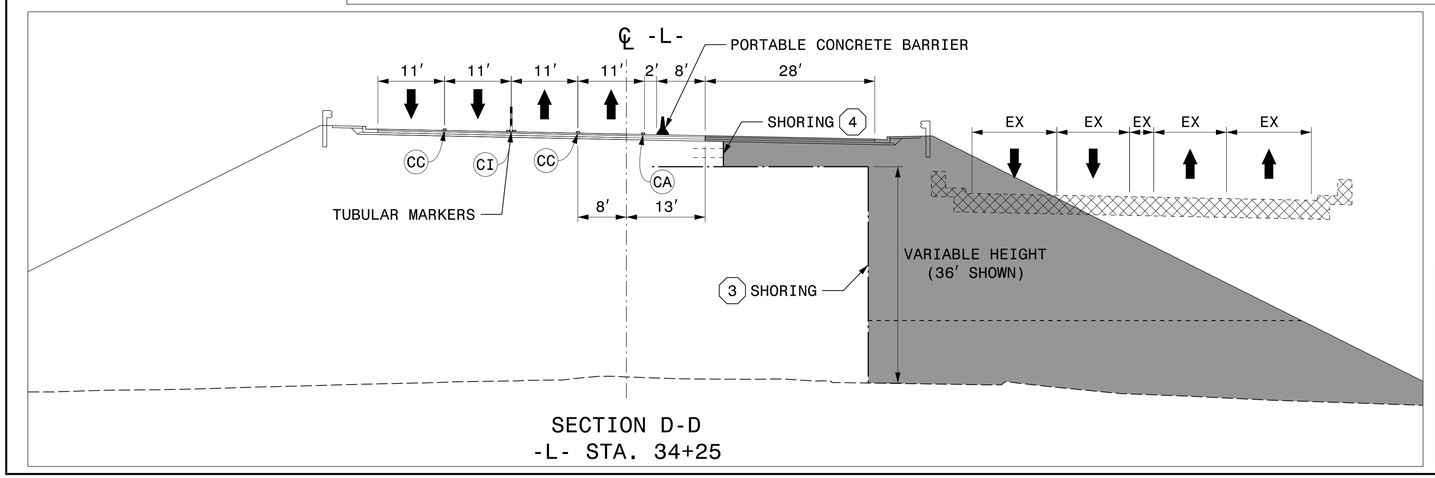

SECTION D-D
-L- STA. 34+25

APPROVED: DocuSigned by: R. Erskine Brooks F058C5F74846EE...

DATE: 3/30/2016

SEAL

NORTH CAROLINA PROFESSIONAL SEAL 032584 ENGINEER R. ERSKINE BROOKS

DOCUMENT NOT CONSIDERED FINAL UNLESS ALL SIGNATURES COMPLETED

DIVISION OF HIGHWAYS · STATE OF NORTH CAROLINA · DEPARTMENT OF TRANSPORTATION · WORK ZONE TRAFFIC CONTROL

PHASE 2
TYPICAL SECTIONS

PLOT DRIVER: NCDOT_pdf_color_eng_100.plt PENTABLE: NCDOT_tcp.tbl
USER: charnden DATE: 3/28/2016 TIME: 10:26:42 AM
FILE: pw:\\PWAPPTPA01\SouthEast_Tampa\Documents\000166\CON00079759\0000000000220964\06.00_Project_Design\B-4490\Traffic\TrafficControl\TCP\B-4490_TMP_TMP-19.dgn