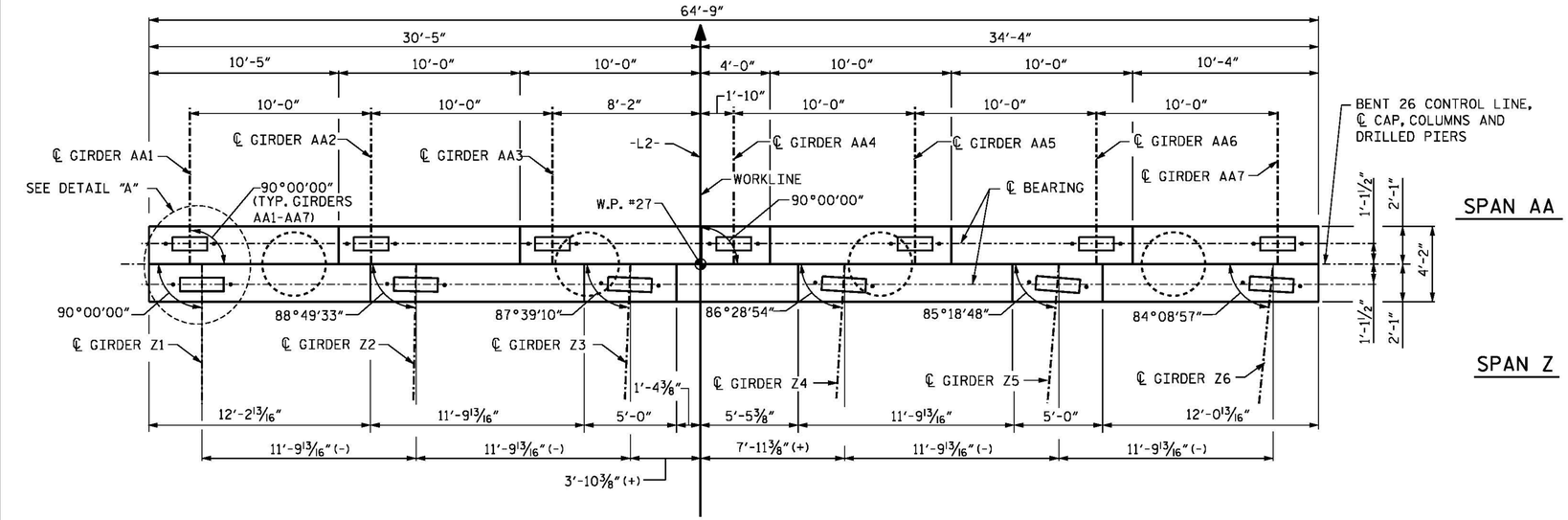

PLAN

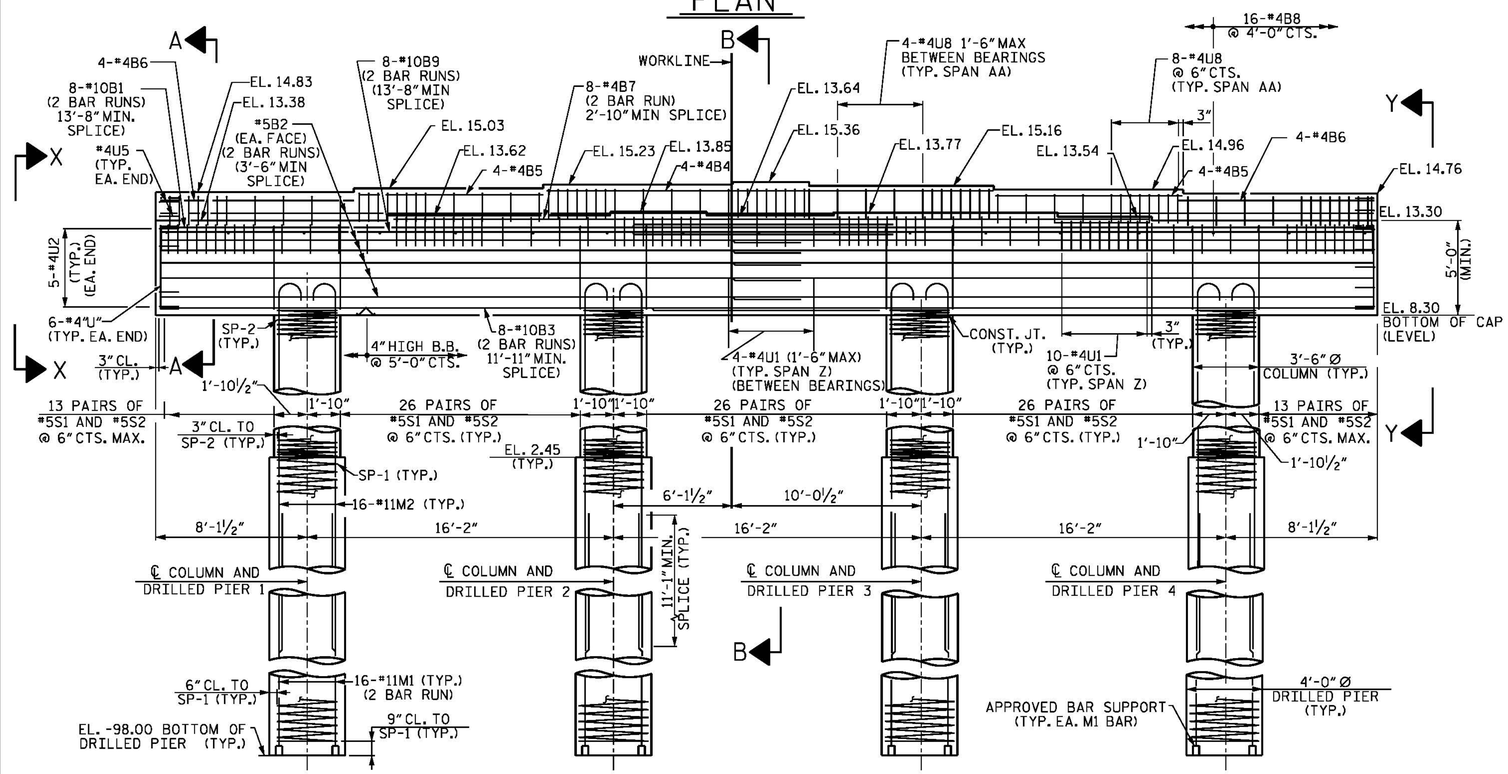

ELEVATION

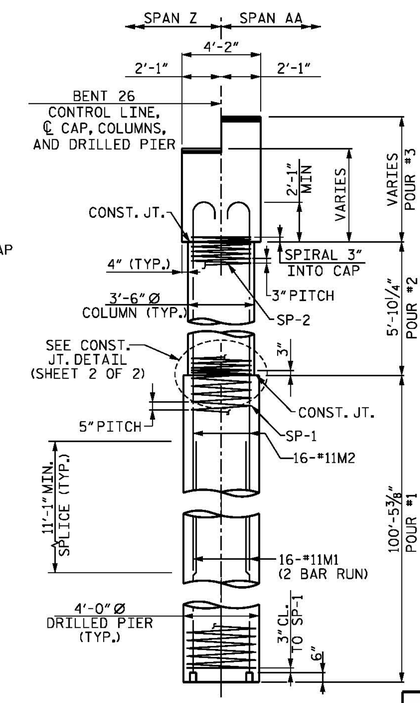

END ELEVATION

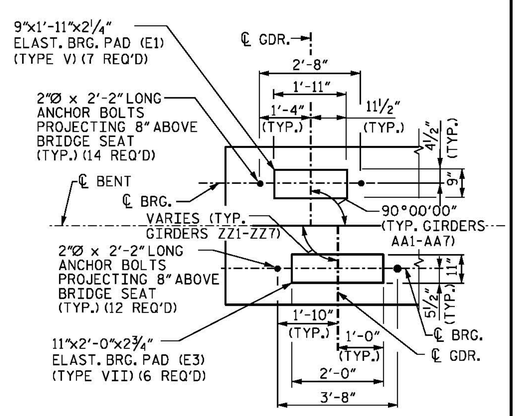

DETAIL "A"

(TYP. AT EACH BEARING)

NOTES:

STIRRUPS AND "U" BARS IN CAP MAY BE SHIFTED SLIGHTLY AS NECESSARY TO CLEAR ANCHOR BOLTS.

HOOKS IN #11M2 BARS MAY BE TURNED AS NECESSARY FOR PLACING REINFORCING STEEL. HOOKS MUST BE PLACED SUCH THAT 3" MIN. CONCRETE COVER IS PROVIDED TO THE FACE OF CAP.

ALL STEEL IN THE DRILLED PIERS IS INCLUDED IN THE PAY ITEMS FOR "EPOXY COATED REINFORCING STEEL" AND "EPOXY COATED SPIRAL COLUMN REINFORCING STEEL".

THE CONTRACTOR'S ATTENTION IS CALLED TO THE FACT THAT THE EPOXY COATED LONGITUDINAL REINFORCEMENT FOR THE DRILLED PIERS IS DETAILED WITH 3 FEET OF EXTRA LENGTH.

NO SEPARATE PAYMENT SHALL BE MADE FOR ANY ADDITIONAL STEEL REQUIRED IN CONSTRUCTION OF THE DRILLED PIER AS THIS IS CONSIDERED INCIDENTAL TO THE LINEAR FOOT PRICE FOR DRILLED PIER.

FOR SECTIONS A-A AND B-B AND VIEWS X-X AND Y-Y SEE SHEET 2 OF 2.

THE TOP SURFACE AREAS OF THE BENT CAPS SHALL BE CURED IN ACCORDANCE WITH THE STANDARD SPECIFICATIONS EXCEPT THE MEMBRANE CURING COMPOUND METHOD SHALL NOT BE USED.

PROJECT NO. B-4929

PENDER COUNTY

STATION: 38+13.81 -L2-

SHEET 1 OF 2

STATE OF NORTH CAROLINA
DEPARTMENT OF TRANSPORTATION
RALEIGH

SUBSTRUCTURE

BENT 26

PLAN AND ELEVATION

DESIGNED BY:	M. WAGNER	DATE :	JAN. 2016
DRAWN BY:	B. CALDWELL	DATE :	FEB. 2016
CHECKED BY:	J. SHERMAN	DATE :	MAR. 2016
DESIGN ENGINEER OF RECORD:	J. DOUGHTY	DATE :	MAY 2016

PARSONS BRINCKERHOFF
434 FAYETTEVILLE STREET
SUITE 1500
RALEIGH, NC 27601
LICENSE NO. F-0165

NORTH CAROLINA PROFESSIONAL SEAL 032967 ENGINEER JASON R. DOUGHTY
5/12/16
DocuSigned by: Jason R Doughty
00F1C86448274F7...

DOCUMENT NOT CONSIDERED FINAL UNLESS ALL SIGNATURES COMPLETED

REVISIONS							SHEET NO.
NO.	BY:	DATE:	NO.	BY:	DATE:		S-196
1			3				TOTAL SHEETS
2			4				278

5/12/2016
400_385_B4929_SMU_IB261.dgn