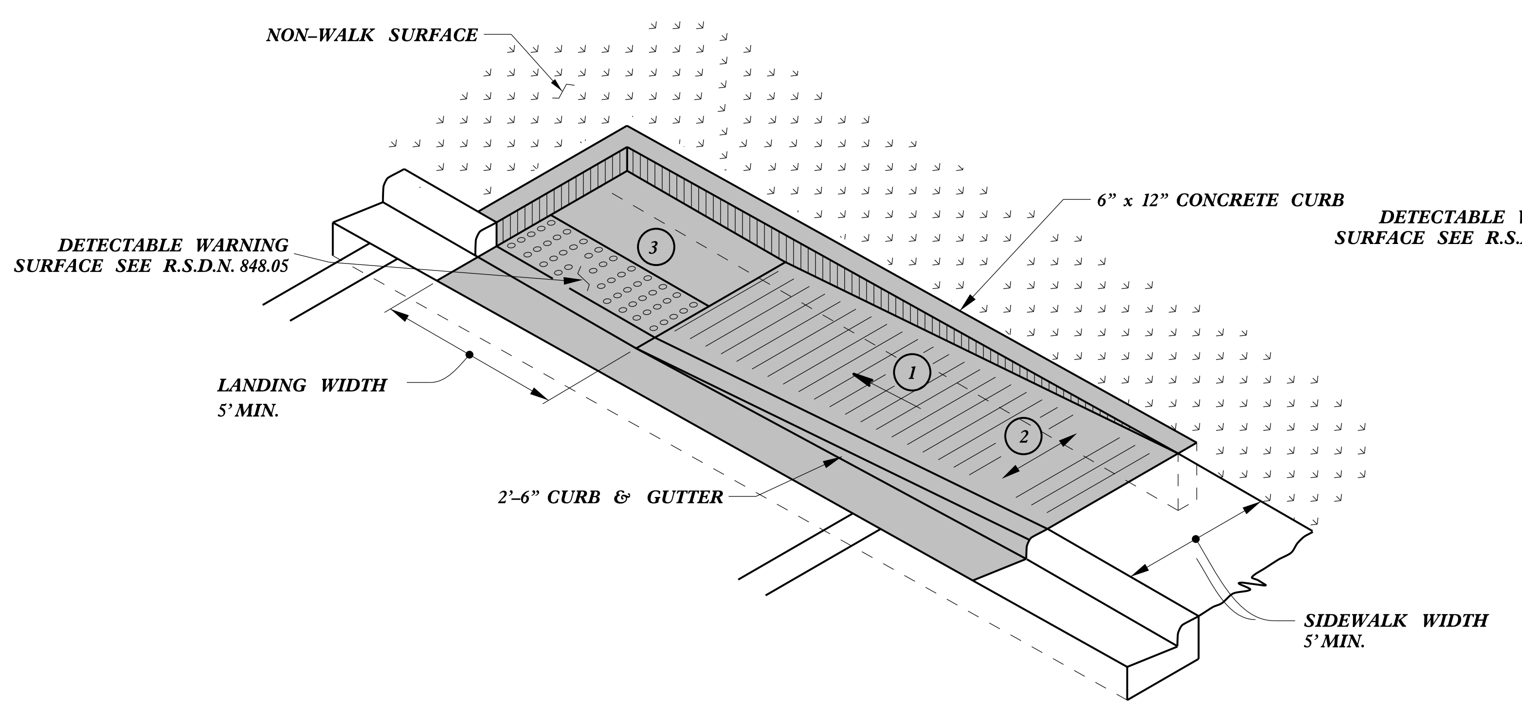

TYPE 1A

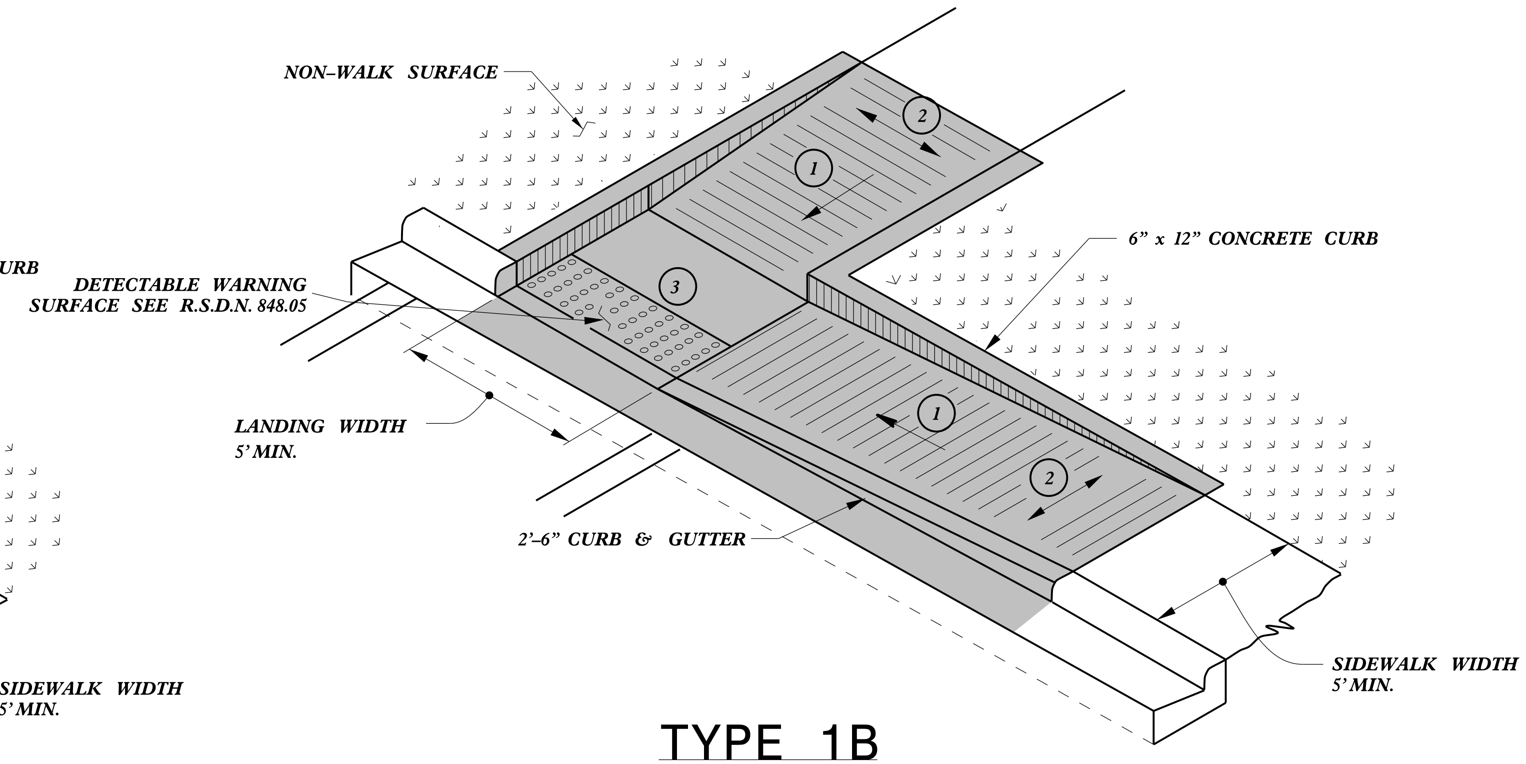

TYPE 1B

PAY LIMITS FOR 1 CURB RAMP

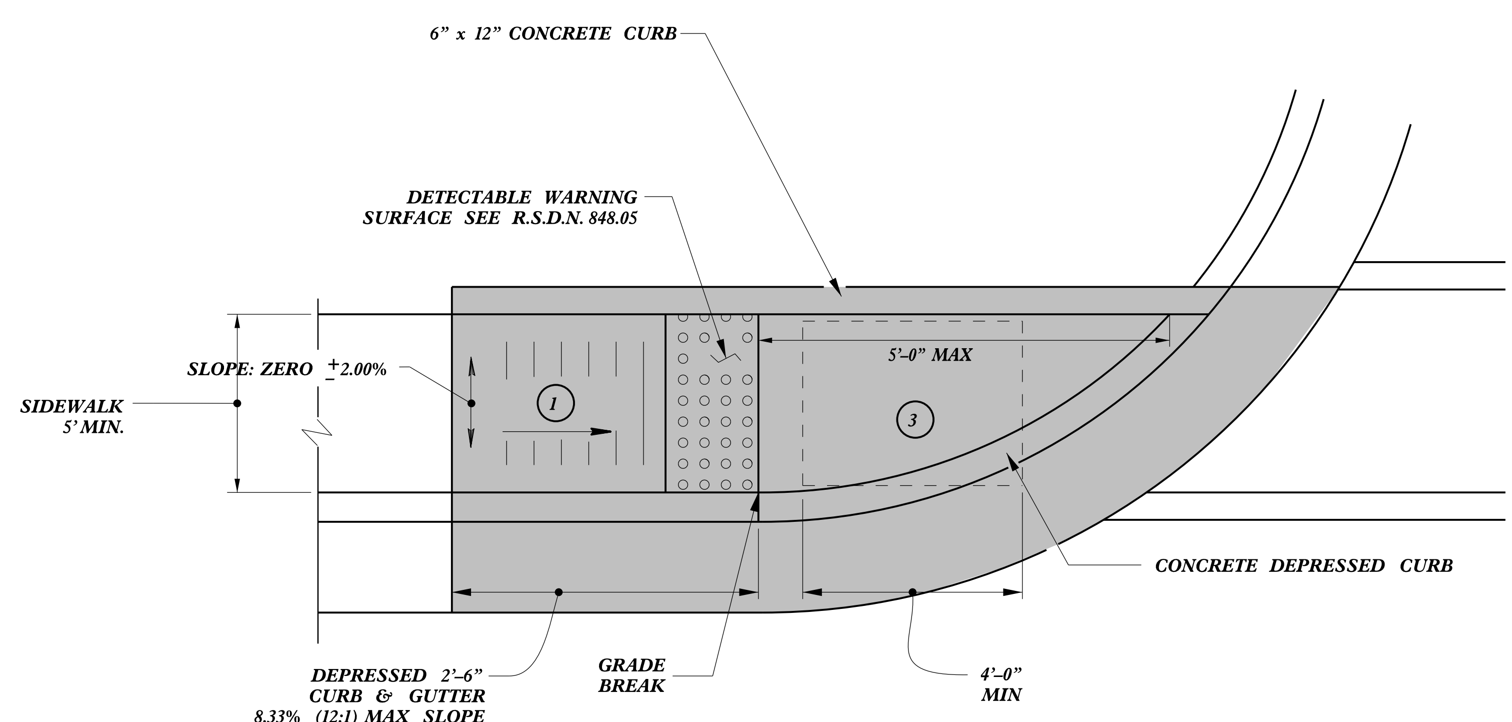

TYPE 1

(1) 8.33% (12:1) MAX RAMP SLOPE

(2) CROSS SLOPE: 2.00%

(3) CURB RAMPS REQUIRE A (4’–0”) MINIMUM LANDING WITH A MAXIMUM CROSS SLOPE AND LONGITUDINAL SLOPE OF 2.00% WHERE PEDESTRIANS PERFORM TURNING MANEUVERS. SLOPE TO DRAIN TO CURB.

REFER TO ROADWAY STANDARD DRAWING NUMBER 848.05 SHEET 3 OF 3 FOR ALL RAMP NOTES

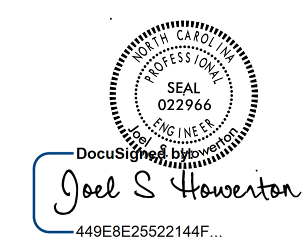

11/18/2015

DOCUMENT NOT CONSIDERED FINAL UNLESS ALL SIGNATURES COMPLETED

CONTRACT STANDARDS AND DEVELOPMENT UNIT
Office 919-707-6950 FAX 919-250-4119

CURB RAMPS

Directional Ramps

ORIGINAL BY: J.S. HOWERTON DATE: 7/7/11
MODIFIED BY: DATE:
CHECKED BY: DATE:
FILE SPEC.: stds/2012CurbRamp/CurbRampDetails.dgn

5/14/99

$$$$$$SYSTIME$$$$$
$$$$$$$$$$$$DGN$$$$$$$$$$$$$$$$$
$$$$$USERNAME$$$$