PROJECT REFERENCE NO.	SHEET NO.
U-3308	Sig. 32.2

EMERGENCY VEHICLE PREEMPTION PROGRAMMING

1. Program EVB preempt as follows:
   Main Menu - 2) PREEMPT - 4) EMERGENCY VEHICLE
   EVB Clear = 2
   EVB Clearance Phases = 3,8

2. Program general preemption parameters as follows:
   Main Menu - 2) PREEMPT - 6) MISC PREEMPTION PARAMETERS
   Min Time Before PE ForceOff = 1

3. Ped Clear Before Preempt is a pedestrian timing parameter, and is programmed as follows:
   Main Menu - 1) PHASE - 5) PEDESTRIAN TIMING
   PHASE 2 MIN FDW = 5

Program extend time on optical detector units for 2.0 sec for EVB

FYA PPLT PROGRAMMING (SIGNAL HEAD 31)

1. Program Flashing Yellow Arrow phases as follows:
   Main Menu - 1) PHASE - 2) PHASE FUNCTIONS PAGE TWO
   PPLT FYA = PHASE 3

2. Assign output pin for Flashing Yellow Arrow as follows:
   Main Menu - 6) OUTPUTS - F) FYA PPLT
   Phase 3 = 96

3. Redirect RED and YELLOW outputs for the left turn phases as follows:
   Main Menu - 6) OUTPUTS - 8) REDIRECT PHASE
   Phase 3 RED = 94, Phase 3 YELLOW = 95

SPECIAL NOTE EV PREEMPT PROGRAMMING

Setting 'FYA DURING PREEMPT' to 'Y' eliminates yellow trap when transitioning to preempt from adjacent through phase.
Main Menu - 9) UTILITIES - 9) MISC
FYA DURING PREEMPT (Y/N) = Y

COUNTDOWN PEDESTRIAN SIGNAL OPERATION

Countdown Ped Signals are required to display timing only during Ped Clearance Interval. Consult Ped Signal Module user's manual for instructions on selecting this feature.

MIN WALK DURING PREEMPTION PROGRAMMING

To disable MIN WALK pedestrian timing during preemption, program the controller as follows:
Main Menu - 9) UTILITIES - 5) CONFIGURATION
EXTRA TWO = 3

FLASHER CIRCUIT MODIFICATION DETAIL

In order to insure that signals flash concurrently on the same approach, make the following flasher circuit changes:

1. On rear of PDA - Remove wire from Term. T2-4 and Terminate on T2-2.
2. On rear of PDA - Remove wire from Term. T2-5 and Terminate on T2-3.
3. Remove Flasher Unit 2.

The changes listed above ties all Phases and Overlaps to Flasher Unit 1.

OVERLAP (1), (3) & (4) PROGRAMMING DETAIL

Program overlaps as follows:
Main Menu - 4) OVERLAP

OVERLAP [1]:
LOADSWITCH = 9
VEH SET 1 = 2,6
YELLOW CLEARANCE = 3.8
RED CLEARANCE = 1.5

Press "+" Twice

OVERLAP [3]:
LOADSWITCH = 11
VEH SET 1 = 2,6
YELLOW CLEARANCE = 3.8
RED CLEARANCE = 1.5

Press "+"

OVERLAP [4]:
LOADSWITCH = 12
VEH SET 1 = 4,8
YELLOW CLEARANCE = 4.4
RED CLEARANCE = 1.7

END OF OVERLAP PROGRAMMING

STARTUP CALLS PROGRAMMING

Prevents Veh Call to phase 3 during Startup. Phase 3 used only during Preempt.
Main Menu - 9) UTILITIES - 1) STARTUP
VEHICLE CALLS 2,4,6,8

OVERLAP GREEN FLASH PROGRAMMING (SIGNAL HEAD 21, 41 & 61)

The following will cause the overlap green output to flash, which is wired to the FYA. Program as follows:

Main Menu - 1) PHASE - 2) PHASE FUNCTIONS PAGE TWO
OLAP G FL = 1, 3, 4

THIS ELECTRICAL DETAIL IS FOR THE SIGNAL DESIGN: 05-1029T2
DESIGNED: September 2014
SEALED: 4/2/15
REVISED: N/A

Electrical Detail - Sheet 2 of 2 (Temporary Design 2)

ELECTRICAL AND PROGRAMMING DETAILS FOR:

Prepared in the Offices of:
Transportation Mobility and Safety Division
STATE OF NORTH CAROLINA
DEPARTMENT OF TRANSPORTATION
Signals Management Section
750 N.Greenfield Pkwy,Garner,NC 27529

NC 55 (North Alston Avenue) at Liberty St

Division 5 Durham County Durham

PLAN DATE:	November 2014	REVIEWED BY:	T. Joyce
PREPARED BY:	B. Simmons	REVIEWED BY:	

REVISIONS	INIT.	DATE

SEAL
NORTH CAROLINA PROFESSIONAL SEAL 022013 ENGINEER GEORGE C. BROWN

DocuSigned by: George C. Brown 4/7/2015
F12601EDGBEB434 DATE

SIG. INVENTORY NO. 05-1029T2

27-MAR-2015 10:40
S:\TIS\SU\TIS Signals\Workgroups\Sig Man\Simmons\Working Folder\Electrical Details\Division 05\051029_sm_ele_xxx.dgn
bsimmons

DocuSign Envelope ID: 2B82073C-8CA6-44D2-96FA-5BE27AB92A1C

PROJECT REFERENCE NO.	SHEET NO.
U-3308	Sig. 33.0

2 Phase Fully Actuated W/ EV Preemption (Durham Signal System)

PHASING DIAGRAM

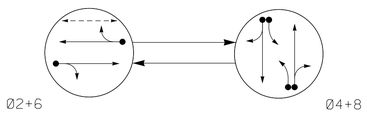

PHASING DIAGRAM DETECTION LEGEND

- DETECTED MOVEMENT
- UNDETECTED MOVEMENT (OVERLAP)
- UNSIGNALIZED MOVEMENT
- PEDESTRIAN MOVEMENT

EV Preempt Phases

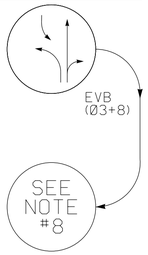

TABLE OF OPERATION

SIGNAL FACE	PHASE Ø2+6	Ø4+8	EVB	FLOAT
22,23	G	R	R	Y
31	~~R~~	FY	←	~~R~~
41	~~R~~	FY	FY	~~R~~
42,43	R	G	R	R
62,63	G	R	R	Y
81,82	R	G	G	R
P61,P62	W	DW	DW	DRK

2033 SOFTWARE w/ 2070 CONTROLLER LOOP & DETECTOR UNIT INSTALLATION CHART

INDUCTIVE LOOPS						DETECTOR PROGRAMMING																	
								TIMING		ATTRIBUTES										STATUS			
LOOP NO.	SIZE (ft)	TURNS	DIST. FROM STOPBAR (ft)	NEW	EXISTING	NEMA PHASE	DELAY	CARRY (STRETCH)	1 FULL TIME DELAY	2 PEDESTRIAN CALL	3 RESERVED	4 COUNT	5 EXTENSION	6 TYPE 3	7 CALLING	ALTERNATE **	SYSTEM LOOPS	NEW	EXISTING
2A	6x6	✳	70	✳	-	2	- SEC.	- SEC.	-	-	-	-	X	-	X	-	-	-	✳
4A	6x40	✳	0	✳	-	4	3 SEC.	- SEC.	-	-	-	-	X	-	X	-	-	-	✳
4B	6x40	✳	0	✳	-	4	10 SEC.	- SEC.	-	-	-	-	X	-	X	-	-	-	✳
6A	6x6	✳	70	✳	-	6	- SEC.	- SEC.	-	-	-	-	X	-	X	-	-	-	✳
8A	6x40	✳	0	✳	-	8	3 SEC.	- SEC.	-	-	-	-	X	-	X	-	-	-	✳
8B	6x40	✳	0	✳	-	8	10 SEC.	- SEC.	-	-	-	-	X	-	X	-	-	-	✳
PEDESTRIAN DETECTION																							
P61,P62	N/A	N/A	N/A	X	-	6	- SEC.	- SEC.	-	X	-	-	-	-	-	-	-	X	-

✳ Video Detection Zone

2033 EV PREEMPTION

FUNCTION	EVB (SECONDS)
DELAY BEFORE PREEMPT	0
MIN. PED. CLEAR BEFORE PREEMPT	✳
MIN. GREEN BEFORE PREEMPT	1
CLEARANCE TIME	2
PREEMPT EXTEND**	2.0

✳ See Timing Chart for Min Ped Clearance
** Program Timing on Optical Detector Unit

SIGNAL FACE I.D.

All Heads L.E.D.
✳ See Note 10

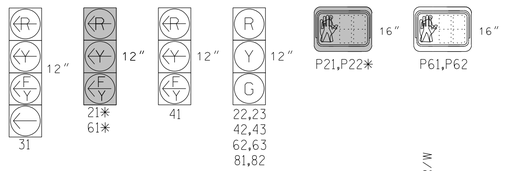

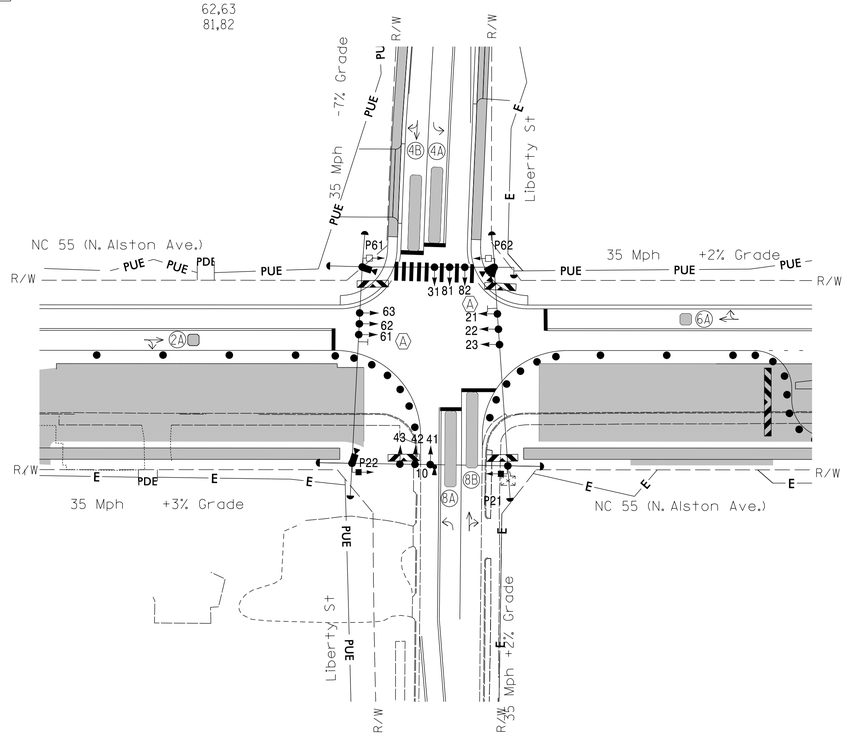

NOTES

1. Refer to "Road Standard Drawings NCDOT" dated January 2012, "Standard Specifications for Roads and Structures" dated January 2012.
2. Do not program signal for late night flashing operation unless otherwise directed by the Engineer.
3. Reposition signal heads #21, #22, #23, #41, #42, 43, #61, #62, and #63 during this phase of construction.
4. Set all detector units to presence mode.
5. Program all timing information into phase banks 1,2, and 3 unless otherwise noted.
6. Set phase bank 3 maximum limit to 250 seconds for phases used.
7. This intersection features an optical preemption system. Shown locations of optical detectors are conceptual only.
8. Upon completion of Emergency Vehicle Preemption, controller returns to normal operation.
9. Maximum times shown in timing chart are for free-run operation only. Coordinated signal system timing values supersede these values.
10. Disconnect and bag signal heads #21 and,#61, and pedestrian signal heads #P21 and #P22 during this phase of construction.
11. Contractor shall adjust video detection zones as required.

LEGEND

PROPOSED		EXISTING
○→	Traffic Signal Head	●→
◐→	Modified Signal Head	N/A
⊣	Sign	⊣
□	Pedestrian Signal Head With Push Button & Sign	■
○	Signal Pole with Guy	●
○	Signal Pole with Sidewalk Guy	●
▭	Inductive Loop Detector	▭
⊠	Controller & Cabinet	⊠
□	Junction Box	■
·-·-·	2-in Underground Conduit	·-·-·
N/A	Right of Way	
→	Directional Arrow	→
Ⓐ	"No Left Turn" (R3-2)	Ⓐ
▬	Work Area	N/A
●	Drums	N/A
E	Construction Easement	N/A
PUE	Permanent Utility Easment	N/A
PDE	Permanent Drainage Easment	N/A
▨	Barricades	N/A
———	Direct Bury	----------
○	Optical Detector	●
▭	Video Detector	■
▭	Video Detection Area	▭

TIMING CHART
2033 SOFTWARE w/2070 CONTROLLER

PHASE	Ø2	Ø3	Ø4	Ø6	Ø8	OL4
MINIMUM INITIAL *	10 SEC.	– SEC.	7 SEC.	10 SEC.	7 SEC.	0 SEC.
VEHICLE EXTENSION *	3.0 SEC.	– SEC.	2.0 SEC.	3.0 SEC.	2.0 SEC.	
YELLOW CHANGE INT.	3.7 SEC.	4.4 SEC.	4.4 SEC.	3.7 SEC.	4.4 SEC.	4.4 SEC.
RED CLEARANCE	1.6 SEC.	1.9 SEC.	1.2 SEC.	1.6 SEC.	1.2 SEC.	1.4 SEC.
MAXIMUM LIMIT *	50 SEC.	35 SEC.	35 SEC.	50 SEC.	35 SEC.	
RECALL POSITION	VEH. RECALL	NONE	NONE	VEH. RECALL	NONE	
VEHICLE CALL MEMORY	YELLOW LOCK	NONE	NONE	YELLOW LOCK	NONE	
DOUBLE ENTRY	OFF	OFF	ON	OFF	ON	
WALK *	– SEC.	– SEC.	– SEC.	4 SEC.	– SEC.	
FLASHING DON'T WALK	– SEC.	– SEC.	– SEC.	10 SEC.	– SEC.	
MIN PED CLEARANCE	– SEC.	– SEC.	– SEC.	5 SEC.	– SEC.	
TYPE 3 LIMIT	– SEC.	– SEC.	– SEC.	– SEC.	– SEC.	
ALTERNATE EXTENSION	– SEC.	– SEC.	– SEC.	– SEC.	– SEC.	
ADD PER VEHICLE *	– SEC.	– SEC.	– SEC.	– SEC.	– SEC.	
MAXIMUM INITIAL *	– SEC.	– SEC.	– SEC.	– SEC.	– SEC.	
MAXIMUM GAP*	3.0 SEC.	– SEC.	2.0 SEC.	3.0 SEC.	2.0 SEC.	
REDUCE 0.1 SEC EVERY *	– SEC.	– SEC.	– SEC.	– SEC.	– SEC.	
MINIMUM GAP	3.0 SEC.	– SEC.	2.0 SEC.	3.0 SEC.	2.0 SEC.	

* These values may be field adjusted. Do not adjust Min Green and Extension times for phases 2 and 6 lower than what is shown. Min Green for all other phases should not be lower than 4 seconds.

Signal Upgrade - Temporary Design 3 (TMP Phase 1, Steps 11-21)

SEPI ENGINEERING & CONSTRUCTION
1025 Wade Avenue
Raleigh, NC 27605
Tel:919-789-9977
Fax:919-789-9591
License #: C-2197

Prepared for the Offices of:
Transportation Mobility and Safety Division
NORTH CAROLINA DEPARTMENT OF TRANSPORTATION
Signal Design Section
750 N.Greenfield Pkwy,Garner,NC 27529

NC 55 (North Alston Avenue) at Liberty St

Division 5 Durham County Durham

PLAN DATE: September 2014 REVIEWED BY: J Hochanadel
PREPARED BY: R Drayton REVIEWED BY:

REVISIONS	INIT.	DATE

SCALE 0 40 1"=40'

SEAL
NORTH CAROLINA PROFESSIONAL SEAL 28430 ENGINEER JEFFREY P. HOCHANADEL

DocuSigned by: 4/02/15 DATE
5078D2DDF5BC469...
SIG. INVENTORY NO. 05-1029T3

3/20/2015
C:\NCDOT\Documents\TR13.017.00 NCDOT 2012 Traffic LSA\TR13.017.03 (U-3308 Signals)\Traffic\Signals\Design\Signals\TEMP SIGNALS WITH VIDEO\05-1029\05-1029T3.dgn
cloweson

PROJECT REFERENCE NO.	SHEET NO.
U-3308	Sig. 33.1

EDI MODEL 2018ECL-NC CONFLICT MONITOR PROGRAMMING DETAIL

(remove jumpers and set switches as shown)

REMOVE DIODE JUMPERS 2-6, 2-15, 3-8, 3-10, 3-12, 4-8, 4-10, 4-12, 6-15, 8-10, 8-12, and 10-12.

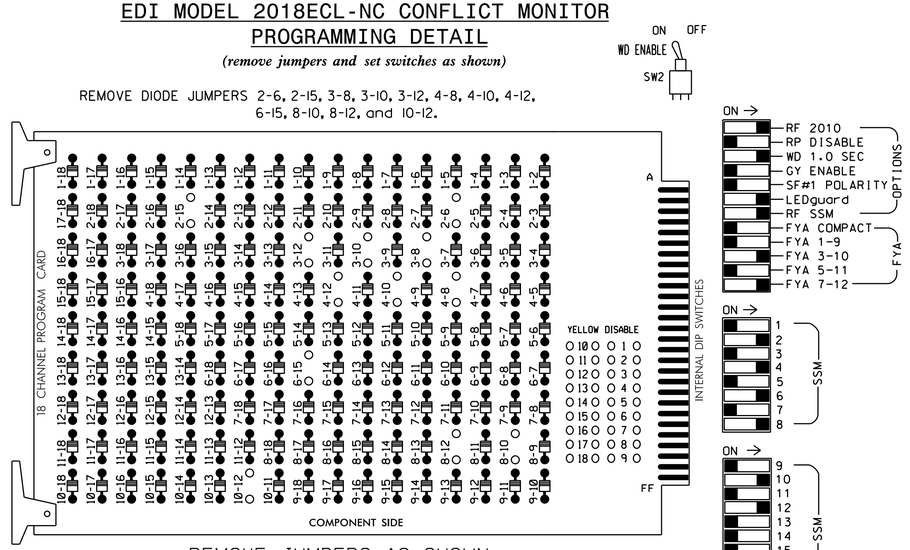

REMOVE JUMPERS AS SHOWN

■ = DENOTES POSITION OF SWITCH

NOTES:

1. Card is provided with all diode jumpers in place. Removal of any jumper allows its channels to run concurrently.
2. Ensure jumpers SEL2-SEL5 and SEL9 are present on the monitor board.
3. Ensure that Red Enable is active at all times during normal operation.
4. Ensure conflict monitor communicates with 2070.

NOTES

1. To prevent "flash-conflict" problems, insert red flash program blocks for all unused vehicle load switches in the output file. Verify that signal heads flash in accordance with the signal plans.
2. Program controller to Start Up in phases 2 and 6 green.
3. Set power-up flash time to 0 seconds within the controller programming. The conflict monitor will govern startup flash. Ensure STARTUP "RED START" is set to 0 seconds.
4. Enable Simultaneous Gap-Out feature for all phases.
5. Program all timing information into phase banks 1, 2, and 3 unless otherwise noted.
6. Set phase bank 3 maximum limit to 250 seconds for phases used.
7. Program phases 4 and 8 for Double Entry.
8. Ensure start up flash phases are coordinated with flash program block assignments.
9. Program Startup Ped Call for phase 6.
10. Set the Red Revert interval on the controller to 1 second.
11. This cabinet and controller are part of the Durham Signal System.

EQUIPMENT INFORMATION

CONTROLLER.....2070E
CABINET.....332 W/ AUX
SOFTWARE.....McCAIN 2033
CABINET MOUNT.....BASE
OUTPUT FILE POSITIONS...18 WITH AUX FILE
LOAD SWITCHES USED.....S2,S4,S5,S8,S9,S11
AUX S2,AUX S5
PHASES USED.....2,3*,4,6,6 PED,8
OVERLAP 1.....NOT USED
OVERLAP 2.....**
OVERLAP 3.....NOT USED
OVERLAP 4.....4+8

* Phase used only during Preempt.
** See FYA PPLT Programming - Sheet 2.

SIGNAL HEAD HOOK-UP CHART

LOAD SWITCH NO.	S1	S2	S3	S4	S5	S6	S7	S8	S9	S10	S11	S12	AUX S1	AUX S2	AUX S3	AUX S4	AUX S5	AUX S6
CMU CHANNEL NO.	1	2	13	3	4	14	5	6	15	7	8	16	9	10	17	11	12	18
PHASE	1	2	2 PED	3	4	4 PED	5	6	6 PED	7	8	8 PED	OL1	OL2	SPARE	OL3	OL4	SPARE
SIGNAL HEAD NO.	NU	22,23	NU	31 ★	42,43	NU	NU	62,63	P61, P62	NU	81,82	NU	NU	31 ★	NU	NU	41 ★	NU
RED		128			101			134			107							
YELLOW		129		*	102			135			108							
GREEN		130			103			136			109							
RED ARROW														A124			A101	
YELLOW ARROW														A125			A102	
FLASHING YELLOW ARROW														A126			A103	
GREEN ARROW				118														
✋									119									
🚶									121									

NU = Not Used

* Denotes install load resistor. See load resistor installation detail this sheet.

★ See pictorial of head wiring in detail below.

FYA SIGNAL WIRING DETAIL

(wire signal heads as shown)

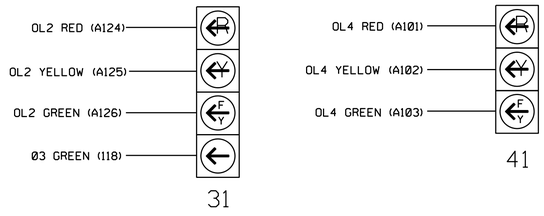

INPUT FILE POSITION LAYOUT

(front view)

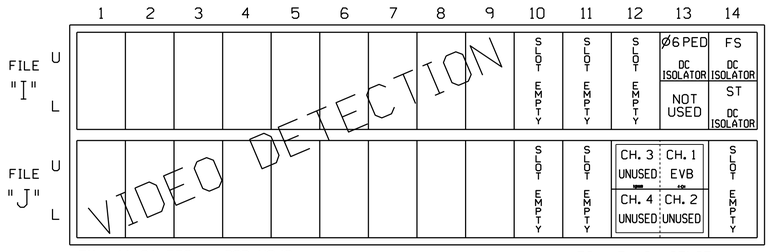

EX.: 1A, 2A, ETC. = LOOP NO.'S

FS = FLASH SENSE
ST = STOP TIME
EVB = EMERGENCY VEHICLE PREEMPT

4 CHANNEL TOMAR OSP CARD
INSERT CARD INTO SLOT J13

INPUT FILE CONNECTION & PROGRAMMING CHART

PED PUSH BUTTONS	LOOP TERMINAL	INPUT FILE POS.	DETECTOR NO.	PIN NO.	ATTRIBUTES	NEMA PHASE
P61,P62	TB8-7,9	I13U	26	68	2	6 PED

NOTE:
INSTALL DC ISOLATOR IN INPUT FILE SLOT I13

DETECTOR ATTRIBUTES LEGEND:

1-FULL TIME DELAY
2-PED CALL
3-RESERVED
4-COUNTING
5-EXTENSION
6-TYPE 3
7-CALLING
8-ALTERNATE

INPUT FILE POSITION LEGEND: J2L
FILE J
SLOT 2
LOWER

TYPICAL TOMAR FIELD WIRE DETAIL

(input file, rear view)

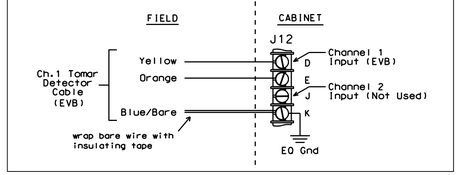

LOAD RESISTOR INSTALLATION DETAIL

ACCEPTABLE VALUES	
VALUE (ohms)	WATTAGE
1.5K - 1.9K	25W (min)
2.0K - 3.0K	10W (min)

PHASE 3 YELLOW FIELD TERMINAL (117)

AC-

THIS ELECTRICAL DETAIL IS FOR THE SIGNAL DESIGN: 05-1029T3
DESIGNED: September 2014
SEALED: 4/2/15
REVISED: N/A

Electrical Detail - Sheet 1 of 2 (Temporary Design 3)

ELECTRICAL AND PROGRAMMING DETAILS FOR:

NC 55 (North Alston Avenue) at Liberty St

Division 5 Durham County Durham

PLAN DATE: November 2014 REVIEWED BY: T. Joyce

PREPARED BY: B. Simmons REVIEWED BY:

REVISIONS	INIT.	DATE

Prepared in the Offices of:
Transportation Mobility and Safety Division
NORTH CAROLINA DEPARTMENT OF TRANSPORTATION
Signals Management Section
750 N.Greenfield Pkwy,Garner,NC 27529

SEAL
NORTH CAROLINA PROFESSIONAL SEAL 022013 ENGINEER GEORGE C. BROWN

DocuSigned by: George C. Brown 4/7/2015
F12601E0D8E8434... DATE

SIG. INVENTORY NO. 05-1029T3

27-MAR-2015 10:40
S:*TISAGM*\TS Signals\Workgroups\Sig Mgmt\Simmons\Working Folder\Electrical Details\Division 05\05I029_sheet1.xxx.dgn
bsimmons

PROJECT REFERENCE NO.	SHEET NO.
U-3308	Sig. 33.2

EMERGENCY VEHICLE PREEMPTION PROGRAMMING

1. Program EVB preempt as follows:
   Main Menu - 2) PREEMPT - 4) EMERGENCY VEHICLE
   EVB Clear = 2
   EVB Clearance Phases = 3,8

2. Program general preemption parameters as follows:
   Main Menu - 2) PREEMPT - 6) MISC PREEMPTION PARAMETERS
   Min Time Before PE ForceOff = 1

3. Ped Clear Before Preempt is a pedestrian timing parameter, and is programmed as follows:
   Main Menu - 1) PHASE - 5) PEDESTRIAN TIMING
   PHASE 6 MIN FDW = 5

Program extend time on optical detector units for 2.0 sec for EVB

FYA PPLT PROGRAMMING (SIGNAL HEAD 31)

1. Program Flashing Yellow Arrow phases as follows:
   Main Menu - 1) PHASE - 2) PHASE FUNCTIONS PAGE TWO
   PPLT FYA = PHASE 3

2. Assign output pin for Flashing Yellow Arrow as follows:
   Main Menu - 6) OUTPUTS - F) FYA PPLT
   Phase 3 = 96

3. Redirect RED and YELLOW outputs for the left turn phases as follows:
   Main Menu - 6) OUTPUTS - 8) REDIRECT PHASE
   Phase 3 RED = 94, Phase 3 YELLOW = 95

SPECIAL NOTE EV PREEMPT PROGRAMMING

Setting 'FYA DURING PREEMPT' to 'Y' eliminates yellow trap when transitioning to preempt from adjacent through phase.
Main Menu - 9) UTILITIES - 9) MISC
FYA DURING PREEMPT (Y/N) = Y

COUNTDOWN PEDESTRIAN SIGNAL OPERATION

Countdown Ped Signals are required to display timing only during Ped Clearance Interval. Consult Ped Signal Module user's manual for instructions on selecting this feature.

MIN WALK DURING PREEMPTION PROGRAMMING

To disable MIN WALK pedestrian timing during preemption, program the controller as follows:
Main Menu - 9) UTILITIES - 5) CONFIGURATION
EXTRA TWO = 3

FLASHER CIRCUIT MODIFICATION DETAIL

In order to insure that signals flash concurrently on the same approach, make the following flasher circuit changes:

1. On rear of PDA - Remove wire from Term. T2-4 and Terminate on T2-2.
2. On rear of PDA - Remove wire from Term. T2-5 and Terminate on T2-3.
3. Remove Flasher Unit 2.

The changes listed above ties all Phases and Overlaps to Flasher Unit 1.

OVERLAP (4) PROGRAMMING DETAIL

Program overlaps as follows:
Main Menu - 4) OVERLAP

Press "+"Three Times

OVERLAP [4]:
LOADSWITCH = 12
VEH SET 1 = 4,8
YELLOW CLEARANCE = 4.4
RED CLEARANCE = 1.4

END OF OVERLAP PROGRAMMING

STARTUP CALLS PROGRAMMING

Prevents Veh Call to phase 3 during Startup. Phase 3 used only during Preempt.
Main Menu - 9) UTILITIES - 1) STARTUP
VEHICLE CALLS 2,4,6,8

OVERLAP GREEN FLASH PROGRAMMING (SIGNAL HEADS 41)

The following will cause the overlap green output to flash, which is wired to the FYA. Program as follows:

Main Menu - 1) PHASE - 2) PHASE FUNCTIONS PAGE TWO
OLAP G FL = 4

THIS ELECTRICAL DETAIL IS FOR THE SIGNAL DESIGN: 05-1029T3
DESIGNED: September 2014
SEALED: 4/2/15
REVISED: N/A

Electrical Detail - Sheet 2 of 2 (Temporary Design 3)

ELECTRICAL AND PROGRAMMING DETAILS FOR:

Prepared in the Offices of:
Transportation Mobility and Safety Division
STATE OF NORTH CAROLINA DEPARTMENT OF TRANSPORTATION
Signals Management Section
750 N.Greenfield Pkwy,Garner,NC 27529

NC 55 (North Alston Avenue) at Liberty St

Division 5 Durham County Durham

PLAN DATE:	November 2014	REVIEWED BY:	T. Joyce
PREPARED BY:	B. Simmons	REVIEWED BY:	

REVISIONS	INIT.	DATE

SEAL
NORTH CAROLINA PROFESSIONAL SEAL 022013 ENGINEER GEORGE C. BROWN

DocuSigned by: George C. Brown 4/7/2015
F12601ED0BEB434 DATE

SIG. INVENTORY NO. 05-1029T3

27-MAR-2015 10:41
S:\TIMSSU\TIS Signals\Workgroups\Sig Man\Simmons\Working Folder\Electrical Details\Division 05\051029_sm_ele_xxx.dgn
bsimmons

DocuSign Envelope ID: 2B82073C-8CA6-44D2-96FA-5BE27AB92A1C

PROJECT REFERENCE NO.	SHEET NO.
U-3308	Sig. 34.0

PHASING DIAGRAM

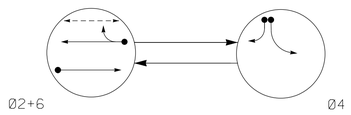

PHASING DIAGRAM DETECTION LEGEND

- DETECTED MOVEMENT
- UNDETECTED MOVEMENT (OVERLAP)
- UNSIGNALIZED MOVEMENT
- PEDESTRIAN MOVEMENT

TABLE OF OPERATION

SIGNAL FACE	PHASE Ø2+6	PHASE Ø4	PHASE FLASH
22,23	G	R	Y
42,43	R	G	R
62,63	G	R	Y
P61,P62	W	DW	DRK

SIGNAL FACE I.D.

All Heads L.E.D.
✳ See Note 7
✳✳ See Note 8

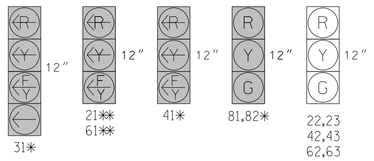

2033 SOFTWARE w/ 2070 CONTROLLER LOOP & DETECTOR UNIT INSTALLATION CHART

INDUCTIVE LOOPS						DETECTOR PROGRAMMING														
							TIMING		ATTRIBUTES									LOOPS	STATUS	
LOOP NO.	SIZE (ft)	TURNS	DIST. FROM STOPBAR (ft)	NEW	EXISTING	NEMA PHASE	DELAY	CARRY (STRETCH)	1 FULL TIME DELAY	2 PEDESTRIAN CALL	3 RESERVED	4 COUNT	5 EXTENSION	6 TYPE 3	7 CALLING	ALTERNATE ✳	SYSTEM	NEW	EXISTING
2A	6x6	✳	70	-	✳	2	- SEC.	- SEC.	-	-	-	-	X	-	X	-	-	-	✳
4A	6x40	✳	0	-	✳	4	3 SEC.	- SEC.	-	-	-	-	X	-	X	-	-	-	✳
4B	6x40	✳	0	-	✳	4	15 SEC.	- SEC.	-	-	-	-	X	-	X	-	-	-	✳
6A	6x6	✳	70	-	✳	6	- SEC.	- SEC.	-	-	-	-	X	-	X	-	-	-	✳
PEDESTRIAN DETECTION																				
P61,P62	N/A	N/A	N/A	-	X	6	- SEC.	- SEC.	-	X	-	-	-	-	-	-	-	-	X

✳ Video Detection Zone

2 Phase Fully Actuated (Durham Signal System)

NOTES

1. Refer to "Road Standard Drawings NCDOT" dated January 2012, "Standard Specifications for Roads and Structures" dated January 2012.
2. Do not program signal for late night flashing operation unless otherwise directed by the Engineer.
3. Set all detector units to presence mode.
4. Program all timing information into phase banks 1,2, and 3 unless otherwise noted.
5. Set phase bank 3 maximum limit to 250 seconds for phases used.
6. Maximum times shown in timing chart are for free-run operation only. Coordinated signal system timing values supersede these values.
7. Disconnect and bag signal heads #31, #41, #81, #82, and optical detector #10 during this phase of construction.
8. Signal heads #21 and #61 and pedestrian signal heads #P21 and #P22 to remain disconnected and bagged during this phase of construction.
9. Contractor shall adjust video detection zones as required.

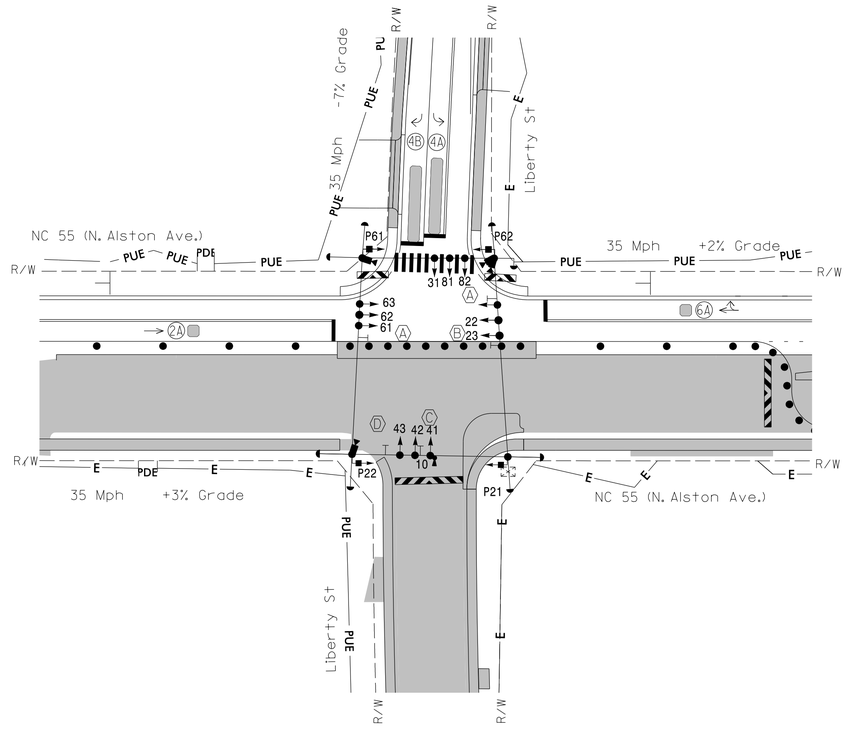

TIMING CHART
2033 SOFTWARE w/2070 CONTROLLER

PHASE	Ø2	Ø4	Ø6
MINIMUM INITIAL *	10 SEC.	7 SEC.	10 SEC.
VEHICLE EXTENSION *	3.0 SEC.	2.0 SEC.	3.0 SEC.
YELLOW CHANGE INT.	3.7 SEC.	3.2 SEC.	3.7 SEC.
RED CLEARANCE	1.4 SEC.	1.9 SEC.	1.6 SEC.
MAXIMUM LIMIT *	50 SEC.	35 SEC.	50 SEC.
RECALL POSITION	VEH. RECALL	NONE	VEH. RECALL
VEHICLE CALL MEMORY	YELLOW LOCK	NONE	YELLOW LOCK
DOUBLE ENTRY	OFF	OFF	OFF
WALK *	- SEC.	- SEC.	4 SEC.
FLASHING DON'T WALK	- SEC.	- SEC.	10 SEC.
MIN PED CLEARANCE	- SEC.	- SEC.	- SEC.
TYPE 3 LIMIT	- SEC.	- SEC.	- SEC.
ALTERNATE EXTENSION	- SEC.	- SEC.	- SEC.
ADD PER VEHICLE *	- SEC.	- SEC.	- SEC.
MAXIMUM INITIAL *	- SEC.	- SEC.	- SEC.
MAXIMUM GAP*	3.0 SEC.	2.0 SEC.	3.0 SEC.
REDUCE 0.1 SEC EVERY *	- SEC.	- SEC.	- SEC.
MINIMUM GAP	3.0 SEC.	2.0 SEC.	3.0 SEC.

* These values may be field adjusted. Do not adjust Min Green and Extension times for phases 2 and 6 lower than what is shown. Min Green for all other phases should not be lower than 4 seconds.

LEGEND

PROPOSED		EXISTING
○→	Traffic Signal Head	●→
◐→	Modified Signal Head	N/A
⊣	Sign	⊣
▯↓	Pedestrian Signal Head With Push Button & Sign	■↓
○—	Signal Pole with Guy	●—
○~	Signal Pole with Sidewalk Guy	●~
▭	Inductive Loop Detector	▭
⊠	Controller & Cabinet	⊠
□	Junction Box	■
·-·-·	2-in Underground Conduit	·-·-·
N/A	Right of Way	
→	Directional Arrow	→
Ⓐ	"No Left Turn" (R3-2)	Ⓐ
Ⓑ	"No Right Turn" (R3-1)	Ⓑ
Ⓒ	"Left Arrow Only" (R3-2)	Ⓒ
Ⓓ	"Right Arrow Only" (R3-1)	Ⓓ
▒	Work Area	N/A
●	Drums	N/A
E	Construction Easement	N/A
PUE	Permanent Utility Easment	N/A
PDE	Permanent Drainage Easment	N/A
▨	Barricades	N/A
—	Direct Bury	- - - - -
⊶	Optical Detector	●—
▭→	Video Detector	■→
▭	Video Detection Area	▭

Signal Upgrade - Temporary Design 4 (TMP Phase 1, Steps 11-21)

SEPI ENGINEERING & CONSTRUCTION
1025 Wade Avenue
Raleigh, NC 27605
Tel:919-789-9977
Fax:919-789-9591
License #: C-2197

Prepared for the Offices of:
Transportation Mobility and Safety Division
NORTH CAROLINA DEPARTMENT OF TRANSPORTATION
Signal Design Section
750 N.Greenfield Pkwy,Garner,NC 27529

NC 55 (North Alston Avenue) at Liberty St

Division 5 Durham County Durham

PLAN DATE: September 2014 REVIEWED BY: J Hochanadel
PREPARED BY: R Drayton REVIEWED BY:

SCALE 0 40 1"=40'

REVISIONS	INIT.	DATE

SEAL
NORTH CAROLINA PROFESSIONAL SEAL 28430 ENGINEER JEFFREY P. HOCHANADEL

DocuSigned by: 4/02/15
5078102BF98C498...
DATE

SIG. INVENTORY NO. 05-1029T4

3/20/2015
D:\NCDOT\Projects\TIP\R3.017.00 NCDOT 2012 Traffic LSA\TIP\R3.017.03 (U-3308 Signals)\Traffic\Signals\Design\Signals\TEMP SIGNALS WITH VIDEO\05-1029\05-1029T4.dgn
clowson

PROJECT REFERENCE NO.	SHEET NO.
U-3308	Sig. 34.1

EDI MODEL 2018ECL-NC CONFLICT MONITOR PROGRAMMING DETAIL

(remove jumpers and set switches as shown)

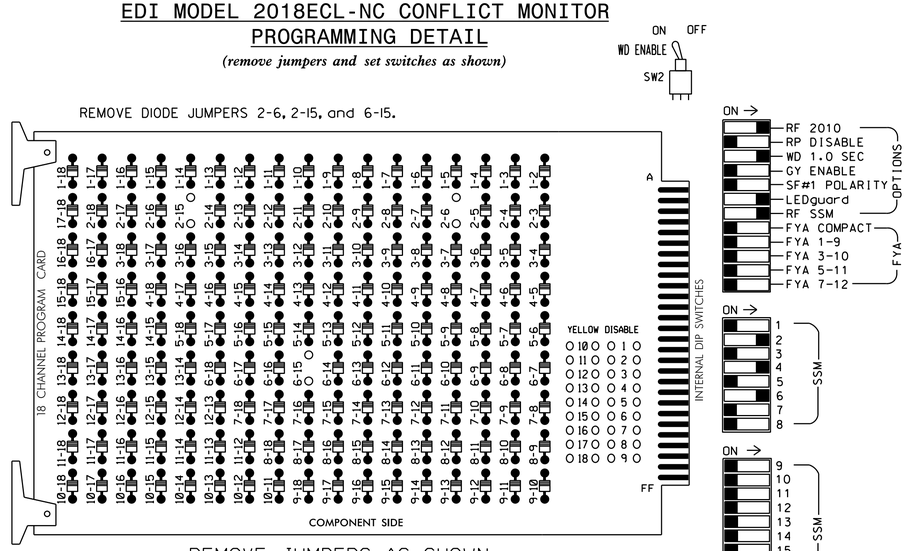

REMOVE JUMPERS AS SHOWN

NOTES:

1. Card is provided with all diode jumpers in place. Removal of any jumper allows its channels to run concurrently.
2. Ensure jumpers SEL2-SEL5 and SEL9 are present on the monitor board.
3. Ensure that Red Enable is active at all times during normal operation.
4. Ensure conflict monitor communicates with 2070.

■ = DENOTES POSITION OF SWITCH

NOTES

1. To prevent "flash-conflict" problems, insert red flash program blocks for all unused vehicle load switches in the output file. Verify that signal heads flash in accordance with the signal plans.
2. Program controller to Start Up in phases 2 and 6 green.
3. Set power-up flash time to 0 seconds within the controller programming. The conflict monitor will govern startup flash. Ensure STARTUP "RED START" is set to 0 seconds.
4. Enable Simultaneous Gap-Out feature for all phases.
5. Program all timing information into phase banks 1, 2, and 3 unless otherwise noted.
6. Set phase bank 3 maximum limit to 250 seconds for phases used.
7. Ensure start up flash phases are coordinated with flash program block assignments.
8. Program Startup Ped Call for phase 6.
9. Set the Red Revert interval on the controller to 1 second.
10. This cabinet and controller are part of the Durham Signal System.

SIGNAL HEAD HOOK-UP CHART

LOAD SWITCH NO.	S1	S2	S3	S4	S5	S6	S7	S8	S9	S10	S11	S12	AUX S1	AUX S2	AUX S3	AUX S4	AUX S5	AUX S6
CMU CHANNEL NO.	1	2	13	3	4	14	5	6	15	7	8	16	9	10	17	11	12	18
PHASE	1	2	2 PED	3	4	4 PED	5	6	6 PED	7	8	8 PED	OL1	OL2	SPARE	OL3	OL4	SPARE
SIGNAL HEAD NO.	NU	22,23	NU	NU	42,43	NU	NU	62,63	P61, P62	NU	NU	NU	NU	NU	NU	NU	NU	NU
RED		128			101			134										
YELLOW		129			102			135										
GREEN		130			103			136										
RED ARROW																		
YELLOW ARROW																		
FLASHING YELLOW ARROW																		
GREEN ARROW																		
✋									119									
🚶									121									

NU = Not Used

★ See pictorial of head wiring in detail below.

EQUIPMENT INFORMATION

CONTROLLER.....2070E
CABINET.....332 W/ AUX
SOFTWARE.....McCAIN 2033
CABINET MOUNT.....BASE
OUTPUT FILE POSITIONS...18 WITH AUX FILE
LOAD SWITCHES USED.....S2,S5,S8,S9
PHASES USED.....2,4,6,6 PED
OVERLAP 1.....NOT USED
OVERLAP 2.....NOT USED
OVERLAP 3.....NOT USED
OVERLAP 4.....NOT USED

COUNTDOWN PEDESTRIAN SIGNAL OPERATION

Countdown Ped Signals are required to display timing only during Ped Clearance Interval. Consult Ped Signal Module user's manual for instructions on selecting this feature.

INPUT FILE POSITION LAYOUT

(front view)

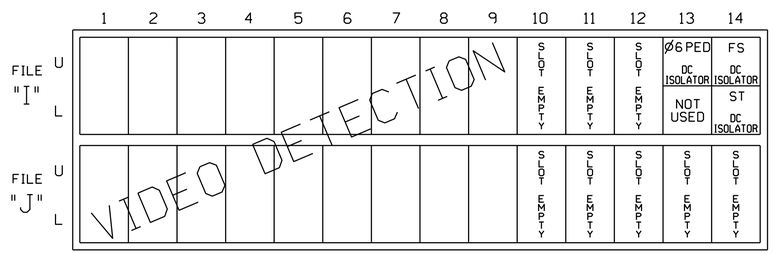

EX.: 1A, 2A, ETC. = LOOP NO.'S

FS = FLASH SENSE
ST = STOP TIME

INPUT FILE CONNECTION & PROGRAMMING CHART

PED PUSH BUTTONS	LOOP TERMINAL	INPUT FILE POS.	DETECTOR NO.	PIN NO.	ATTRIBUTES	NEMA PHASE
P61,P62	TB8-7,9	I13U	26	68	2	6 PED

NOTE:
INSTALL DC ISOLATOR IN INPUT FILE SLOT I13

DETECTOR ATTRIBUTES LEGEND:

1-FULL TIME DELAY
2-PED CALL
3-RESERVED
4-COUNTING
5-EXTENSION
6-TYPE 3
7-CALLING
8-ALTERNATE

INPUT FILE POSITION LEGEND: J2L

FILE J
SLOT 2
LOWER

THIS ELECTRICAL DETAIL IS FOR
THE SIGNAL DESIGN: 05-1029T4
DESIGNED: September 2014
SEALED: 4/2/15
REVISED: N/A

Electrical Detail - Temporary Design 4

ELECTRICAL AND PROGRAMMING DETAILS FOR:

Prepared in the Offices of:
Transportation Mobility and Safety Division
NORTH CAROLINA DEPARTMENT OF TRANSPORTATION
Signal Management Section
750 N.Greenfield Pkwy,Garner,NC 27529

NC 55 (North Alston Avenue)
at
Liberty St

Division 5 | Durham County | Durham

PLAN DATE: November 2014	REVIEWED BY: T. Joyce
PREPARED BY: B. Simmons	REVIEWED BY:

REVISIONS	INIT.	DATE

SEAL
NORTH CAROLINA PROFESSIONAL SEAL 022013 ENGINEER GEORGE C. BROWN

DocuSigned by: George C. Brown 4/7/2015
F12601E0B8E434...

SIG. INVENTORY NO. 05-1029T4

27-MAR-2015 10:42
S:\TSSGUM\TIS Signal\Workgroups\Sig Mgmt\Simmons\Working Folder\Electrical Details\Division 05\051029_sm_ele_xxx.dgn
bsimmons

DocuSign Envelope ID: 2B82073C-8CA6-44D2-96FA-5BE27AB92A1C

PROJECT REFERENCE NO.	SHEET NO.
U-3308	Sig. 35.0

2 Phase Fully Actuated W/ EV Preemption (Durham Signal System)

PHASING DIAGRAM

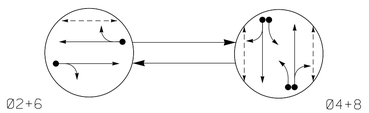

PHASING DIAGRAM DETECTION LEGEND

- DETECTED MOVEMENT
- UNDETECTED MOVEMENT (OVERLAP)
- UNSIGNALIZED MOVEMENT
- PEDESTRIAN MOVEMENT

EV Preempt Phases

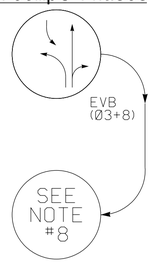

TABLE OF OPERATION

SIGNAL FACE	PHASE Ø2+6	Ø4+8	EVB	FLASH
22,23	G	R	R	Y
31	~~R~~	FY	←	~~R~~
41	~~R~~	FY	~~FY~~	~~R~~
42,43	R	G	R	R
62,63	G	R	R	Y
81,82	R	G	G	R
P41,P42	DW	W	DW	DRK
P61,P62	W	DW	DW	DRK
P81,P82	DW	W	DW	DRK

SIGNAL FACE I.D.

All Heads L.E.D.
✳ See Note 10
✳✳ See Note 11

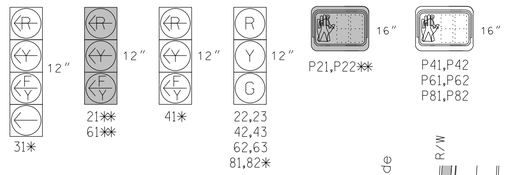

2033 EV PREEMPTION

FUNCTION	EVB (SECONDS)
DELAY BEFORE PREEMPT	0
MIN. PED. CLEAR BEFORE PREEMPT	✳
MIN. GREEN BEFORE PREEMPT	1
CLEARANCE TIME	2
PREEMPT EXTEND**	2.0

✳ See Timing Chart for Min Ped Clearance
** Program Timing on Optical Detector Unit

2033 SOFTWARE w/ 2070 CONTROLLER LOOP & DETECTOR UNIT INSTALLATION CHART

INDUCTIVE LOOPS						DETECTOR PROGRAMMING																
							TIMING		ATTRIBUTES											LOOPS	STATUS	
									1	2	3	4	5	6	7	8				
LOOP NO.	SIZE (ft)	TURNS	DIST. FROM STOPBAR (ft)	NEW	EXISTING	NEMA PHASE	DELAY	CARRY (STRETCH)	FULL TIME	DELAY PEDESTRIAN CALL	RESERVED	COUNT	EXTENSION	TYPE 3	CALLING	ALTERNATE ✳	SYSTEM	NEW	EXISTING
2A	6x6	✳	70	-	✳	2	- SEC.	- SEC.	-	-	-	-	X	-	X	-	-	-	✳
4A	6x40	✳	0	-	✳	4	3 SEC.	- SEC.	-	-	-	-	X	-	X	-	-	-	✳
4B	6x40	✳	0	-	✳	4	10 SEC.	- SEC.	-	-	-	-	X	-	X	-	-	-	✳
6A	6x6	✳	70	-	✳	6	- SEC.	- SEC.	-	-	-	-	X	-	X	-	-	-	✳
8A	6x40	✳	0	✳	-	8	3 SEC.	- SEC.	-	-	-	-	X	-	X	-	-	-	✳
8B	6x40	✳	0	✳	-	8	10 SEC.	- SEC.	-	-	-	-	X	-	X	-	-	-	✳
PEDESTRIAN DETECTION																			
P41,P42	N/A	N/A	N/A	X	-	4	- SEC.	- SEC.	-	X	-	-	-	-	-	-	-	X	-
P61,P62	N/A	N/A	N/A	-	X	6	- SEC.	- SEC.	-	X	-	-	-	-	-	-	-	-	X
P81,P82	N/A	N/A	N/A	X	-	8	- SEC.	- SEC.	-	X	-	-	-	-	-	-	-	X	-

✳ Video Detection Zone

NOTES

1. Refer to "Road Standard Drawings NCDOT" dated January 2012, "Standard Specifications for Roads and Structures" dated January 2012.
2. Do not program signal for late night flashing operation unless otherwise directed by the Engineer.
4. Set all detector units to presence mode.
5. Program all timing information into phase banks 1,2, and 3 unless otherwise noted.
6. Set phase bank 3 maximum limit to 250 seconds for phases used.
7. This intersection features an optical preemption system. Shown locations of optical detectors are conceptual only.
8. Upon completion of Emergency Vehicle Preemption, controller returns to normal operation.
9. Maximum times shown in timing chart are for free-run operation only. Coordinated signal system timing values supersede these values.
10. Reconnect and unbag signal heads #31, #41, #81, #82 and optical detector #10 during this phase of construction.
11. Signal heads #21 and #61 and pedestrian signal heads #P21 and #P22 to remain disconnected and bagged during this phase of construction.
12. Contractor shall adjust video detection zones as required.

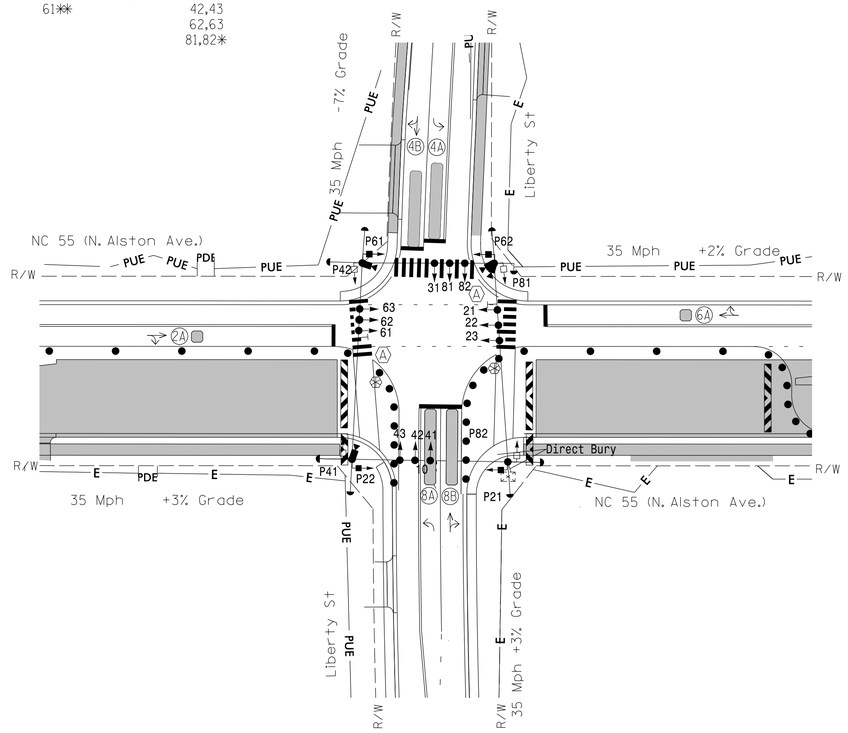

TIMING CHART
2033 SOFTWARE w/2070 CONTROLLER

PHASE	Ø2	Ø3	Ø4	Ø6	Ø8	OL4
MINIMUM INITIAL *	10 SEC.	- SEC.	7 SEC.	10 SEC.	7 SEC.	0 SEC.
VEHICLE EXTENSION *	3.0 SEC.	- SEC.	2.0 SEC.	3.0 SEC.	2.0 SEC.	
YELLOW CHANGE INT.	3.7 SEC.	4.4 SEC.	4.4 SEC.	3.7 SEC.	4.4 SEC.	4.4 SEC.
RED CLEARANCE	1.8 SEC.	2.1 SEC.	1.4 SEC.	1.9 SEC.	1.4 SEC.	1.4 SEC.
MAXIMUM LIMIT *	50 SEC.	35 SEC.	35 SEC.	50 SEC.	35 SEC.	
RECALL POSITION	VEH. RECALL	NONE	NONE	VEH. RECALL	NONE	
VEHICLE CALL MEMORY	YELLOW LOCK	NONE	NONE	YELLOW LOCK	NONE	
DOUBLE ENTRY	OFF	OFF	ON	OFF	ON	
WALK *	- SEC.	- SEC.	4 SEC.	4 SEC.	4 SEC.	
FLASHING DON'T WALK	- SEC.	- SEC.	19 SEC.	10 SEC.	20 SEC.	
MIN PED CLEARANCE	- SEC.	- SEC.	10 SEC.	5 SEC.	10 SEC.	
TYPE 3 LIMIT	- SEC.	- SEC.	- SEC.	- SEC.	- SEC.	
ALTERNATE EXTENSION	- SEC.	- SEC.	- SEC.	- SEC.	- SEC.	
ADD PER VEHICLE *	- SEC.	- SEC.	- SEC.	- SEC.	- SEC.	
MAXIMUM INITIAL *	- SEC.	- SEC.	- SEC.	- SEC.	- SEC.	
MAXIMUM GAP*	3.0 SEC.	- SEC.	2.0 SEC.	3.0 SEC.	2.0 SEC.	
REDUCE 0.1 SEC EVERY *	- SEC.	- SEC.	- SEC.	- SEC.	- SEC.	
MINIMUM GAP	3.0 SEC.	- SEC.	2.0 SEC.	3.0 SEC.	2.0 SEC.	

* These values may be field adjusted. Do not adjust Min Green and Extension times for phases 2 and 6 lower than what is shown. Min Green for all other phases should not be lower than 4 seconds.

LEGEND

PROPOSED		EXISTING
○→	Traffic Signal Head	●→
◐→	Modified Signal Head	N/A
⊣	Sign	⊣
▯↓	Pedestrian Signal Head With Push Button & Sign	■↓
○—	Signal Pole with Guy	●—
○~	Signal Pole with Sidewalk Guy	●~
▭	Inductive Loop Detector	▭
⊠	Controller & Cabinet	⊠
□	Junction Box	■
·-·-·	2-in Underground Conduit	·-·-·
N/A	Right of Way	
→	Directional Arrow	→
Ⓐ	"No Left Turn" (R3-2)	Ⓐ
▬	Work Area	N/A
●	Drums	N/A
E	Construction Easement	N/A
PUE	Permanent Utility Easment	N/A
PDE	Permanent Drainage Easment	N/A
▨	Barricades	N/A
———	Direct Bury	----------
◇	Optical Detector	◆
▭	Video Detector	■
▭	Video Detection Area	▭
⊛	Type I Pushbutton Post	☢

Signal Upgrade - Temporary Design 5 (TMP Phase 1, Steps 11-21)

SEPI ENGINEERING & CONSTRUCTION
1025 Wade Avenue
Raleigh, NC 27605
Tel:919-789-9977
Fax:919-789-9591
License #: C-2197

Prepared for the Offices of:
Transportation Mobility and Safety Division
NORTH CAROLINA DEPARTMENT OF TRANSPORTATION
Signal Design Section
750 N.Greenfield Pkwy,Garner,NC 27529

NC 55 (North Alston Avenue) at Liberty St

Division 5 Durham County Durham

PLAN DATE: September 2014 REVIEWED BY: J Hochanadel
PREPARED BY: R Drayton REVIEWED BY:

SCALE 0 40 1"=40'

REVISIONS	INIT.	DATE

SEAL
NORTH CAROLINA PROFESSIONAL SEAL 28430 ENGINEER JEFFREY P. HOCHANADEL

DocuSigned by: 4/02/15
5078102EF98C498...
DATE

SIG. INVENTORY NO. 05-1029T5

3/20/2015
C:\NCDOT\Transportation\TIP\R13.017.00 NCDOT 2012 Traffic LSA\TIP\R13.017.03 (U-3308 Signals)\Traffic\Signals\Design\Signals\TEMP SIGNALS WITH VIDEO\05-1029405-1029405-102915.dgn
clowson

EDI MODEL 2018ECL-NC CONFLICT MONITOR PROGRAMMING DETAIL

(remove jumpers and set switches as shown)

REMOVE DIODE JUMPERS 2-6, 2-15, 3-8, 3-10, 3-12, 4-8, 4-10, 4-12, 4-14, 4-16, 6-15, 8-10, 8-12, 8-14, 8-16, 10-12, 10-14, 10-16, 12-14, 12-16 and 14-16.

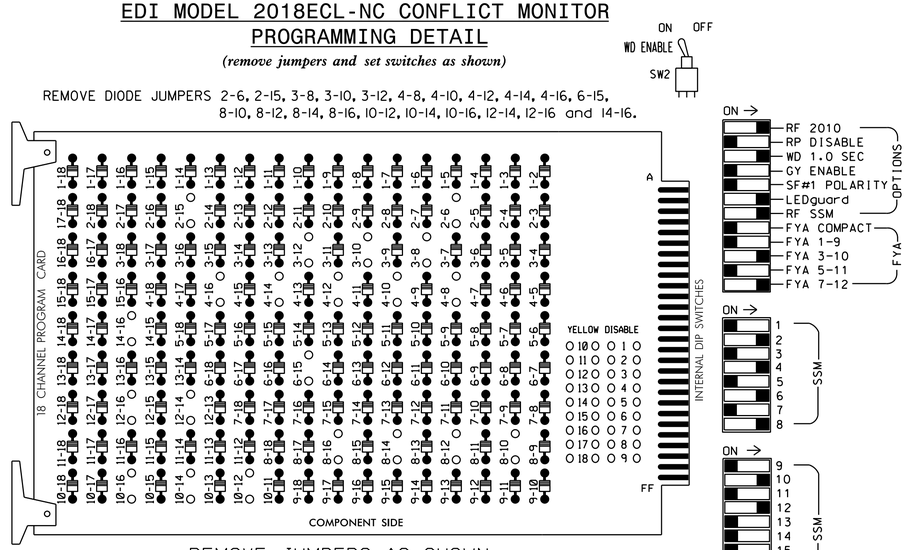

■ = DENOTES POSITION OF SWITCH

REMOVE JUMPERS AS SHOWN

NOTES:

1. Card is provided with all diode jumpers in place. Removal of any jumper allows its channels to run concurrently.
2. Ensure jumpers SEL2-SEL5 and SEL9 are present on the monitor board.
3. Ensure that Red Enable is active at all times during normal operation.
4. Ensure conflict monitor communicates with 2070.

NOTES

1. To prevent "flash-conflict" problems, insert red flash program blocks for all unused vehicle load switches in the output file. Verify that signal heads flash in accordance with the signal plans.
2. Program controller to Start Up in phases 2 and 6 green.
3. Set power-up flash time to 0 seconds within the controller programming. The conflict monitor will govern startup flash. Ensure STARTUP "RED START" is set to 0 seconds.
4. Enable Simultaneous Gap-Out feature for all phases.
5. Program all timing information into phase banks 1, 2, and 3 unless otherwise noted.
6. Set phase bank 3 maximum limit to 250 seconds for phases used.
7. Program phases 4 and 8 for Double Entry.
8. Ensure start up flash phases are coordinated with flash program block assignments.
9. Program Startup Ped Calls for phases 4, 6 and 8.
10. Set the Red Revert interval on the controller to 1 second.
11. This cabinet and controller are part of the Durham Signal System.

EQUIPMENT INFORMATION

CONTROLLER.....2070E
CABINET.....332 W/ AUX
SOFTWARE.....McCAIN 2033
CABINET MOUNT.....BASE
OUTPUT FILE POSITIONS...18 WITH AUX FILE
LOAD SWITCHES USED.....S2,S4,S5,S6,S8,S9,S11,S12
AUX S2,AUX S5
PHASES USED.....2,3*,4,4 PED,6,6 PED,8,8 PED
OVERLAP 1.....NOT USED
OVERLAP 2.....**
OVERLAP 3.....NOT USED
OVERLAP 4.....4+8

* Phase used only during Preempt.
** See FYA PPLT Programming - Sheet 2.

PROJECT REFERENCE NO.	SHEET NO.
U-3308	Sig. 35.1

SIGNAL HEAD HOOK-UP CHART

LOAD SWITCH NO.	S1	S2	S3	S4	S5	S6	S7	S8	S9	S10	S11	S12	AUX S1	AUX S2	AUX S3	AUX S4	AUX S5	AUX S6
CMU CHANNEL NO.	1	2	13	3	4	14	5	6	15	7	8	16	9	10	17	11	12	18
PHASE	1	2	2 PED	3	4	4 PED	5	6	6 PED	7	8	8 PED	OL1	OL2	SPARE	OL3	OL4	SPARE
SIGNAL HEAD NO.	NU	22,23	NU	31 ★	42,43	P41, P42	NU	62,63	P61, P62	NU	81,82	P81, P82	NU	31 ★	NU	NU	41 ★	NU
RED		128			101			134			107							
YELLOW		129		*	102			135			108							
GREEN		130			103			136			109							
RED ARROW														A124			A101	
YELLOW ARROW														A125			A102	
FLASHING YELLOW ARROW														A126			A103	
GREEN ARROW				118														
✋						104			119			110						
🚶						106			121			112						

NU = Not Used

* Denotes install load resistor. See load resistor installation detail this sheet.

★ See pictorial of head wiring in detail below.

FYA SIGNAL WIRING DETAIL

(wire signal heads as shown)

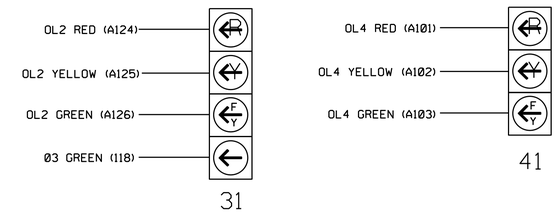

INPUT FILE POSITION LAYOUT

(front view)

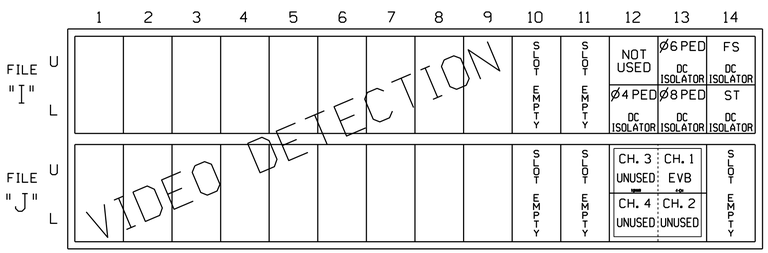

EX.: 1A, 2A, ETC. = LOOP NO.'S

FS = FLASH SENSE
ST = STOP TIME
EVB = EMERGENCY VEHICLE PREEMPT

4 CHANNEL TOMAR OSP CARD
INSERT CARD INTO SLOT J13

INPUT FILE CONNECTION & PROGRAMMING CHART

PED PUSH BUTTONS	LOOP TERMINAL	INPUT FILE POS.	DETECTOR NO.	PIN NO.	ATTRIBUTES	NEMA PHASE
P41,P42	TB8-5,6	I12L	27	69	2	4 PED
P61,P62	TB8-7,9	I13U	26	68	2	6 PED
P81,P82	TB8-8,9	I13L	28	70	2	8 PED

NOTE:
INSTALL DC ISOLATORS IN INPUT FILE SLOTS I12 AND I13

DETECTOR ATTRIBUTES LEGEND:

1-FULL TIME DELAY
2-PED CALL
3-RESERVED
4-COUNTING
5-EXTENSION
6-TYPE 3
7-CALLING
8-ALTERNATE

INPUT FILE POSITION LEGEND: J2L

FILE J
SLOT 2
LOWER

TYPICAL TOMAR FIELD WIRE DETAIL

(input file, rear view)

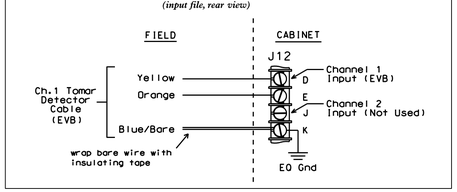

LOAD RESISTOR INSTALLATION DETAIL

ACCEPTABLE VALUES	
VALUE (ohms)	WATTAGE
1.5K - 1.9K	25W (min)
2.0K - 3.0K	10W (min)

PHASE 3 YELLOW FIELD TERMINAL (117)

AC-

THIS ELECTRICAL DETAIL IS FOR THE SIGNAL DESIGN: 05-1029T5
DESIGNED: September 2014
SEALED: 4/2/15
REVISED: N/A

Electrical Detail - Sheet 1 of 2 (Temporary Design 5)

ELECTRICAL AND PROGRAMMING DETAILS FOR:

NC 55 (North Alston Avenue) at Liberty St

Division 5 | Durham County | Durham

PLAN DATE: November 2014 | REVIEWED BY: T. Joyce

PREPARED BY: B. Simmons | REVIEWED BY:

REVISIONS	INIT.	DATE

Prepared in the Offices of:
Transportation Mobility and Safety Division
NORTH CAROLINA DEPARTMENT OF TRANSPORTATION
Signal Management Section
750 N.Greenfield Pkwy,Garner,NC 27529

SEAL
NORTH CAROLINA PROFESSIONAL SEAL 022013 ENGINEER GEORGE C. BROWN

DocuSigned by: George C. Brown 4/7/2015
F12001E0BEB434... DATE

SIG. INVENTORY NO. 05-1029T5

24-APR-2015 10:32
S:\Traffic\Signals\Workgroups\Sig Mgmt\Simmons\051029_sm.ele,20150407-dgn
bsimmons

PROJECT REFERENCE NO.	SHEET NO.
U-3308	Sig. 35.2

EMERGENCY VEHICLE PREEMPTION PROGRAMMING

1. Program EVB preempt as follows:
   Main Menu - 2) PREEMPT - 4) EMERGENCY VEHICLE
   EVB Clear = 2
   EVB Clearance Phases = 3,8

2. Program general preemption parameters as follows:
   Main Menu - 2) PREEMPT - 6) MISC PREEMPTION PARAMETERS
   Min Time Before PE ForceOff = 1

3. Ped Clear Before Preempt is a pedestrian timing parameter, and is programmed as follows:
   Main Menu - 1) PHASE - 5) PEDESTRIAN TIMING
   PHASE 4 MIN FDW = 10
   PHASE 6 MIN FDW = 5
   PHASE 8 MIN FDW = 10

Program extend time on optical detector units for 2.0 sec for EVB

FYA PPLT PROGRAMMING (SIGNAL HEAD 31)

1. Program Flashing Yellow Arrow phases as follows:
   Main Menu - 1) PHASE - 2) PHASE FUNCTIONS PAGE TWO
   PPLT FYA = PHASE 3

2. Assign output pin for Flashing Yellow Arrow as follows:
   Main Menu - 6) OUTPUTS - F) FYA PPLT
   Phase 3 = 96

3. Redirect RED and YELLOW outputs for the left turn phases as follows:
   Main Menu - 6) OUTPUTS - 8) REDIRECT PHASE
   Phase 3 RED = 94, Phase 3 YELLOW = 95

SPECIAL NOTE EV PREEMPT PROGRAMMING

Setting 'FYA DURING PREEMPT' to 'Y' eliminates yellow trap when transitioning to preempt from adjacent through phase.
Main Menu - 9) UTILITIES - 9) MISC
FYA DURING PREEMPT (Y/N) = Y

COUNTDOWN PEDESTRIAN SIGNAL OPERATION

Countdown Ped Signals are required to display timing only during Ped Clearance Interval. Consult Ped Signal Module user's manual for instructions on selecting this feature.

MIN WALK DURING PREEMPTION PROGRAMMING

To disable MIN WALK pedestrian timing during preemption, program the controller as follows:
Main Menu - 9) UTILITIES - 5) CONFIGURATION
EXTRA TWO = 3

FLASHER CIRCUIT MODIFICATION DETAIL

In order to insure that signals flash concurrently on the same approach, make the following flasher circuit changes:

1. On rear of PDA - Remove wire from Term. T2-4 and Terminate on T2-2.
2. On rear of PDA - Remove wire from Term. T2-5 and Terminate on T2-3.
3. Remove Flasher Unit 2.

The changes listed above ties all Phases and Overlaps to Flasher Unit 1.

OVERLAP (4) PROGRAMMING DETAIL

Program overlaps as follows:
Main Menu - 4) OVERLAP

Press "+"Three Times

OVERLAP [4]:
LOADSWITCH = 12
VEH SET 1 = 4,8
YELLOW CLEARANCE = 4.4
RED CLEARANCE = 1.4

END OF OVERLAP PROGRAMMING

STARTUP CALLS PROGRAMMING

Prevents Veh Call to phase 3 during Startup. Phase 3 used only during Preempt.
Main Menu - 9) UTILITIES - 1) STARTUP
VEHICLE CALLS 2,4,6,8

OVERLAP GREEN FLASH PROGRAMMING (SIGNAL HEAD 41)

The following will cause the overlap green output to flash, which is wired to the FYA. Program as follows:

Main Menu - 1) PHASE - 2) PHASE FUNCTIONS PAGE TWO
OLAP G FL = 4

THIS ELECTRICAL DETAIL IS FOR
THE SIGNAL DESIGN: 05-1029T5
DESIGNED: September 2014
SEALED: 4/2/15
REVISED: N/A

Electrical Detail - Sheet 2 of 2 (Temporary Design 5)

ELECTRICAL AND PROGRAMMING DETAILS FOR:

Prepared in the Offices of:
Transportation Mobility and Safety Division
STATE OF NORTH CAROLINA
DEPARTMENT OF TRANSPORTATION
Signals Management Section
750 N.Greenfield Pkwy,Garner,NC 27529

NC 55 (North Alston Avenue) at Liberty St

Division 5 Durham County Durham

PLAN DATE:	November 2014	REVIEWED BY:	T. Joyce
PREPARED BY:	B. Simmons	REVIEWED BY:	

REVISIONS	INIT.	DATE

SEAL
NORTH CAROLINA PROFESSIONAL SEAL 022013 ENGINEER GEORGE C. BROWN

DocuSigned by: George C. Brown 4/7/2015
F12601EDGBEB434 DATE

SIG. INVENTORY NO. 05-1029T5

27-MAR-2015 10:43
S:\TIMSUM\TIS Signals\Workgroups\Sig Man\Simmons\Working Folder\Electrical Details\Division 05\051029_sm_ele_xxx.dgn
bsimmons

DocuSign Envelope ID: 2B82073C-8CA6-44D2-96FA-5BE27AB92A1C

PROJECT REFERENCE NO.	SHEET NO.
U-3308	Sig. 36.0

2 Phase Fully Actuated W/ EV Preemption (Durham Signal System)

PHASING DIAGRAM

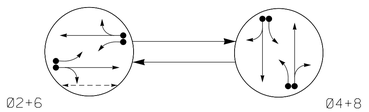

PHASING DIAGRAM DETECTION LEGEND

- DETECTED MOVEMENT
- UNDETECTED MOVEMENT (OVERLAP)
- UNSIGNALIZED MOVEMENT
- PEDESTRIAN MOVEMENT

EV Preempt Phases

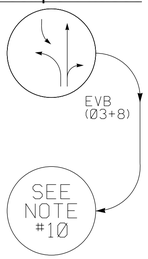

TABLE OF OPERATION

SIGNAL FACE	PHASE Ø2+6	Ø4+8	EVB	FLASH
21	~~G~~	~~R~~	~~R~~	~~Y~~
22,23	G	R	R	Y
31	~~R~~	~~G~~	←	~~R~~
41	~~R~~	~~G~~	~~G~~	~~R~~
42,43	R	G	R	R
61	~~G~~	~~R~~	~~R~~	~~Y~~
62,63	G	R	R	Y
81,82	R	G	G	R
P21,P22	W	DW	DW	DRK

2033 EV PREEMPTION

FUNCTION	EVB (SECONDS)
DELAY BEFORE PREEMPT	0
MIN. PED. CLEAR BEFORE PREEMPT	*
MIN. GREEN BEFORE PREEMPT	1
CLEARANCE TIME	2
PREEMPT EXTEND**	2.0

* See Timing Chart for Min Ped Clearance
** Program Timing on Optical Detector Unit

SIGNAL FACE I.D.

All Heads L.E.D.
* See Note 12
** See Note 13

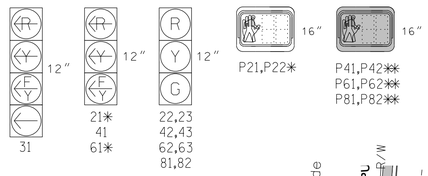

2033 SOFTWARE w/ 2070 CONTROLLER LOOP & DETECTOR UNIT INSTALLATION CHART

INDUCTIVE LOOPS						DETECTOR PROGRAMMING																	
							TIMING		ATTRIBUTES											LOOPS	STATUS	
									1	2	3	4	5	6	7	8					
LOOP NO.	SIZE (ft)	TURNS	DIST. FROM STOPBAR (ft)	NEW	EXISTING	NEMA PHASE	DELAY	CARRY (STRETCH)	FULL TIME DELAY	PEDESTRIAN CALL	RESERVED	COUNT	EXTENSION	TYPE 3	CALLING	ALTERNATE	SYSTEM	NEW	EXISTING
2A	6x6	*	70	*	-	2	- SEC.	- SEC.	-	-	-	-	X	-	X	-	-	-	*
2B	6x40	*	0	*	-	2	- SEC.	- SEC.	-	-	-	-	X	-	X	-	-	-	*
4A	6x40	*	0	*	-	4	3 SEC.	- SEC.	-	-	-	-	X	-	X	-	-	-	*
4B	6x40	*	0	*	-	4	10 SEC.	- SEC.	-	-	-	-	X	-	X	-	-	-	*
6A	6x6	*	70	*	-	6	- SEC.	- SEC.	-	-	-	-	X	-	X	-	-	-	*
6B	6x40	*	0	*	-	6	- SEC.	- SEC.	-	-	-	-	X	-	X	-	-	-	*
8A	6x40	*	0	*	-	8	3 SEC.	- SEC.	-	-	-	-	X	-	X	-	-	-	*
8B	6x40	*	0	*	-	8	10 SEC.	- SEC.	-	-	-	-	X	-	X	-	-	-	*
PEDESTRIAN DETECTION																							
P21,P22	N/A	N/A	N/A	X	-	2	- SEC.	- SEC.	-	X	-	-	-	-	-	-	-	-	X

* Video Detection Zone

NOTES

1. Refer to "Road Standard Drawings NCDOT" dated January 2012, "Standard Specifications for Roads and Structures" dated January 2012.
2. Do not program signal for late night flashing operation unless otherwise directed by the Engineer.
3. Reposition signal heads numbered #21, #22, #23, 61, 62, and #63 during this phase of construction.
4. Set all detector units to presence mode.
5. Program all timing information into phase banks 1,2, and 3 unless otherwise noted.
6. Set phase bank 3 maximum limit to 250 seconds for phases used.
7. Omit "WALK" and flashing "DON'T WALK" with no pedestrian calls.
8. Program pedestrian heads to countdown the flashing "Don't Walk" time.
9. This intersection features an optical preemption system. Shown locations of optical detectors are conceptual only.
10. Upon completion of Emergency Vehicle Preemption, controller returns to normal operation.
11. Maximum times shown in timing chart are for free-run operation only. Coordinated signal system timing values supersede these values.
12. Reconnect and unbag signal heads #21, #61, and pedestrian signal heads #P21 and #P22 during this phase of construction.
13. Disconnect and bag pedestrian signal heads #P41, #P42, #P61, #P62, #P81, and #P82 during this phase of construction.
14. Contractor shall adjust video detection areas as required.

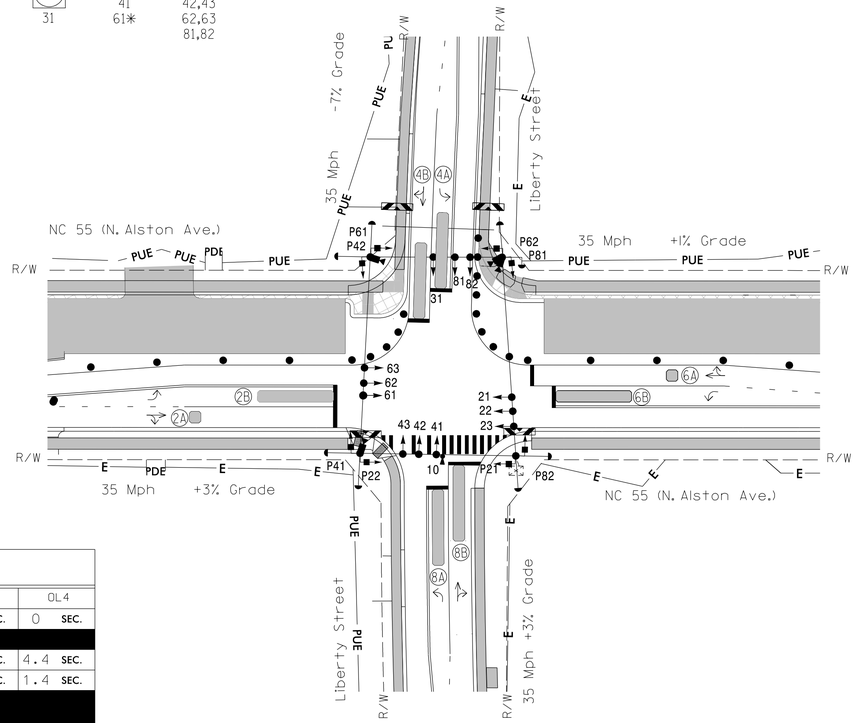

TIMING CHART
2033 SOFTWARE w/2070 CONTROLLER

PHASE	Ø2	Ø3	Ø4	Ø6	Ø8	OL1	OL3	OL4
MINIMUM INITIAL *	10 SEC.	- SEC.	7 SEC.	10 SEC.	7 SEC.	0 SEC.	0 SEC.	0 SEC.
VEHICLE EXTENSION *	3.0 SEC.	- SEC.	2.0 SEC.	3.0 SEC.	2.0 SEC.			
YELLOW CHANGE INT.	3.8 SEC.	4.4 SEC.	4.4 SEC.	3.8 SEC.	4.4 SEC.	3.8 SEC.	3.8 SEC.	4.4 SEC.
RED CLEARANCE	1.8 SEC.	2.1 SEC.	1.4 SEC.	1.8 SEC.	1.4 SEC.	1.8 SEC.	1.8 SEC.	1.4 SEC.
MAXIMUM LIMIT *	50 SEC.	35 SEC.	35 SEC.	50 SEC.	35 SEC.			
RECALL POSITION	VEH. RECALL	NONE	NONE	VEH. RECALL	NONE			
VEHICLE CALL MEMORY	YELLOW LOCK	NONE	NONE	YELLOW LOCK	NONE			
DOUBLE ENTRY	OFF	OFF	ON	OFF	ON			
WALK *	4 SEC.	- SEC.	- SEC.	- SEC.	- SEC.			
FLASHING DON'T WALK	14 SEC.	- SEC.	- SEC.	- SEC.	- SEC.			
MIN PED CLEARANCE	7 SEC.	- SEC.	- SEC.	- SEC.	- SEC.			
TYPE 3 LIMIT	- SEC.	- SEC.	- SEC.	- SEC.	- SEC.			
ALTERNATE EXTENSION	- SEC.	- SEC.	- SEC.	- SEC.	- SEC.			
ADD PER VEHICLE *	- SEC.	- SEC.	- SEC.	- SEC.	- SEC.			
MAXIMUM INITIAL *	- SEC.	- SEC.	- SEC.	- SEC.	- SEC.			
MAXIMUM GAP*	3.0 SEC.	- SEC.	2.0 SEC.	3.0 SEC.	2.0 SEC.			
REDUCE 0.1 SEC EVERY *	- SEC.	- SEC.	- SEC.	- SEC.	- SEC.			
MINIMUM GAP	3.0 SEC.	- SEC.	2.0 SEC.	3.0 SEC.	2.0 SEC.			

* These values may be field adjusted. Do not adjust Min Green and Extension times for phases 2 and 6 lower than what is shown. Min Green for all other phases should not be lower than 4 seconds.

LEGEND

PROPOSED		EXISTING
○→	Traffic Signal Head	●→
◐→	Modified Signal Head	N/A
⊣	Sign	⊣
□↓	Pedestrian Signal Head With Push Button & Sign	■↓
○→	Signal Pole with Guy	●→
○↓	Signal Pole with Sidewalk Guy	●↓
▭	Inductive Loop Detector	▭
⊠	Controller & Cabinet	⊠
□	Junction Box	■
-·-·-·-	2-in Underground Conduit	-·-·-·-
N/A	Right of Way	N/A
→	Directional Arrow	→
▭	Work Area	N/A
●	Drums	N/A
E	Construction Easement	N/A
PUE	Permanent Utility Easment	N/A
PDE	Permanent Drainage Easment	N/A
▨	Barricades	N/A
———	Direct Bury	----------
◁	Optical Detector	◀
▭◁	Video Detector	▬◀
▭	Video Detection Area	▭

Signal Upgrade - Temporary Design 6 (TMP Phase 2, Steps 1-6)

SEPI ENGINEERING & CONSTRUCTION
1025 Wade Avenue
Raleigh, NC 27605
Tel:919-789-9977
Fax:919-789-9591
License #: C-2197

Prepared for the Offices of:
Transportation Mobility and Safety Division
Signal Design Section
750 N.Greenfield Pkwy,Garner,NC 27529

NC 55 (North Alston Avenue) at Liberty St
Division 5 Durham County Durham
PLAN DATE: September 2014 REVIEWED BY: J Hochanadel
PREPARED BY: R Drayton REVIEWED BY:

REVISIONS	INIT.	DATE

SCALE 0 40 1"=40'

SEAL
NORTH CAROLINA PROFESSIONAL SEAL 28430 ENGINEER JEFFREY P. HOCHANADEL
DocuSigned by: 4/02/15 DATE
SIG. INVENTORY NO. 05-1029T6

3/20/2015
G:\Traffic\Projects\Transportation\TR13.017-00 NCDOT 2012 Traffic LS&M\TR13.017-03 (U-3308 Signals)\Traffic\Signals\Design\Signals\TEMP SIGNALS WITH VIDEO\05-1029\05-1029T6.dgn
Clawson

PROJECT REFERENCE NO.	SHEET NO.
U-3308	Sig. 36.1

EDI MODEL 2018ECL-NC CONFLICT MONITOR PROGRAMMING DETAIL

(remove jumpers and set switches as shown)

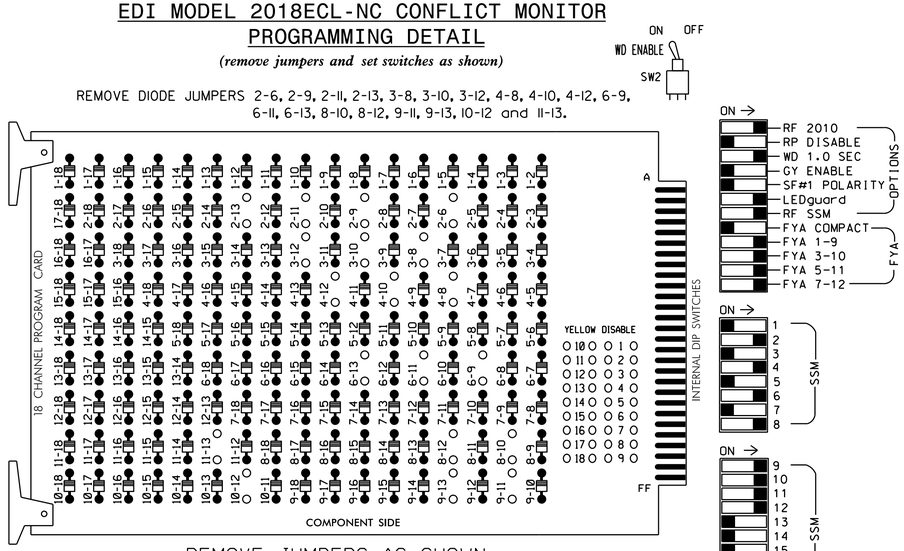

REMOVE JUMPERS AS SHOWN

NOTES:

1. Card is provided with all diode jumpers in place. Removal of any jumper allows its channels to run concurrently.
2. Ensure jumpers SEL2-SEL5 and SEL9 are present on the monitor board.
3. Ensure that Red Enable is active at all times during normal operation.
4. Ensure conflict monitor communicates with 2070.

NOTES

1. To prevent "flash-conflict" problems, insert red flash program blocks for all unused vehicle load switches in the output file. Verify that signal heads flash in accordance with the signal plans.
2. Program controller to Start Up in phases 2 and 6 green.
3. Set power-up flash time to 0 seconds within the controller programming. The conflict monitor will govern startup flash. Ensure STARTUP "RED START" is set to 0 seconds.
4. Enable Simultaneous Gap-Out feature for all phases.
5. Program all timing information into phase banks 1, 2, and 3 unless otherwise noted.
6. Set phase bank 3 maximum limit to 250 seconds for phases used.
7. Program phases 4 and 8 for Double Entry.
8. Ensure start up flash phases are coordinated with flash program block assignments.
9. Program Startup Ped Call for phase 2.
10. Set the Red Revert interval on the controller to 1 second.
11. This cabinet and controller are part of the Durham Signal System.

EQUIPMENT INFORMATION

```
CONTROLLER.............2070E
CABINET................332 W/ AUX
SOFTWARE...............McCAIN 2033
CABINET MOUNT..........BASE
OUTPUT FILE POSITIONS...18 WITH AUX FILE
LOAD SWITCHES USED.....S2,S3,S4,S5,S8,S11
                       AUX S1,AUX S2,AUX S4,AUX S5
PHASES USED............2,2 PED,3*,4,6,8
OVERLAP 1..............2+6
OVERLAP 2..............**
OVERLAP 3..............2+6
OVERLAP 4..............4+8
```

* Phase used only during Preempt.
** See FYA PPLT Programming - Sheet 2.

SIGNAL HEAD HOOK-UP CHART

LOAD SWITCH NO.	S1	S2	S3	S4	S5	S6	S7	S8	S9	S10	S11	S12	AUX S1	AUX S2	AUX S3	AUX S4	AUX S5	AUX S6
CMU CHANNEL NO.	1	2	13	3	4	14	5	6	15	7	8	16	9	10	17	11	12	18
PHASE	1	2	2 PED	3	4	4 PED	5	6	6 PED	7	8	8 PED	OL1	OL2	SPARE	OL3	OL4	SPARE
SIGNAL HEAD NO.	NU	22,23	P21, P22	31 ★	42,43	NU	NU	62,63	NU	NU	81,82	NU	61 ★	31 ★	NU	21 ★	41 ★	NU
RED		128			101			134			107							
YELLOW		129		✳	102			135			108							
GREEN		130			103			136			109							
RED ARROW													A121	A124		A114	A101	
YELLOW ARROW													A122	A125		A115	A102	
FLASHING YELLOW ARROW													A123	A126		A116	A103	
GREEN ARROW				118														
✋			113															
🚶			115															

NU = Not Used

✳ Denotes install load resistor. See load resistor installation detail this sheet.

★ See pictorial of head wiring in detail below.

FYA SIGNAL WIRING DETAIL

(wire signal heads as shown)

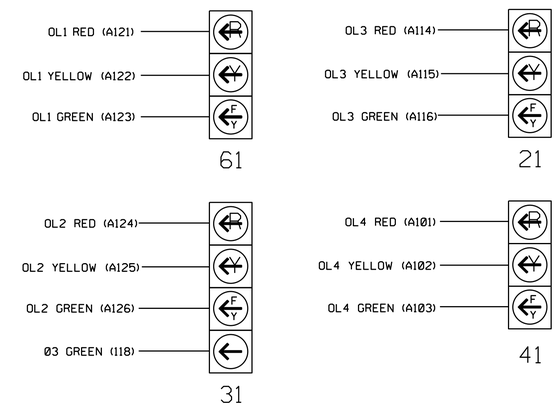

INPUT FILE POSITION LAYOUT

(front view)

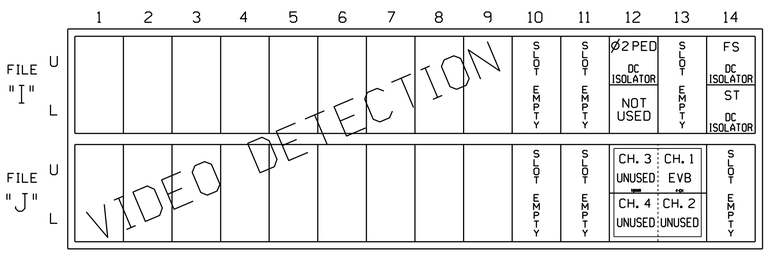

EX.: 1A, 2A, ETC. = LOOP NO.'S

FS = FLASH SENSE
ST = STOP TIME
EVB = EMERGENCY VEHICLE PREEMPT

4 CHANNEL TOMAR OSP CARD
INSERT CARD INTO SLOT J13

INPUT FILE CONNECTION & PROGRAMMING CHART

PED PUSH BUTTONS	LOOP TERMINAL	INPUT FILE POS.	DETECTOR NO.	PIN NO.	ATTRIBUTES	NEMA PHASE
P21,P22	TB8-4,6	I12U	25	67	2	2 PED

NOTE:
INSTALL DC ISOLATOR IN INPUT FILE SLOT I12

DETECTOR ATTRIBUTES LEGEND:

1-FULL TIME DELAY
2-PED CALL
3-RESERVED
4-COUNTING
5-EXTENSION
6-TYPE 3
7-CALLING
8-ALTERNATE

INPUT FILE POSITION LEGEND: J2L
FILE J
SLOT 2
LOWER

TYPICAL TOMAR FIELD WIRE DETAIL

(input file, rear view)

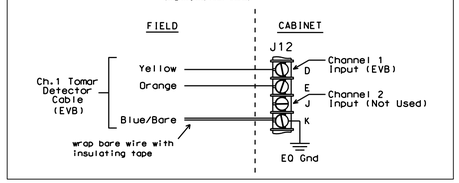

LOAD RESISTOR INSTALLATION DETAIL

ACCEPTABLE VALUES	
VALUE (ohms)	WATTAGE
1.5K - 1.9K	25W (min)
2.0K - 3.0K	10W (min)

PHASE 3 YELLOW FIELD TERMINAL (117)

AC-

THIS ELECTRICAL DETAIL IS FOR THE SIGNAL DESIGN: 05-1029T6
DESIGNED: September 2014
SEALED: 4/2/15
REVISED: N/A

Electrical Detail - Sheet 1 of 2 (Temporary Design 6)

ELECTRICAL AND PROGRAMMING DETAILS FOR:

NC 55 (North Alston Avenue) at Liberty St

Division 5 | Durham County | Durham

PLAN DATE: November 2014 | REVIEWED BY: T. Joyce

PREPARED BY: B. Simmons | REVIEWED BY:

REVISIONS	INIT.	DATE

Prepared in the Offices of:
Transportation Mobility and Safety Division
NORTH CAROLINA DEPARTMENT OF TRANSPORTATION
Signals Management Section
750 N.Greenfield Pkwy.Garner,NC 27529

SEAL
NORTH CAROLINA PROFESSIONAL SEAL 022013 ENGINEER GEORGE C. BROWN

DocuSigned by: George C. Brown 4/7/2015
F12601E0DBEB434 DATE

SIG. INVENTORY NO. 05-1029T6

27 MAR 2015 10:14
S:\#TISSUE\#TIS Signals\#Workgroups\#Sig Mgmt\#Simmons\#Working Folder\#Electrical Details\#Division 05\#051029_smele_xxx.dgn
bsimmons

PROJECT REFERENCE NO.	SHEET NO.
U-3308	Sig. 36.2

EMERGENCY VEHICLE PREEMPTION PROGRAMMING

1. Program EVB preempt as follows:
   Main Menu - 2) PREEMPT - 4) EMERGENCY VEHICLE
   EVB Clear = 2
   EVB Clearance Phases = 3,8

2. Program general preemption parameters as follows:
   Main Menu - 2) PREEMPT - 6) MISC PREEMPTION PARAMETERS
   Min Time Before PE ForceOff = 1

3. Ped Clear Before Preempt is a pedestrian timing parameter, and is programmed as follows:
   Main Menu - 1) PHASE - 5) PEDESTRIAN TIMING
   PHASE 2 MIN FDW = 7

Program extend time on optical detector units for 2.0 sec for EVB

FYA PPLT PROGRAMMING (SIGNAL HEAD 31)

1. Program Flashing Yellow Arrow phases as follows:
   Main Menu - 1) PHASE - 2) PHASE FUNCTIONS PAGE TWO
   PPLT FYA = PHASE 3

2. Assign output pin for Flashing Yellow Arrow as follows:
   Main Menu - 6) OUTPUTS - F) FYA PPLT
   Phase 3 = 96

3. Redirect RED and YELLOW outputs for the left turn phases as follows:
   Main Menu - 6) OUTPUTS - 8) REDIRECT PHASE
   Phase 3 RED = 94, Phase 3 YELLOW = 95

SPECIAL NOTE EV PREEMPT PROGRAMMING

Setting 'FYA DURING PREEMPT' to 'Y' eliminates yellow trap when transitioning to preempt from adjacent through phase.
Main Menu - 9) UTILITIES - 9) MISC
FYA DURING PREEMPT (Y/N) = Y

COUNTDOWN PEDESTRIAN SIGNAL OPERATION

Countdown Ped Signals are required to display timing only during Ped Clearance Interval. Consult Ped Signal Module user's manual for instructions on selecting this feature.

MIN WALK DURING PREEMPTION PROGRAMMING

To disable MIN WALK pedestrian timing during preemption, program the controller as follows:
Main Menu - 9) UTILITIES - 5) CONFIGURATION
EXTRA TWO = 3

FLASHER CIRCUIT MODIFICATION DETAIL

In order to insure that signals flash concurrently on the same approach, make the following flasher circuit changes:

1. On rear of PDA - Remove wire from Term. T2-4 and Terminate on T2-2.
2. On rear of PDA - Remove wire from Term. T2-5 and Terminate on T2-3.
3. Remove Flasher Unit 2.

The changes listed above ties all Phases and Overlaps to Flasher Unit 1.

OVERLAPS (1), (3) & (4) PROGRAMMING DETAIL

Program overlaps as follows:
Main Menu - 4) OVERLAP

OVERLAP [1]:
LOADSWITCH = 9
VEH SET 1 = 2,6
YELLOW CLEARANCE = 3.8
RED CLEARANCE = 1.8

Press "+" Twice

OVERLAP [3]:
LOADSWITCH = 11
VEH SET 1 = 2,6
YELLOW CLEARANCE = 3.8
RED CLEARANCE = 1.8

Press "+"

OVERLAP [4]:
LOADSWITCH = 12
VEH SET 1 = 4,8
YELLOW CLEARANCE = 4.4
RED CLEARANCE = 1.4

END OF OVERLAP PROGRAMMING

STARTUP CALLS PROGRAMMING

Prevents Veh Call to phase 3 during Startup. Phase 3 used only during Preempt.
Main Menu - 9) UTILITIES - 1) STARTUP
VEHICLE CALLS 2,4,6,8

OVERLAP GREEN FLASH PROGRAMMING (SIGNAL HEAD 21, 41 & 61)

The following will cause the overlap green output to flash, which is wired to the FYA. Program as follows:

Main Menu - 1) PHASE - 2) PHASE FUNCTIONS PAGE TWO
OLAP G FL = 1, 3, 4

THIS ELECTRICAL DETAIL IS FOR THE SIGNAL DESIGN: 05-1029T6
DESIGNED: September 2014
SEALED: 4/2/15
REVISED: N/A

Electrical Detail - Sheet 2 of 2 (Temporary Design 6)

ELECTRICAL AND PROGRAMMING DETAILS FOR:

Prepared in the Offices of:
Transportation Mobility and Safety Division
STATE OF NORTH CAROLINA
DEPARTMENT OF TRANSPORTATION
Signals Management Section
750 N.Greenfield Pkwy,Garner,NC 27529

NC 55 (North Alston Avenue) at Liberty St

Division 5 Durham County Durham

PLAN DATE:	November 2014	REVIEWED BY:	T. Joyce
PREPARED BY:	B. Simmons	REVIEWED BY:	

REVISIONS	INIT.	DATE

SEAL
NORTH CAROLINA PROFESSIONAL SEAL 022013 ENGINEER GEORGE C. BROWN

DocuSigned by: George C. Brown 4/7/2015
F12601EDGBE8434 DATE

SIG. INVENTORY NO. 05-1029T6

27-MAR-2015 10:44
S:\TIS\SU\TIS Signals\Workgroups\Sig Man\Simmons\Working Folder\Electrical Details\Division 05\051029_sm_ele_xxx.dgn
bsimmons

DocuSign Envelope ID: 2B82073C-8CA6-44D2-96FA-5BE27AB92A1C

PROJECT REFERENCE NO.	SHEET NO.
U-3308	Sig. 37.0

2 Phase Fully Actuated W/ EV Preemption (Durham Signal System)

PHASING DIAGRAM

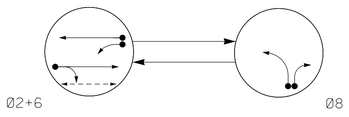

PHASING DIAGRAM DETECTION LEGEND

- DETECTED MOVEMENT
- UNDETECTED MOVEMENT (OVERLAP)
- UNSIGNALIZED MOVEMENT
- PEDESTRIAN MOVEMENT

EV Preempt Phases

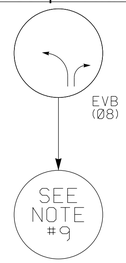

TABLE OF OPERATION

SIGNAL FACE	PHASE Ø2+6	PHASE Ø8	PHASE EVB	PHASE FLASH
22,23	G	R	R	Y
61	~~F Y~~	~~R~~	~~R~~	~~Y~~
62,63	G	R	R	Y
82,83	R	G	G	R
P21,P22	W	DW	DW	DRK

SIGNAL FACE I.D.

All Heads L.E.D.
* See Note 11
** See Note 12

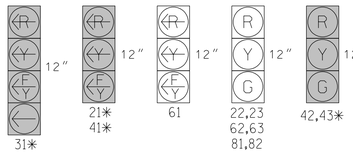

2033 SOFTWARE w/ 2070 CONTROLLER LOOP & DETECTOR UNIT INSTALLATION CHART

INDUCTIVE LOOPS						DETECTOR PROGRAMMING															
							TIMING		ATTRIBUTES										STATUS	
LOOP NO.	SIZE (ft)	TURNS	DIST. FROM STOPBAR (ft)	NEW	EXISTING	NEMA PHASE	DELAY	CARRY (STRETCH)	1 FULL TIME DELAY	2 PEDESTRIAN CALL	3 RESERVED	4 COUNT	5 EXTENSION	6 TYPE 3	7 CALLING	8 ALTERNATE	SYSTEM LOOPS	NEW	EXISTING
2A	6x6	*	70	-	*	2	- SEC.	- SEC.	-	-	-	-	X	-	X	-	-	-	*
6A	6x6	*	70	-	*	6	- SEC.	- SEC.	-	-	-	-	X	-	X	-	-	-	*
6B	6x40	*	0	-	*	6	- SEC.	- SEC.	-	-	-	-	X	-	X	-	-	-	*
8A	6x40	*	0	-	*	8	3 SEC.	- SEC.	-	-	-	-	X	-	X	-	-	-	*
8B	6x40	*	0	-	*	8	15 SEC.	- SEC.	-	-	-	-	X	-	X	-	-	-	*
PEDESTRIAN DETECTION																				
P21,P22	N/A	N/A	N/A	-	X	2	- SEC.	- SEC.	-	X	-	-	-	-	-	-	-	-	-	X

* Video Detection Zone

NOTES

1. Refer to "Road Standard Drawings NCDOT" dated January 2012, "Standard Specifications for Roads and Structures" dated January 2012.
2. Do not program signal for late night flashing operation unless otherwise directed by the Engineer.
3. Set all detector units to presence mode.
4. Program all timing information into phase banks 1,2, and 3 unless otherwise noted.
5. Set phase bank 3 maximum limit to 250 seconds for phases used.
6. Omit "WALK" and flashing "DON'T WALK" with no pedestrian calls.
7. Program pedestrian heads to countdown the flashing "Don't Walk" time.
8. This intersection features an optical preemption system. Shown locations of optical detectors are conceptual only.
9. Upon completion of Emergency Vehicle Preemption, controller returns to normal operation.
10. Maximum times shown in timing chart are for free-run operation only. Coordinated signal system timing values supersede these values.
11. Disconnect and bag signal heads #21, #31, #41, #42, and #43 during this phase of construction.
12. Pedestrian signal heads #P41, #P42, #P61, #P62, #P81 and #P82 to remain disconnected and bagged during this phase of construction.
13. Contractor shall adjust video detection zones as required.

2033 EV PREEMPTION

FUNCTION	EVB (SECONDS)
DELAY BEFORE PREEMPT	0
MIN. PED. CLEAR BEFORE PREEMPT	*
MIN. GREEN BEFORE PREEMPT	1
CLEARANCE TIME	2
PREEMPT EXTEND**	2.0

* See Timing Chart for Min Ped Clearance
** Program Timing on Optical Detector Unit

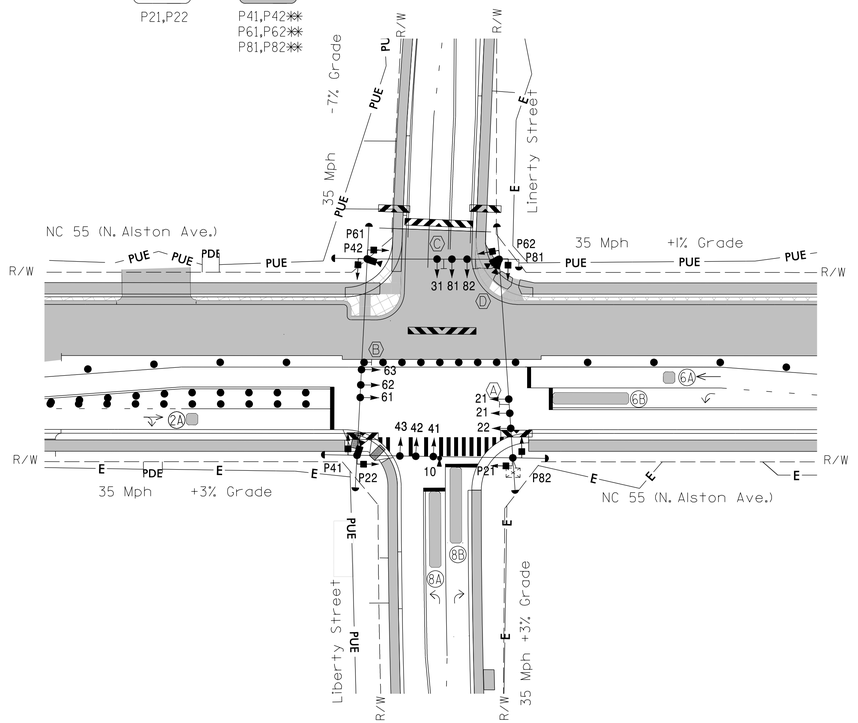

LEGEND

PROPOSED		EXISTING
○→	Traffic Signal Head	●→
◐→	Modified Signal Head	N/A
⊣	Sign	⊣
□	Pedestrian Signal Head With Push Button & Sign	■
○	Signal Pole with Guy	●
○	Signal Pole with Sidewalk Guy	●
▭	Inductive Loop Detector	▭
⊠	Controller & Cabinet	⊡
□	Junction Box	■
----------	2-in Underground Conduit	----------
N/A	Right of Way	
→	Directional Arrow	→
Ⓐ	"No Left Turn" (R3-2)	Ⓐ
Ⓑ	"No Right Turn" (R3-1)	Ⓑ
Ⓒ	"Left Arrow Only" (R3-2)	Ⓒ
Ⓓ	"Right Arrow Only" (R3-1)	Ⓓ
▬	Work Area	N/A
●	Drums	N/A
E	Construction Easement	N/A
PUE	Permanent Utility Easment	N/A
PDE	Permanent Drainage Easment	N/A
▨	Barricades	N/A
----------	Direct Bury	----------
⊲	Optical Detector	◀
▭⊲	Video Detector	▬
▭	Video Detection Area	▭

TIMING CHART
2033 SOFTWARE w/2070 CONTROLLER

PHASE	02	06	08	OL1
MINIMUM INITIAL *	10 SEC.	10 SEC.	7 SEC.	0 SEC.
VEHICLE EXTENSION *	3.0 SEC.	3.0 SEC.	2.0 SEC.	
YELLOW CHANGE INT.	3.8 SEC.	3.8 SEC.	3.0 SEC.	3.8 SEC.
RED CLEARANCE	1.8 SEC.	1.8 SEC.	2.1 SEC.	1.8 SEC.
MAXIMUM LIMIT *	50 SEC.	50 SEC.	35 SEC.	
RECALL POSITION	VEH. RECALL	VEH. RECALL	NONE	
VEHICLE CALL MEMORY	YELLOW LOCK	YELLOW LOCK	NONE	
DOUBLE ENTRY	OFF	OFF	OFF	
WALK *	4 SEC.	- SEC.	- SEC.	
FLASHING DON'T WALK	14 SEC.	- SEC.	- SEC.	
MIN PED CLEARANCE	7 SEC.	- SEC.	- SEC.	
TYPE 3 LIMIT	- SEC.	- SEC.	- SEC.	
ALTERNATE EXTENSION	- SEC.	- SEC.	- SEC.	
ADD PER VEHICLE *	- SEC.	- SEC.	- SEC.	
MAXIMUM INITIAL *	- SEC.	- SEC.	- SEC.	
MAXIMUM GAP*	3.0 SEC.	3.0 SEC.	2.0 SEC.	
REDUCE 0.1 SEC EVERY *	- SEC.	- SEC.	- SEC.	
MINIMUM GAP	3.0 SEC.	3.0 SEC.	2.0 SEC.	

* These values may be field adjusted. Do not adjust Min Green and Extension times for phases 2 and 6 lower than what is shown. Min Green for all other phases should not be lower than 4 seconds.

Signal Upgrade - Temporary Design 7 (TMP Phase 2, Steps 1-6)

SEPI ENGINEERING & CONSTRUCTION
1025 Wade Avenue
Raleigh, NC 27605
Tel:919-789-9977
Fax:919-789-9591
License #: C-2197

Prepared for the Offices of:
Transportation Mobility and Safety Division
Signal Design Section
750 N.Greenfield Pkwy.Garner,NC 27529

NC 55 (North Alston Avenue) at Liberty St

Division 5 Durham County Durham
PLAN DATE: September 2014 REVIEWED BY: J Hochanadel
PREPARED BY: R Drayton REVIEWED BY:

SCALE 0 40 1"=40'

REVISIONS	INIT.	DATE

SEAL
NORTH CAROLINA PROFESSIONAL SEAL 28430 ENGINEER JEFFREY P. HOCHANADEL

DocuSigned by: 4/02/15 DATE
SIG. INVENTORY NO. 05-102917

3/26/2015
G:\#Projects\Corridor\Corridor\TIP\R13.017.00 NCDOT 2012 Traffic LSA\TIP\R13.017.03 (U-3308 Signals)\Traffic\Signals\Design\Signals\TEMP SIGNALS WITH VIDEO\405-102905-102917.dgn
Clawson

PROJECT REFERENCE NO.	SHEET NO.
U-3308	Sig. 37.1

EDI MODEL 2018ECL-NC CONFLICT MONITOR PROGRAMMING DETAIL

(remove jumpers and set switches as shown)

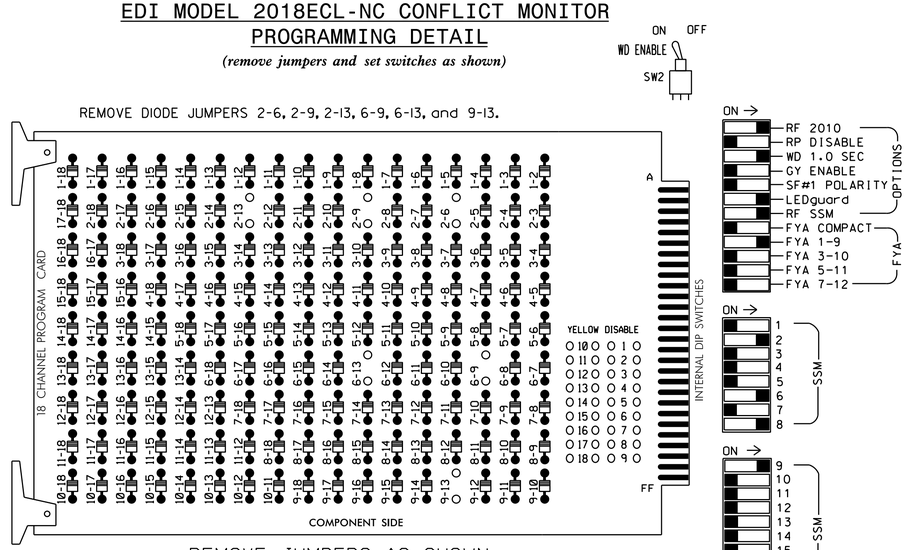

REMOVE JUMPERS AS SHOWN

■ = DENOTES POSITION OF SWITCH

NOTES:

1. Card is provided with all diode jumpers in place. Removal of any jumper allows its channels to run concurrently.
2. Ensure jumpers SEL2-SEL5 and SEL9 are present on the monitor board.
3. Ensure that Red Enable is active at all times during normal operation.
4. Ensure conflict monitor communicates with 2070.

NOTES

1. To prevent "flash-conflict" problems, insert red flash program blocks for all unused vehicle load switches in the output file. Verify that signal heads flash in accordance with the signal plans.
2. Program controller to Start Up in phases 2 and 6 green.
3. Set power-up flash time to 0 seconds within the controller programming. The conflict monitor will govern startup flash. Ensure STARTUP "RED START" is set to 0 seconds.
4. Enable Simultaneous Gap-Out feature for all phases.
5. Program all timing information into phase banks 1, 2, and 3 unless otherwise noted.
6. Set phase bank 3 maximum limit to 250 seconds for phases used.
7. Ensure start up flash phases are coordinated with flash program block assignments.
8. Program Startup Ped Call for phase 2.
9. Set the Red Revert interval on the controller to 1 second.
10. This cabinet and controller are part of the Durham Signal System.

SIGNAL HEAD HOOK-UP CHART

LOAD SWITCH NO.	S1	S2	S3	S4	S5	S6	S7	S8	S9	S10	S11	S12	AUX S1	AUX S2	AUX S3	AUX S4	AUX S5	AUX S6
CMU CHANNEL NO.	1	2	13	3	4	14	5	6	15	7	8	16	9	10	17	11	12	18
PHASE	1	2	2 PED	3	4	4 PED	5	6	6 PED	7	8	8 PED	OL1	OL2	SPARE	OL3	OL4	SPARE
SIGNAL HEAD NO.	NU	22,23	P21, P22	NU	NU	NU	NU	62,63	NU	NU	81,82	NU	61 ★	NU	NU	NU	NU	NU
RED		128						134			107							
YELLOW		129						135			108							
GREEN		130						136			109							
RED ARROW													A121					
YELLOW ARROW													A122					
FLASHING YELLOW ARROW													A123					
GREEN ARROW																		
✋			113															
🚶			115															

NU = Not Used

★ See pictorial of head wiring in detail below.

EQUIPMENT INFORMATION

CONTROLLER.....2070E
CABINET.....332 W/ AUX
SOFTWARE.....McCAIN 2033
CABINET MOUNT.....BASE
OUTPUT FILE POSITIONS...18 WITH AUX FILE
LOAD SWITCHES USED.....S2,S3,S8,S11,AUX S1
PHASES USED.....2,2 PED,6,8
OVERLAP 1.....2+6
OVERLAP 2.....NOT USED
OVERLAP 3.....NOT USED
OVERLAP 4.....NOT USED

FYA SIGNAL WIRING DETAIL

(wire signal heads as shown)

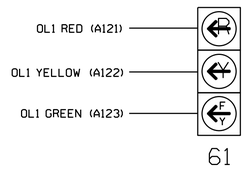

INPUT FILE POSITION LAYOUT

(front view)

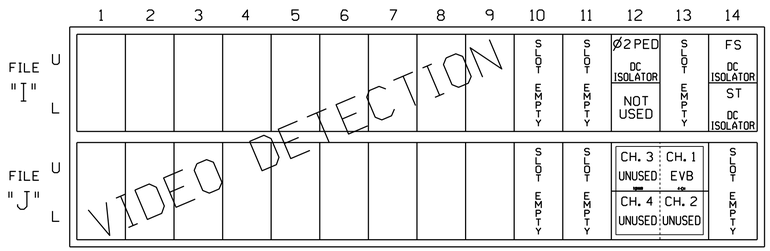

EX.: 1A, 2A, ETC. = LOOP NO.'S

FS = FLASH SENSE
ST = STOP TIME
EVB = EMERGENCY VEHICLE PREEMPT

4 CHANNEL TOMAR OSP CARD
INSERT CARD INTO SLOT J13

INPUT FILE CONNECTION & PROGRAMMING CHART

PED PUSH BUTTONS	LOOP TERMINAL	INPUT FILE POS.	DETECTOR NO.	PIN NO.	ATTRIBUTES	NEMA PHASE
P21,P22	TB8-4,6	I12U	25	67	2	2 PED

NOTE:
INSTALL DC ISOLATOR IN INPUT FILE SLOT I12

DETECTOR ATTRIBUTES LEGEND:

1-FULL TIME DELAY
2-PED CALL
3-RESERVED
4-COUNTING
5-EXTENSION
6-TYPE 3
7-CALLING
8-ALTERNATE

INPUT FILE POSITION LEGEND: J2L

FILE J
SLOT 2
LOWER

TYPICAL TOMAR FIELD WIRE DETAIL

(input file, rear view)

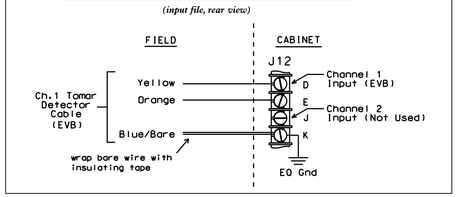

THIS ELECTRICAL DETAIL IS FOR
THE SIGNAL DESIGN: 05-1029T7
DESIGNED: September 2014
SEALED: 4/2/15
REVISED: N/A

Electrical Detail - Sheet 1 of 2 (Temporary Design 7)

ELECTRICAL AND PROGRAMMING DETAILS FOR:

NC 55 (North Alston Avenue) at Liberty St

Division 5 Durham County Durham

PLAN DATE: November 2014 REVIEWED BY: T. Joyce

PREPARED BY: B. Simmons REVIEWED BY:

REVISIONS	INIT.	DATE

Prepared in the Offices of:
Transportation Mobility and Safety Division
NORTH CAROLINA DEPARTMENT OF TRANSPORTATION
Traffic Engineering Branch
Signals Management Section
750 N.Greenfield Pkwy,Garner,NC 27529

SEAL
NORTH CAROLINA PROFESSIONAL SEAL 022013 ENGINEER GEORGE C. BROWN

DocuSigned by: George C. Brown 4/7/2015
F12601E0D8E8434... DATE

SIG. INVENTORY NO. 05-1029T7

27-MAR-2015 10:45
S:*TISAIM\TIS Signals\Workgroups\Sig Mgmt\Simmons\Working Folder\Electrical Details\Division 05\051029_smele.xxx.dgn
bsimmons

PROJECT REFERENCE NO.	SHEET NO.
U-3308	Sig. 37.2

EMERGENCY VEHICLE PREEMPTION PROGRAMMING

1. Program EVB preempt as follows:
   Main Menu - 2) PREEMPT - 4) EMERGENCY VEHICLE
   EVB Clear = 2
   EVB Clearance Phases = 8

2. Program general preemption parameters as follows:
   Main Menu - 2) PREEMPT - 6) MISC PREEMPTION PARAMETERS
   Min Time Before PE ForceOff = 1

3. Ped Clear Before Preempt is a pedestrian timing parameter, and is programmed as follows:
   Main Menu - 1) PHASE - 5) PEDESTRIAN TIMING
   PHASE 2 MIN FDW = 7

Program extend time on optical detector units for 2.0 sec for EVB

OVERLAP (1) PROGRAMMING DETAIL

Program overlaps as follows:
Main Menu - 4) OVERLAP

OVERLAP [1]:
LOADSWITCH = 9
VEH SET 1 = 2,6
YELLOW CLEARANCE = 3.8
RED CLEARANCE = 1.8

MIN WALK DURING PREEMPTION PROGRAMMING

To disable MIN WALK pedestrian timing during preemption, program the controller as follows:
Main Menu - 9) UTILITIES - 5) CONFIGURATION
EXTRA TWO = 3

COUNTDOWN PEDESTRIAN SIGNAL OPERATION

Countdown Ped Signals are required to display timing only during Ped Clearance Interval. Consult Ped Signal Module user's manual for instructions on selecting this feature.

OVERLAP GREEN FLASH PROGRAMMING (SIGNAL HEAD 61)

The following will cause the overlap green output to flash, which is wired to the FYA. Program as follows:

Main Menu - 1) PHASE - 2) PHASE FUNCTIONS PAGE TWO
OLAP G FL = 1

THIS ELECTRICAL DETAIL IS FOR
THE SIGNAL DESIGN: 05-1029T7
DESIGNED: September 2014
SEALED: 4/2/15
REVISED: N/A

Electrical Detail - Sheet 2 of 2 (Temporary Design 7)

ELECTRICAL AND PROGRAMMING DETAILS FOR:

Prepared in the Offices of:
Transportation Mobility and Safety Division
STATE OF NORTH CAROLINA
DEPARTMENT OF TRANSPORTATION
Signals Management Section
750 N.Greenfield Pkwy,Garner,NC 27529

NC 55 (North Alston Avenue)
at
Liberty St

Division 5 Durham County Durham

PLAN DATE:	November 2014	REVIEWED BY:	T. Joyce
PREPARED BY:	B. Simmons	REVIEWED BY:	

REVISIONS	INIT.	DATE

SEAL
NORTH CAROLINA PROFESSIONAL SEAL 022013 ENGINEER GEORGE C. BROWN

DocuSigned by:
George C. Brown 4/7/2015
F12601ED0BEB434 DATE

SIG. INVENTORY NO. 05-1029T7

27-MAR-2015 10:46
S:\ITS\SU\ITS Signals\Workgroups\Sig Man\Simmons\Working Folder\Electrical Details\Division 05\051029_sm_ele_xxx.dgn
bsimmons

DocuSign Envelope ID: 2B82073C-8CA6-44D2-96FA-5BE27AB92A1C

PROJECT REFERENCE NO.	SHEET NO.
U-3308	Sig. 38.0

2 Phase Fully Actuated W/ EV Preemption (Durham Signal System)

PHASING DIAGRAM

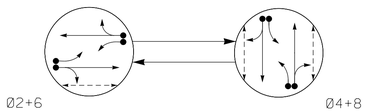

PHASING DIAGRAM DETECTION LEGEND

- DETECTED MOVEMENT
- UNDETECTED MOVEMENT (OVERLAP)
- UNSIGNALIZED MOVEMENT
- PEDESTRIAN MOVEMENT

EV Preempt Phases

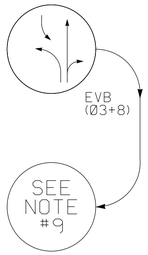

TABLE OF OPERATION

SIGNAL FACE	PHASE Ø2+6	PHASE Ø4+8	PHASE EVB	PHASE FLASH
21	~~R~~ Y	~~R~~ R	~~R~~ R	~~Y~~ Y
22,23	G	R	R	Y
31	~~R~~ R	~~R~~ Y	←	~~R~~ R
41	~~R~~ R	~~R~~ Y	~~R~~ Y	~~R~~ R
42,43	R	G	R	R
61	~~R~~ Y	~~R~~ R	~~R~~ R	~~Y~~ Y
62,63	G	R	R	Y
81,82	R	G	G	R
P21,P22	W	DW	DW	DRK
P41,P42	DW	W	DW	DRK
P81,P82	DW	W	DW	DRK

2033 EV PREEMPTION

FUNCTION	EVB (SECONDS)
DELAY BEFORE PREEMPT	0
MIN. PED. CLEAR BEFORE PREEMPT	*
MIN. GREEN BEFORE PREEMPT	1
CLEARANCE TIME	2
PREEMPT EXTEND**	2.0

* See Timing Chart for Min Ped Clearance
** Program Timing on Optical Detector Unit

SIGNAL FACE I.D.

All Heads L.E.D.
* See Note 11
** See Note 12

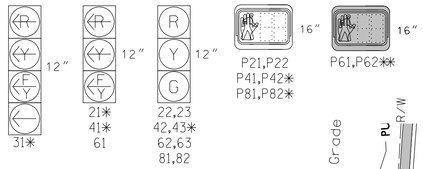

2033 SOFTWARE w/ 2070 CONTROLLER LOOP & DETECTOR UNIT INSTALLATION CHART

INDUCTIVE LOOPS: LOOP NO.	SIZE (ft)	TURNS	DIST. FROM STOPBAR (ft)	NEW	EXISTING	DETECTOR PROGRAMMING: NEMA PHASE	TIMING: DELAY	TIMING: CARRY (STRETCH)	ATTRIBUTES: 1 FULL TIME	2 DELAY	3 PEDESTRIAN CALL	4 RESERVED	5 COUNT	6 EXTENSION	7 TYPE 3	8 CALLING	ALTERNATE *	SYSTEM LOOPS	STATUS: NEW	STATUS: EXISTING
2A	6x6	*	70	-	*	2	- SEC.	- SEC.	-	-	-	-	X	-	X	-	-	-	-	*
2B	6x40	*	0	-	*	2	- SEC.	- SEC.	-	-	-	-	X	-	X	-	-	-	-	*
4A	6x40	*	0	*	-	4	3 SEC.	- SEC.	-	-	-	-	X	-	X	-	-	-	-	*
4B	6x40	*	0	*	-	4	10 SEC.	- SEC.	-	-	-	-	X	-	X	-	-	-	-	*
6A	6x6	*	70	-	*	6	- SEC.	- SEC.	-	-	-	-	X	-	X	-	-	-	-	*
6B	6x40	*	70	-	*	6	- SEC.	- SEC.	-	-	-	-	X	-	X	-	-	-	-	*
8A	6x40	*	0	-	*	8	3 SEC.	- SEC.	-	-	-	-	X	-	X	-	-	-	-	*
8B	6x40	*	0	-	*	8	10 SEC.	- SEC.	-	-	-	-	X	-	X	-	-	-	-	*
PEDESTRIAN DETECTION																				
P21,P22	N/A	N/A	N/A	-	X	2	- SEC.	- SEC.	-	X	-	-	-	-	-	-	-	-	-	X
P41,P42	N/A	N/A	N/A	-	X	4	- SEC.	- SEC.	-	X	-	-	-	-	-	-	-	-	-	X
P81,P82	N/A	N/A	N/A	-	X	8	- SEC.	- SEC.	-	X	-	-	-	-	-	-	-	-	-	X

* Video Detection Zone

NOTES

1. Refer to "Road Standard Drawings NCDOT" dated January 2012, "Standard Specifications for Roads and Structures" dated January 2012.
2. Do not program signal for late night flashing operation unless otherwise directed by the Engineer.
3. Set all detector units to presence mode.
4. Program all timing information into phase banks 1,2, and 3 unless otherwise noted.
5. Set phase bank 3 maximum limit to 250 seconds for phases used.
6. Omit "WALK" and flashing "DON'T WALK" with no pedestrian calls.
7. Program pedestrian heads to countdown the flashing "Don't Walk" time.
8. This intersection features an optical preemption system. Shown locations of optical detectors are conceptual only.
9. Upon completion of Emergency Vehicle Preemption, controller returns to normal operation.
10. Maximum times shown in timing chart are for free-run operation only. Coordinated signal system timing values supersede these values.
11. Reconnect and unbag signal heads #21, #31, #41, #42, #43, and pedestrian signal heads #P41, #P42, #P81, and #P82 during this phase of construction.
12. Pedestrian signal heads #P61 and #P62 to remain disconnected and bagged during this phase of construction.
13. Contractor shall adjust video detection zones as required.

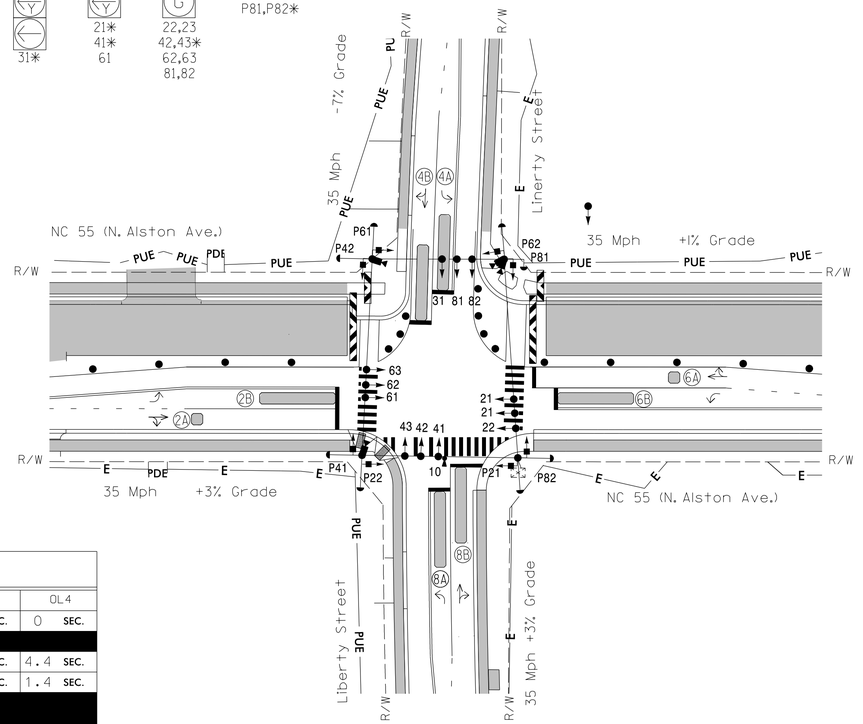

TIMING CHART
2033 SOFTWARE w/2070 CONTROLLER

PHASE	Ø2	Ø3	Ø4	Ø6	Ø8	OL1	OL3	OL4
MINIMUM INITIAL *	10 SEC.	- SEC.	7 SEC.	10 SEC.	7 SEC.	0 SEC.	0 SEC.	0 SEC.
VEHICLE EXTENSION *	3.0 SEC.	- SEC.	2.0 SEC.	3.0 SEC.	2.0 SEC.			
YELLOW CHANGE INT.	3.8 SEC.	4.4 SEC.	4.4 SEC.	3.8 SEC.	4.4 SEC.	3.8 SEC.	3.8 SEC.	4.4 SEC.
RED CLEARANCE	1.8 SEC.	2.1 SEC.	1.4 SEC.	1.8 SEC.	1.4 SEC.	1.8 SEC.	1.8 SEC.	1.4 SEC.
MAXIMUM LIMIT *	50 SEC.	35 SEC.	35 SEC.	50 SEC.	35 SEC.			
RECALL POSITION	VEH. RECALL	NONE	NONE	VEH. RECALL	NONE			
VEHICLE CALL MEMORY	YELLOW LOCK	NONE	NONE	YELLOW LOCK	NONE			
DOUBLE ENTRY	OFF	OFF	ON	OFF	ON			
WALK *	4 SEC.	- SEC.	4 SEC.	- SEC.	4 SEC.			
FLASHING DON'T WALK	14 SEC.	- SEC.	13 SEC.	- SEC.	18 SEC.			
MIN PED CLEARANCE	7 SEC.	- SEC.	7 SEC.	- SEC.	9 SEC.			
TYPE 3 LIMIT	- SEC.	- SEC.	- SEC.	- SEC.	- SEC.			
ALTERNATE EXTENSION	- SEC.	- SEC.	- SEC.	- SEC.	- SEC.			
ADD PER VEHICLE *	- SEC.	- SEC.	- SEC.	- SEC.	- SEC.			
MAXIMUM INITIAL *	- SEC.	- SEC.	- SEC.	- SEC.	- SEC.			
MAXIMUM GAP*	3.0 SEC.	- SEC.	2.0 SEC.	3.0 SEC.	2.0 SEC.			
REDUCE 0.1 SEC EVERY *	- SEC.	- SEC.	- SEC.	- SEC.	- SEC.			
MINIMUM GAP	3.0 SEC.	- SEC.	2.0 SEC.	3.0 SEC.	2.0 SEC.			

* These values may be field adjusted. Do not adjust Min Green and Extension times for phases 2 and 6 lower than what is shown. Min Green for all other phases should not be lower than 4 seconds.

LEGEND

PROPOSED		EXISTING
○→	Traffic Signal Head	●→
◐→	Modified Signal Head	N/A
⊣	Sign	⊣
□↓	Pedestrian Signal Head With Push Button & Sign	■↓
○→	Signal Pole with Guy	●→
○→	Signal Pole with Sidewalk Guy	●→
▭	Inductive Loop Detector	▭
⊠	Controller & Cabinet	⊡
□	Junction Box	■
-·-·-	2-in Underground Conduit	-·-·-
N/A	Right of Way	
→	Directional Arrow	→
▭	Work Area	N/A
●	Drums	N/A
E	Construction Easement	N/A
PUE	Permanent Utility Easment	N/A
PDE	Permanent Drainage Easment	N/A
▨	Barricades	N/A
———	Direct Bury	----------
◁	Optical Detector	◆
▭◁	Video Detector	▬◀
▭	Video Detection Area	▭

Signal Upgrade - Temporary Design 8 (TMP Phase 2, Steps 1-6)

SEPI ENGINEERING & CONSTRUCTION
1025 Wade Avenue
Raleigh, NC 27605
Tel:919-789-9977
Fax:919-789-9591
License #: C-2197

Prepared for the Offices of:
Transportation Mobility and Safety Division
Traffic Signal Design Section
750 N.Greenfield Pkwy.Garner,NC 27529

NC 55 (North Alston Avenue) at Liberty St
Division 5 Durham County Durham
PLAN DATE: September 2014 REVIEWED BY: J Hochanadel
PREPARED BY: R Drayton REVIEWED BY:

REVISIONS	INIT.	DATE

SCALE 0 40 1"=40'

SEAL
NORTH CAROLINA PROFESSIONAL SEAL 28430 ENGINEER JEFFREY P. HOCHANADEL

DocuSigned by: 4/02/15
507B1D2BF98C498...
DATE

SIG. INVENTORY NO. 05-102918

3/20/2015
G:\NCDOT\Transportation\TIP\R13.017.00 NCDOT 2012 Traffic LSA\TIP\R13.017.03 (U-3308 Signals)\Traffic\Signals\Design\Signals\TEMP SIGNALS WITH VIDEO\05-102905-102918.dgn
clawson

PROJECT REFERENCE NO.	SHEET NO.
U-3308	Sig. 38.1

EDI MODEL 2018ECL-NC CONFLICT MONITOR PROGRAMMING DETAIL

(remove jumpers and set switches as shown)

REMOVE DIODE JUMPERS 2-6, 2-9, 2-11, 2-13, 3-8, 3-10, 3-12, 4-8, 4-10, 4-12, 4-14, 4-16, 6-9, 6-11, 6-13, 8-10, 8-12, 8-14, 8-16, 9-11, 9-13, 10-12, 10-14, 10-16, 11-13, 12-14, 12-16 and 14-16.

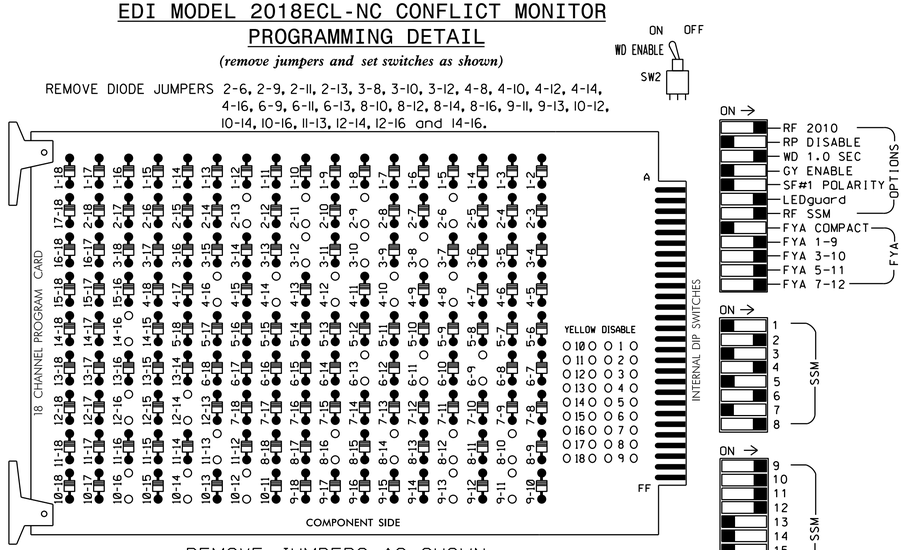

REMOVE JUMPERS AS SHOWN

NOTES:

1. Card is provided with all diode jumpers in place. Removal of any jumper allows its channels to run concurrently.
2. Ensure jumpers SEL2-SEL5 and SEL9 are present on the monitor board.
3. Ensure that Red Enable is active at all times during normal operation.
4. Ensure conflict monitor communicates with 2070.

■ = DENOTES POSITION OF SWITCH

NOTES

1. To prevent "flash-conflict" problems, insert red flash program blocks for all unused vehicle load switches in the output file. Verify that signal heads flash in accordance with the signal plans.
2. Program controller to Start Up in phases 2 and 6 green.
3. Set power-up flash time to 0 seconds within the controller programming. The conflict monitor will govern startup flash. Ensure STARTUP "RED START" is set to 0 seconds.
4. Enable Simultaneous Gap-Out feature for all phases.
5. Program all timing information into phase banks 1, 2, and 3 unless otherwise noted.
6. Set phase bank 3 maximum limit to 250 seconds for phases used.
7. Program phases 4 and 8 for Double Entry.
8. Ensure start up flash phases are coordinated with flash program block assignments.
9. Program Startup Ped Calls for phases 2, 4 and 8.
10. Set the Red Revert interval on the controller to 1 second.
11. This cabinet and controller are part of the Durham Signal System.

EQUIPMENT INFORMATION

CONTROLLER.....2070E
CABINET.....332 W/ AUX
SOFTWARE.....McCAIN 2033
CABINET MOUNT.....BASE
OUTPUT FILE POSITIONS...18 WITH AUX FILE
LOAD SWITCHES USED.....S2,S3,S4,S5,S6,S8,S11,S12
AUX S1,AUX S2,AUX S4,AUX S5
PHASES USED.....2,2 PED,3*,4,4 PED,6,8,8 PED
OVERLAP 1.....2+6
OVERLAP 2.....**
OVERLAP 3.....2+6
OVERLAP 4.....4+8

* Phase used only during Preempt.
** See FYA PPLT Programming - Sheet 2.

SIGNAL HEAD HOOK-UP CHART

LOAD SWITCH NO.	S1	S2	S3	S4	S5	S6	S7	S8	S9	S10	S11	S12	AUX S1	AUX S2	AUX S3	AUX S4	AUX S5	AUX S6
CMU CHANNEL NO.	1	2	13	3	4	14	5	6	15	7	8	16	9	10	17	11	12	18
PHASE	1	2	2 PED	3	4	4 PED	5	6	6 PED	7	8	8 PED	OL1	OL2	SPARE	OL3	OL4	SPARE
SIGNAL HEAD NO.	NU	22,23	P21, P22	31 ★		42,43	NU	62,63	NU	NU	81,82	P81, P82	61 ★	31 ★	NU	21 ★	41 ★	NU
RED		128				101			134			107						
YELLOW		129		*		102			135			108						
GREEN		130				103			136			109						
RED ARROW													A121	A124		A114	A101	
YELLOW ARROW													A122	A125		A115	A102	
FLASHING YELLOW ARROW													A123	A126		A116	A103	
GREEN ARROW				118														
✋			113			104						110						
🚶			115			106						112						

NU = Not Used

* Denotes install load resistor. See load resistor installation detail this sheet.

★ See pictorial of head wiring in detail below.

FYA SIGNAL WIRING DETAIL

(wire signal heads as shown)

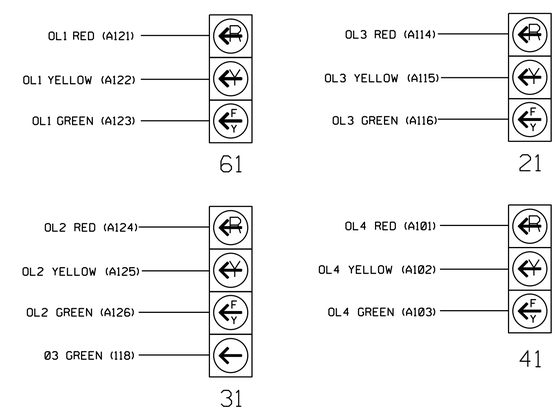

INPUT FILE POSITION LAYOUT

(front view)

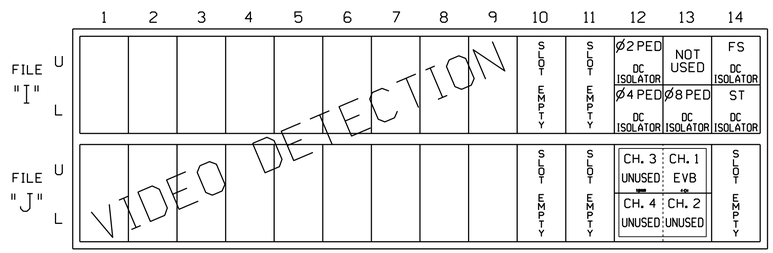

EX.: 1A, 2A, ETC. = LOOP NO.'S

FS = FLASH SENSE
ST = STOP TIME
EVB = EMERGENCY VEHICLE PREEMPT

4 CHANNEL TOMAR OSP CARD
INSERT CARD INTO SLOT J13

INPUT FILE CONNECTION & PROGRAMMING CHART

PED PUSH BUTTONS	LOOP TERMINAL	INPUT FILE POS.	DETECTOR NO.	PIN NO.	ATTRIBUTES	NEMA PHASE
P21,P22	TB8-4,6	I12U	25	67	2	2 PED
P41,P42	TB8-5,6	I12L	27	69	2	4 PED
P81,P82	TB8-8,9	I13L	28	70	2	8 PED

NOTE:
INSTALL DC ISOLATORS IN INPUT FILE SLOTS I12 AND I13

DETECTOR ATTRIBUTES LEGEND:

1-FULL TIME DELAY
2-PED CALL
3-RESERVED
4-COUNTING
5-EXTENSION
6-TYPE 3
7-CALLING
8-ALTERNATE

INPUT FILE POSITION LEGEND: J2L
FILE J
SLOT 2
LOWER

LOAD RESISTOR INSTALLATION DETAIL

ACCEPTABLE VALUES	
VALUE (ohms)	WATTAGE
1.5K - 1.9K	25W (min)
2.0K - 3.0K	10W (min)

PHASE 3 YELLOW FIELD TERMINAL (117)

AC-

TYPICAL TOMAR FIELD WIRE DETAIL

(input file, rear view)

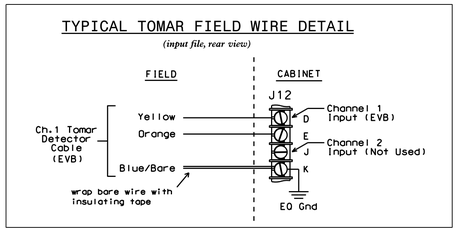

THIS ELECTRICAL DETAIL IS FOR THE SIGNAL DESIGN: 05-1029T8
DESIGNED: September 2014
SEALED: 4/2/15
REVISED: N/A

Electrical Detail - Sheet 1 of 2 (Temporary Design 8)

ELECTRICAL AND PROGRAMMING DETAILS FOR:

NC 55 (North Alston Avenue) at Liberty St

Division 5 Durham County Durham

PLAN DATE: November 2014 REVIEWED BY: T. Joyce

PREPARED BY: B. Simmons REVIEWED BY:

REVISIONS	INIT.	DATE

Prepared in the Offices of:
Transportation Mobility and Safety Division
NORTH CAROLINA DEPARTMENT OF TRANSPORTATION
Signal Management Section
750 N.Greenfield Pkwy.Garner,NC 27529

SEAL
NORTH CAROLINA PROFESSIONAL SEAL 022013 ENGINEER GEORGE C. BROWN

DocuSigned by: George C. Brown 4/7/2015
F12601E10BEB434... DATE

SIG. INVENTORY NO. 05-1029T8

27 MAR 2015 10:47
S:\#TISIG\#TIS Signals\#Workgroups\#Sig Mgmt\#Simmons\#Working Folder\#Electrical Details\#Division 05\#051029_sm_ele_xxx.dgn
bsimmons

PROJECT REFERENCE NO.	SHEET NO.
U-3308	Sig. 38.2

EMERGENCY VEHICLE PREEMPTION PROGRAMMING

1. Program EVB preempt as follows:
   Main Menu - 2) PREEMPT - 4) EMERGENCY VEHICLE
   EVB Clear = 2
   EVB Clearance Phases = 3,8

2. Program general preemption parameters as follows:
   Main Menu - 2) PREEMPT - 6) MISC PREEMPTION PARAMETERS
   Min Time Before PE ForceOff = 1

3. Ped Clear Before Preempt is a pedestrian timing parameter, and is programmed as follows:
   Main Menu - 1) PHASE - 5) PEDESTRIAN TIMING
   PHASE 2 MIN FDW = 7
   PHASE 4 MIN FDW = 7
   PHASE 8 MIN FDW = 9

Program extend time on optical detector units for 2.0 sec for EVB

FYA PPLT PROGRAMMING (SIGNAL HEAD 31)

1. Program Flashing Yellow Arrow phases as follows:
   Main Menu - 1) PHASE - 2) PHASE FUNCTIONS PAGE TWO
   PPLT FYA = PHASE 3

2. Assign output pin for Flashing Yellow Arrow as follows:
   Main Menu - 6) OUTPUTS - F) FYA PPLT
   Phase 3 = 96

3. Redirect RED and YELLOW outputs for the left turn phases as follows:
   Main Menu - 6) OUTPUTS - 8) REDIRECT PHASE
   Phase 3 RED = 94, Phase 3 YELLOW = 95

SPECIAL NOTE EV PREEMPT PROGRAMMING

Setting 'FYA DURING PREEMPT' to 'Y' eliminates yellow trap when transitioning to preempt from adjacent through phase.
Main Menu - 9) UTILITIES - 9) MISC
FYA DURING PREEMPT (Y/N) = Y

COUNTDOWN PEDESTRIAN SIGNAL OPERATION

Countdown Ped Signals are required to display timing only during Ped Clearance Interval. Consult Ped Signal Module user's manual for instructions on selecting this feature.

MIN WALK DURING PREEMPTION PROGRAMMING

To disable MIN WALK pedestrian timing during preemption, program the controller as follows:
Main Menu - 9) UTILITIES - 5) CONFIGURATION
EXTRA TWO = 3

FLASHER CIRCUIT MODIFICATION DETAIL

In order to insure that signals flash concurrently on the same approach, make the following flasher circuit changes:

1. On rear of PDA - Remove wire from Term. T2-4 and Terminate on T2-2.
2. On rear of PDA - Remove wire from Term. T2-5 and Terminate on T2-3.
3. Remove Flasher Unit 2.

The changes listed above ties all Phases and Overlaps to Flasher Unit 1.

OVERLAPS (1), (3) & (4) PROGRAMMING DETAIL

Program overlaps as follows:
Main Menu - 4) OVERLAP

OVERLAP [1]:
LOADSWITCH = 9
VEH SET 1 = 2,6
YELLOW CLEARANCE = 3.8
RED CLEARANCE = 1.8

Press "+" Twice

OVERLAP [3]:
LOADSWITCH = 11
VEH SET 1 = 2,6
YELLOW CLEARANCE = 3.8
RED CLEARANCE = 1.8

Press "+"

OVERLAP [4]:
LOADSWITCH = 12
VEH SET 1 = 4,8
YELLOW CLEARANCE = 4.4
RED CLEARANCE = 1.4

END OF OVERLAP PROGRAMMING

STARTUP CALLS PROGRAMMING

Prevents Veh Call to phase 3 during Startup. Phase 3 used only during Preempt.
Main Menu - 9) UTILITIES - 1) STARTUP
VEHICLE CALLS 2,4,6,8

OVERLAP GREEN FLASH PROGRAMMING (SIGNAL HEAD 21, 41 & 61)

The following will cause the overlap green output to flash, which is wired to the FYA. Program as follows:

Main Menu - 1) PHASE - 2) PHASE FUNCTIONS PAGE TWO
OLAP G FL = 1, 3, 4

THIS ELECTRICAL DETAIL IS FOR
THE SIGNAL DESIGN: 05-1029T8
DESIGNED: September 2014
SEALED: 4/2/15
REVISED: N/A

Electrical Detail - Sheet 2 of 2 (Temporary Design 8)

ELECTRICAL AND PROGRAMMING DETAILS FOR:

NC 55 (North Alston Avenue) at Liberty St

Prepared in the Offices of:
Transportation Mobility and Safety Division
NORTH CAROLINA DEPARTMENT OF TRANSPORTATION
Signal Management Section
750 N.Greenfield Pkwy,Garner,NC 27529

Division 5 | Durham County | Durham

PLAN DATE: November 2014	REVIEWED BY: T. Joyce
PREPARED BY: B. Simmons	REVIEWED BY:

REVISIONS	INIT.	DATE

SEAL
NORTH CAROLINA PROFESSIONAL SEAL 022013 ENGINEER GEORGE C. BROWN

DocuSigned by: George C. Brown 4/7/2015
F12601E0BEB434... DATE

SIG. INVENTORY NO. 05-1029T8

27-MAR-2015 10:47
S:*ITSSIG#1\ITS Signals\Workgroups\Sig Mgmt\Simmons\Working Folder*Electrical Details*Division 05*051029_sm_ele_xxx.dgn
bsimmons

DocuSign Envelope ID: 2B82073C-8CA6-44D2-96FA-5BE27AB92A1C

PROJECT REFERENCE NO.	SHEET NO.
U-3308	Sig. 39.0

2 Phase
Fully Actuated
W/ EV Preemption
(Durham Signal System)

PHASING DIAGRAM

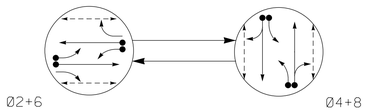

EV Preempt Phases

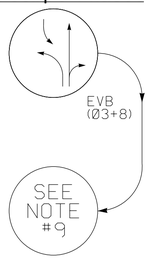

PHASING DIAGRAM DETECTION LEGEND

- DETECTED MOVEMENT
- UNDETECTED MOVEMENT (OVERLAP)
- UNSIGNALIZED MOVEMENT
- PEDESTRIAN MOVEMENT

TABLE OF OPERATION

SIGNAL FACE	PHASE Ø2+6	Ø4+8	EVB	FLASH
21	~~F Y~~	~~R~~	~~R~~	~~Y~~
22,23	G	R	R	Y
31	~~R~~	~~F Y~~	~~—~~	~~R~~
41	~~R~~	~~F Y~~	~~F Y~~	~~R~~
42,43	R	G	R	R
61	~~F Y~~	~~R~~	~~R~~	~~Y~~
62,63	G	R	R	Y
81,82	R	G	G	R
P21,P22	W	DW	DW	DRK
P41,P42	DW	W	DW	DRK
P61,P62	W	DW	DW	DRK
P81,P82	DW	W	DW	DRK

2033 SOFTWARE w/ 2070 CONTROLLER
LOOP & DETECTOR UNIT INSTALLATION CHART

INDUCTIVE LOOPS						DETECTOR PROGRAMMING																	
							TIMING		ATTRIBUTES												STATUS	
									1	2	3	4	5	6	7	8						
LOOP NO.	SIZE (ft)	TURNS	DIST. FROM STOPBAR (ft)	NEW	EXISTING	NEMA PHASE	DELAY	CARRY (STRETCH)	FULL TIME DELAY	PEDESTRIAN CALL	RESERVED	COUNT	EXTENSION	TYPE 3	CALLING	ALTERNATE	SYSTEM LOOPS	NEW	EXISTING
2A	6x6	4	70	X	-	2	- SEC.	- SEC.	-	-	-	-	X	-	X	-	-	X	-
2B	6x40	2-4-2	0	X	-	2	- SEC.	- SEC.	-	-	-	-	X	-	X	-	-	X	-
4A	6x40	2-4-2	0	X	-	4	3 SEC.	- SEC.	-	-	-	-	X	-	X	-	-	X	-
4B	6x40	2-4-2	0	X	-	4	10 SEC.	- SEC.	-	-	-	-	X	-	X	-	-	X	-
6A	6x6	4	70	X	-	6	- SEC.	- SEC.	-	-	-	-	X	-	X	-	-	X	-
6B	6x40	2-4-2	0	X	-	6	- SEC.	- SEC.	-	-	-	-	X	-	X	-	-	X	-
8A	6x40	2-4-2	0	X	-	8	3 SEC.	- SEC.	-	-	-	-	X	-	X	-	-	X	-
8B	6x40	2-4-2	0	X	-	8	10 SEC.	- SEC.	-	-	-	-	X	-	X	-	-	X	-
PEDESTRIAN DETECTION																						
P21,P22	N/A	N/A	N/A	-	X	2	- SEC.	- SEC.	-	X	-	-	-	-	-	-	-	-	X
P41,P42	N/A	N/A	N/A	-	X	4	- SEC.	- SEC.	-	X	-	-	-	-	-	-	-	-	X
P61,P62	N/A	N/A	N/A	-	X	6	- SEC.	- SEC.	-	X	-	-	-	-	-	-	-	-	X
P81,P82	N/A	N/A	N/A	-	X	8	- SEC.	- SEC.	-	X	-	-	-	-	-	-	-	-	X

2033 EV PREEMPTION

FUNCTION	EVB (SECONDS)
DELAY BEFORE PREEMPT	0
MIN. PED. CLEAR BEFORE PREEMPT	✳
MIN. GREEN BEFORE PREEMPT	1
CLEARANCE TIME	2
PREEMPT EXTEND**	2.0

✳ See Timing Chart for Min Ped Clearance
** Program Timing on Optical Detector Unit

SIGNAL FACE I.D.

All Heads L.E.D.

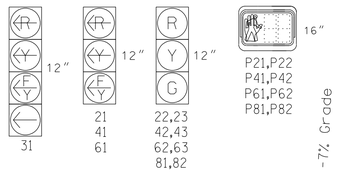

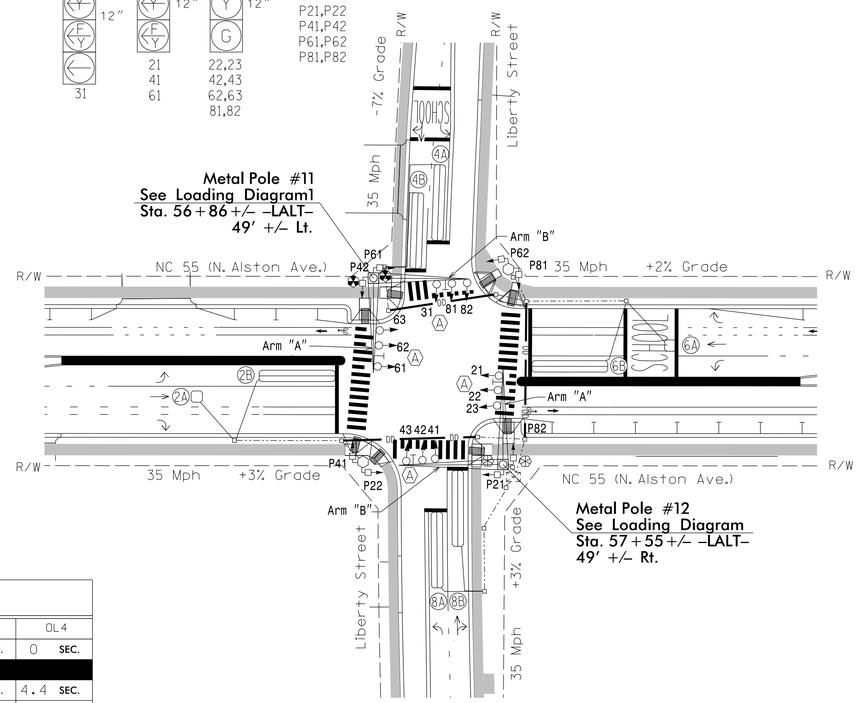

LEGEND

PROPOSED		EXISTING
○→	Traffic Signal Head	●→
◐→	Modified Signal Head	N/A
⊣	Sign	⊣
▯↓	Pedestrian Signal Head With Push Button & Sign	■↓
○ ○~	Signal Pole with Guy	● ●~
○ ○~	Signal Pole with Sidewalk Guy	● ●~
▭	Inductive Loop Detector	▭
⊠	Controller & Cabinet	⊠
□	Junction Box	■
·-·-·-·	2-in Underground Conduit	·-·-·-·
N/A	Right of Way	———
→	Directional Arrow	→
Ⓐ	Street Name Sign	Ⓐ
⊛	Type I Pushbutton Post	⊛
⬡	Type II Signal Pedestal	⬢
◎▷	Metal Pole with Mastarm	◎▷
○◁	Optical Detector	●◁

TIMING CHART
2033 SOFTWARE w/2070 CONTROLLER

PHASE	Ø2	Ø3	Ø4	Ø6	Ø8	OL1	OL3	OL4
MINIMUM INITIAL *	10 SEC.	- SEC.	7 SEC.	10 SEC.	7 SEC.	0 SEC.	0 SEC.	0 SEC.
VEHICLE EXTENSION *	3.0 SEC.	- SEC.	2.0 SEC.	3.0 SEC.	2.0 SEC.			
YELLOW CHANGE INT.	3.7 SEC.	4.4 SEC.	4.4 SEC.	3.7 SEC.	4.4 SEC.	3.7 SEC.	3.7 SEC.	4.4 SEC.
RED CLEARANCE	2.4 SEC.	3.1 SEC.	2.4 SEC.	2.4 SEC.	2.4 SEC.	2.4 SEC.	2.4 SEC.	2.4 SEC.
MAXIMUM LIMIT *	50 SEC.	15 SEC.	35 SEC.	50 SEC.	35 SEC.			
RECALL POSITION	VEH. RECALL	NONE	NONE	VEH. RECALL	NONE			
VEHICLE CALL MEMORY	YELLOW LOCK	NONE	NONE	YELLOW LOCK	NONE			
DOUBLE ENTRY	OFF	OFF	ON	OFF	ON			
WALK *	4 SEC.	- SEC.	4 SEC.	4 SEC.	4 SEC.			
FLASHING DON'T WALK	10 SEC.	- SEC.	13 SEC.	8 SEC.	14 SEC.			
MIN PED CLEARANCE	5 SEC.	- SEC.	7 SEC.	4 SEC.	7 SEC.			
TYPE 3 LIMIT	- SEC.	- SEC.	- SEC.	- SEC.	- SEC.			
ALTERNATE EXTENSION	- SEC.	- SEC.	- SEC.	- SEC.	- SEC.			
ADD PER VEHICLE *	- SEC.	- SEC.	- SEC.	- SEC.	- SEC.			
MAXIMUM INITIAL *	- SEC.	- SEC.	- SEC.	- SEC.	- SEC.			
MAXIMUM GAP*	3.0 SEC.	- SEC.	2.0 SEC.	3.0 SEC.	2.0 SEC.			
REDUCE 0.1 SEC EVERY *	- SEC.	- SEC.	- SEC.	- SEC.	- SEC.			
MINIMUM GAP	3.0 SEC.	- SEC.	2.0 SEC.	3.0 SEC.	2.0 SEC.			

* These values may be field adjusted. Do not adjust Min Green and Extension times for phases 2 and 6 lower than what is shown. Min Green for all other phases should not be lower than 4 seconds.

NOTES

1. Refer to "Road Standard Drawings NCDOT" dated January 2012, "Standard Specifications for Roads and Structures" dated January 2012.
2. Do not program signal for late night flashing operation unless otherwise directed by the Engineer.
3. Set all detector units to presence mode.
4. Program all timing information into phase banks 1,2, and 3 unless otherwise noted.
5. Set phase bank 3 maximum limit to 250 seconds for phases used.
6. Omit "WALK" and flashing "DON'T WALK" with no pedestrian calls.
7. Program pedestrian heads to countdown the flashing "Don't Walk" time.
8. This intersection features an optical preemption system. Shown locations of optical detectors are conceptual only.
9. Upon completion of Emergency Vehicle Preemption, controller returns to normal operation.
10. Maximum times shown in timing chart are for free-run operation only. Coordinated signal system timing values supersede these values.
11. Pedestrian pedestals are conceptual and shown for reference only. See sheets P1-P3 for pushbutton location details.

Signal Upgrade - Final Design

SEPI ENGINEERING & CONSTRUCTION
1025 Wade Avenue
Raleigh, NC 27605
Tel:919-789-9977
Fax:919-789-9591
License #: C-2197

Prepared for the Offices of:
Transportation Mobility and Safety Division
NORTH CAROLINA DEPARTMENT OF TRANSPORTATION
Signal Design Section
750 N.Greenfield Pkwy.Garner,NC 27529

NC 55 (North Alston Avenue)
at
Liberty St

Division 5 Durham County Durham

PLAN DATE: September 2014 REVIEWED BY: J Hochanadel
PREPARED BY: R Drayton REVIEWED BY:

SCALE 0 40 1"=40'

REVISIONS	INIT.	DATE

SEAL
NORTH CAROLINA PROFESSIONAL SEAL 28430 ENGINEER JEFFREY P. HOCHANADEL

DocuSigned by: 4/02/15
5078102BF98C498...
DATE

SIG. INVENTORY NO. 05-1029

3/26/2015
C:\WorkDot\Transportation\TIP\R13.017.00 NCDOT 2012 Traffic LSA\TIP\R13.017.03 (U-3308 Signals)\Traffic\Signals\Design\Signals\FINAL SIGNALS WITH MAST ARMS\405-1029.dgn
clowson

PROJECT REFERENCE NO.	SHEET NO.
U-3308	Sig. 39.1

EDI MODEL 2018ECL-NC CONFLICT MONITOR PROGRAMMING DETAIL

(remove jumpers and set switches as shown)

REMOVE DIODE JUMPERS 2-6, 2-9, 2-11, 2-13, 2-15, 3-8, 3-10, 3-12, 4-8, 4-10, 4-12, 4-14, 4-16, 6-9, 6-11, 6-13, 6-15, 8-10, 8-12, 8-14, 8-16, 9-11, 9-13, 9-15, 10-12, 10-14, 10-16, 11-13, 11-15, 12-14, 12-16, 13-15 and 14-16.

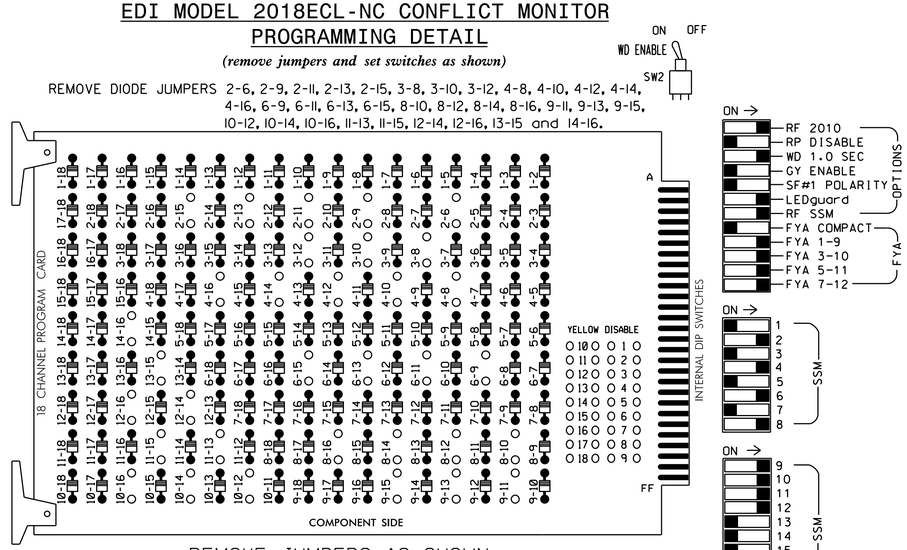

REMOVE JUMPERS AS SHOWN

■ = DENOTES POSITION OF SWITCH

NOTES:

1. Card is provided with all diode jumpers in place. Removal of any jumper allows its channels to run concurrently.
2. Ensure jumpers SEL2-SEL5 and SEL9 are present on the monitor board.
3. Ensure that Red Enable is active at all times during normal operation.
4. Ensure conflict monitor communicates with 2070.

NOTES

1. To prevent "flash-conflict" problems, insert red flash program blocks for all unused vehicle load switches in the output file. Verify that signal heads flash in accordance with the signal plans.
2. Program controller to Start Up in phases 2 and 6 green.
3. Set power-up flash time to 0 seconds within the controller programming. The conflict monitor will govern startup flash. Ensure STARTUP "RED START" is set to 0 seconds.
4. Enable Simultaneous Gap-Out feature for all phases.
5. Program all timing information into phase banks 1, 2, and 3 unless otherwise noted.
6. Set phase bank 3 maximum limit to 250 seconds for phases used.
7. Program phases 4 and 8 for Double Entry.
8. Ensure start up flash phases are coordinated with flash program block assignments.
9. Program Startup Ped Calls for phases 2, 4, 6 and 8.
10. Set the Red Revert interval on the controller to 1 second.
11. This cabinet and controller are part of the Durham Signal System.

SIGNAL HEAD HOOK-UP CHART

LOAD SWITCH NO.	S1	S2	S3	S4	S5	S6	S7	S8	S9	S10	S11	S12	AUX S1	AUX S2	AUX S3	AUX S4	AUX S5	AUX S6
CMU CHANNEL NO.	1	2	13	3	4	14	5	6	15	7	8	16	9	10	17	11	12	18
PHASE	1	2	2 PED	3	4	4 PED	5	6	6 PED	7	8	8 PED	OL1	OL2	SPARE	OL3	OL4	SPARE
SIGNAL HEAD NO.	NU	22,23	P21, P22	31 ★	42,43	P41, P42	NU	62,63	P61, P62	NU	81,82	P81, P82	61 ★	31 ★	NU	21 ★	41 ★	NU
RED		128			101			134			107							
YELLOW		129		✳	102			135			108							
GREEN		130			103			136			109							
RED ARROW													A121	A124		A114	A101	
YELLOW ARROW													A122	A125		A115	A102	
FLASHING YELLOW ARROW													A123	A126		A116	A103	
GREEN ARROW				118														
✋			113			104			119			110						
🚶			115			106			121			112						

NU = Not Used

✳ Denotes install load resistor. See load resistor installation detail sheet 2.

★ See pictorial of head wiring in detail below.

EQUIPMENT INFORMATION

CONTROLLER.....2070E
CABINET.....332 W/ AUX
SOFTWARE.....McCAIN 2033
CABINET MOUNT.....BASE
OUTPUT FILE POSITIONS...18 WITH AUX FILE
LOAD SWITCHES USED.....S2,S3,S4,S5,S6,S8,S9,S11,S12
AUX S1,AUX S2,AUX S4,AUX S5
PHASES USED.....2,2 PED,3✳,4,4 PED,6,6 PED,8,8 PED
OVERLAP 1.....2+6
OVERLAP 2.....✳✳
OVERLAP 3.....2+6
OVERLAP 4.....4+8

✳ Phase used only during Preempt.
✳✳ See FYA PPLT Programming - Sheet 2.

FYA SIGNAL WIRING DETAIL

(wire signal heads as shown)

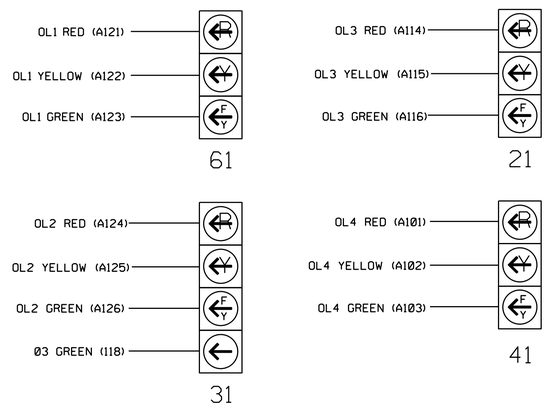

INPUT FILE POSITION LAYOUT

(front view)

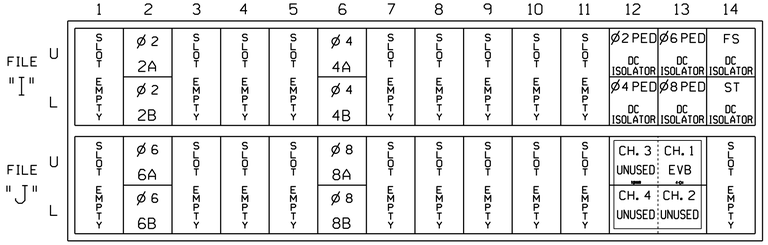

EX.: 1A, 2A, ETC. = LOOP NO.'S

FS = FLASH SENSE
ST = STOP TIME
EVB = EMERGENCY VEHICLE PREEMPT

4 CHANNEL TOMAR OSP CARD
INSERT CARD INTO SLOT J13

INPUT FILE CONNECTION & PROGRAMMING CHART

LOOP NO.	LOOP TERMINAL	INPUT FILE POS.	DETECTOR NO.	PIN NO.	ATTRIBUTES	NEMA PHASE
2A	TB2-5,6	I2U	1	39	5 7	2
2B	TB2-7,8	I2L	5	43	5 7	2
4A	TB4-9,10	I6U	3	41	5 7	4
4B	TB4-11,12	I6L	7	45	5 7	4
6A	TB3-5,6	J2U	2	40	5 7	6
6B	TB3-7,8	J2L	6	44	5 7	6
8A	TB5-9,10	J6U	4	42	5 7	8
8B	TB5-11,12	J6L	8	46	5 7	8
PED PUSH BUTTONS	LOOP TERMINAL	INPUT FILE POS.	DETECTOR NO.	PIN NO.	ATTRIBUTES	NEMA PHASE
P21,P22	TB8-4,6	I12U	25	67	2	2 PED
P41,P42	TB8-5,6	I12L	27	69	2	4 PED
P61,P62	TB8-7,9	I13U	26	68	2	6 PED
P81,P82	TB8-8,9	I13L	28	70	2	8 PED

NOTE: INSTALL DC ISOLATORS IN INPUT FILE SLOTS I12 AND I13

NOTE: PROGRAM DETECTOR DELAY AND CARRYOVER TIMES AS SPECIFIED ON SIGNAL DESIGN PLANS.

DETECTOR ATTRIBUTES LEGEND:
1-FULL TIME DELAY
2-PED CALL
3-RESERVED
4-COUNTING
5-EXTENSION
6-TYPE 3
7-CALLING
8-ALTERNATE

INPUT FILE POSITION LEGEND: J2L
FILE J
SLOT 2
LOWER

TYPICAL TOMAR FIELD WIRE DETAIL

(input file, rear view)

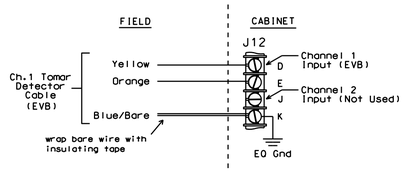

THIS ELECTRICAL DETAIL IS FOR
THE SIGNAL DESIGN: 05-1029
DESIGNED: September 2014
SEALED: 4/2/15
REVISED: N/A

Electrical Detail - Sheet 1 of 2 (Final)

ELECTRICAL AND PROGRAMMING DETAILS FOR:

NC 55 (North Alston Avenue) at Liberty St

Division 5 Durham County Durham

PLAN DATE: November 2014 REVIEWED BY: T. Joyce

PREPARED BY: B. Simmons REVIEWED BY:

REVISIONS	INIT.	DATE

Prepared in the Offices of:
Transportation Mobility and Safety Division
NORTH CAROLINA DEPARTMENT OF TRANSPORTATION
Signals Management Section
750 N.Greenfield Pkwy.Garner,NC 27529

SEAL
NORTH CAROLINA PROFESSIONAL SEAL 022013 ENGINEER GEORGE C. BROWN

DocuSigned by: George C. Brown 4/7/2015 DATE
F12601E7D8EB434...

SIG. INVENTORY NO. 05-1029

27 MAR 2015 10:48
S:\#TISSUE\#TIS Signals\#Workgroups\#Sig Mgmt\#Simmons\#Working Folder\#Electrical Details\#Division 05\#051029_sm_ele_xxx.dgn
bsimmons

PROJECT REFERENCE NO.	SHEET NO.
U-3308	Sig. 39.2

EMERGENCY VEHICLE PREEMPTION PROGRAMMING

1. Program EVB preempt as follows:
   Main Menu - 2) PREEMPT - 4) EMERGENCY VEHICLE
   EVB Clear = 2
   EVB Clearance Phases = 3,8

2. Program general preemption parameters as follows:
   Main Menu - 2) PREEMPT - 6) MISC PREEMPTION PARAMETERS
   Min Time Before PE ForceOff = 1

3. Ped Clear Before Preempt is a pedestrian timing parameter, and is programmed as follows:
   Main Menu - 1) PHASE - 5) PEDESTRIAN TIMING
   PHASE 2 MIN FDW = 5
   PHASE 4 MIN FDW = 7
   PHASE 6 MIN FDW = 4
   PHASE 8 MIN FDW = 7

Program extend time on optical detector units for 2.0 sec for EVB

FYA PPLT PROGRAMMING (SIGNAL HEAD 31)

1. Program Flashing Yellow Arrow phases as follows:
   Main Menu - 1) PHASE - 2) PHASE FUNCTIONS PAGE TWO
   PPLT FYA = PHASE 3

2. Assign output pin for Flashing Yellow Arrow as follows:
   Main Menu - 6) OUTPUTS - F) FYA PPLT
   Phase 3 = 96

3. Redirect RED and YELLOW outputs for the left turn phases as follows:
   Main Menu - 6) OUTPUTS - 8) REDIRECT PHASE
   Phase 3 RED = 94, Phase 3 YELLOW = 95

SPECIAL NOTE EV PREEMPT PROGRAMMING

Setting 'FYA DURING PREEMPT' to 'Y' eliminates yellow trap when transitioning to preempt from adjacent through phase.
Main Menu - 9) UTILITIES - 9) MISC
FYA DURING PREEMPT (Y/N) = Y

COUNTDOWN PEDESTRIAN SIGNAL OPERATION

Countdown Ped Signals are required to display timing only during Ped Clearance Interval. Consult Ped Signal Module user's manual for instructions on selecting this feature.

MIN WALK DURING PREEMPTION PROGRAMMING

To disable MIN WALK pedestrian timing during preemption, program the controller as follows:
Main Menu - 9) UTILITIES - 5) CONFIGURATION
EXTRA TWO = 3

FLASHER CIRCUIT MODIFICATION DETAIL

In order to insure that signals flash concurrently on the same approach, make the following flasher circuit changes:

1. On rear of PDA - Remove wire from Term. T2-4 and Terminate on T2-2.
2. On rear of PDA - Remove wire from Term. T2-5 and Terminate on T2-3.
3. Remove Flasher Unit 2.

The changes listed above ties all Phases and Overlaps to Flasher Unit 1.

OVERLAPS (1), (3) & (4) PROGRAMMING DETAIL

Program overlaps as follows:
Main Menu - 4) OVERLAP

OVERLAP [1]:
LOADSWITCH = 9
VEH SET 1 = 2,6
YELLOW CLEARANCE = 3.7
RED CLEARANCE = 2.4

Press "+" Twice

OVERLAP [3]:
LOADSWITCH = 11
VEH SET 1 = 2,6
YELLOW CLEARANCE = 3.7
RED CLEARANCE = 2.4

Press "+"

OVERLAP [4]:
LOADSWITCH = 12
VEH SET 1 = 4,8
YELLOW CLEARANCE = 4.4
RED CLEARANCE = 2.4

END OF OVERLAP PROGRAMMING

OVERLAP GREEN FLASH PROGRAMMING (SIGNAL HEAD 21, 41 & 61)

The following will cause the overlap green output to flash, which is wired to the FYA. Program as follows:

Main Menu - 1) PHASE - 2) PHASE FUNCTIONS PAGE TWO
OLAP G FL = 1, 3, 4

STARTUP CALLS PROGRAMMING

Prevents Veh Call to phase 3 during Startup. Phase 3 used only during Preempt.
Main Menu - 9) UTILITIES - 1) STARTUP
VEHICLE CALLS 2,4,6,8

LOAD RESISTOR INSTALLATION DETAIL

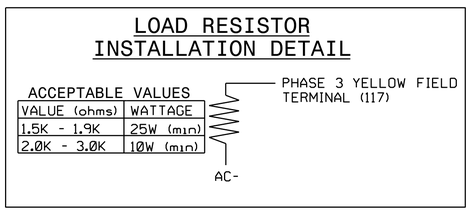

Electrical Detail - Sheet 2 of 2 (Final)

THIS ELECTRICAL DETAIL IS FOR
THE SIGNAL DESIGN: 05-1029
DESIGNED: September 2014
SEALED: 4/2/15
REVISED: N/A

ELECTRICAL AND PROGRAMMING DETAILS FOR:

NC 55 (North Alston Avenue) at Liberty St

Prepared in the Offices of:
Transportation Mobility and Safety Division
NORTH CAROLINA DEPARTMENT OF TRANSPORTATION
Signals Management Section
750 N.Greenfield Pkwy,Garner,NC 27529

Division 5 | Durham County | Durham
PLAN DATE: November 2014 | REVIEWED BY: T. Joyce
PREPARED BY: B. Simmons | REVIEWED BY:

REVISIONS	INIT.	DATE

SEAL
NORTH CAROLINA PROFESSIONAL SEAL 022013 ENGINEER GEORGE C. BROWN

DocuSigned by: George C. Brown 4/7/2015
F12601E0DBE1B34... DATE

SIG. INVENTORY NO. 05-1029

27-MAR-2015 10:18
S:*TISIGS\41TIS Signals\Workgroups\Sig Mgmt\Simmons\Working Folder*Electrical Details*Division 05*05I029_sm_ele_xxx.dgn
bsimmons

DocuSign Envelope ID: FA055805-FD5D-48EF-AFA4-989DE286E3B5

Design Loading for METAL POLE NO. 11, MAST ARM A

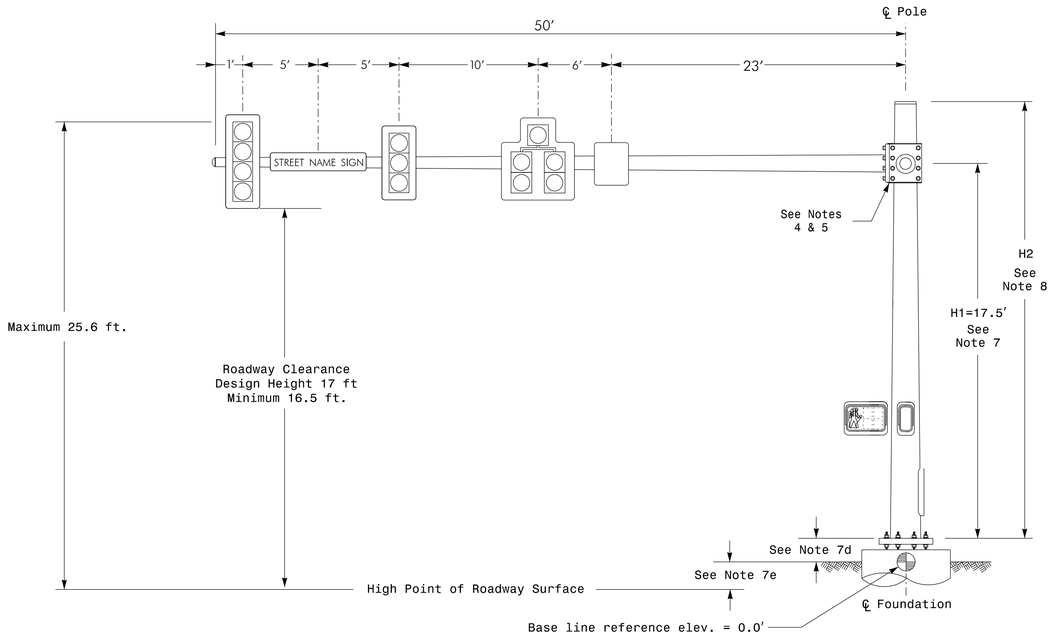

Elevation View @ 0°

Design Loading for METAL POLE NO. 11, MAST ARM B

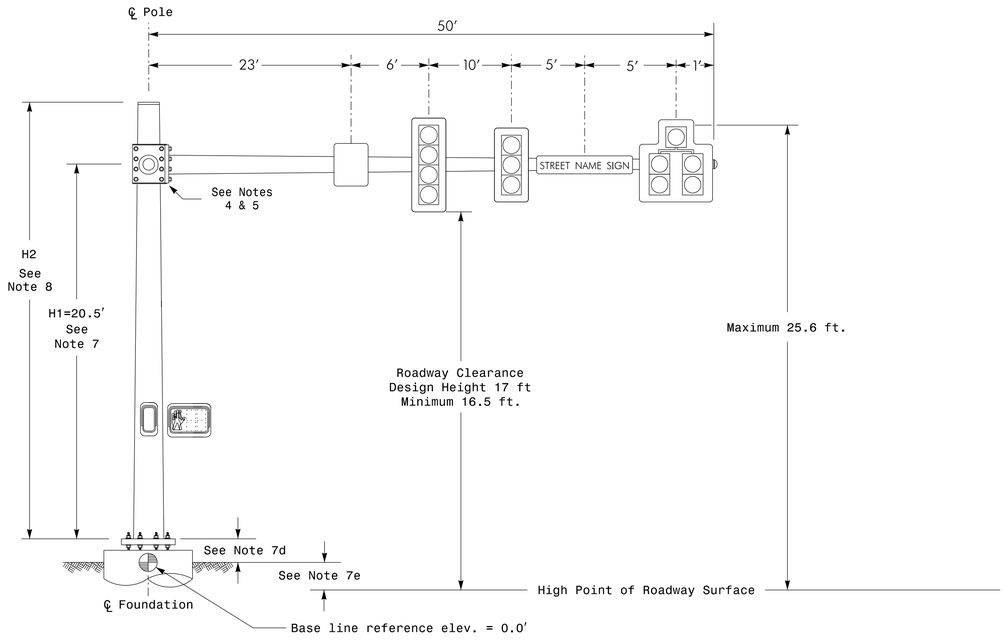

Elevation View @ 270°

SPECIAL NOTE

The contractor is responsible for verifying that the mast arm attachment height (H1) will provide the "Design Height" clearance from the roadway before submitting final shop drawings for approval. Verify elevation data below which was obtained by field measurement or from available project survey data.

Elevation Data for Mast Arm Attachment (H1)

Elevation Differences for:	Arm "A"	Arm "B"
Baseline reference point at ℄ Foundation @ ground level	0.0 ft.	0.0 ft.
Elevation difference at High point of roadway surface	-2.09 ft.	+1.08 ft.
Elevation difference at Edge of travelway or face of curb	+0.50 ft.	+0.88 ft.

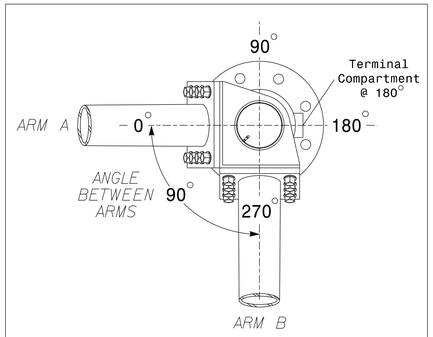

POLE RADIAL ORIENTATION

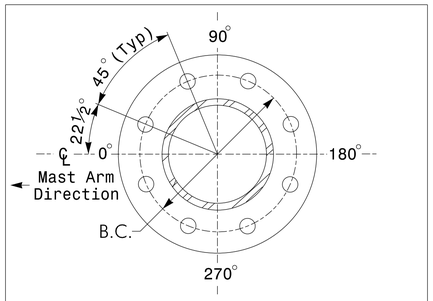

8 BOLT BASE PLATE DETAIL

See Note 6

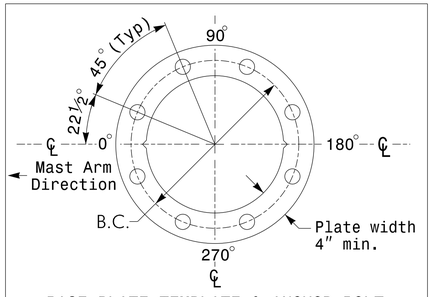

BASE PLATE TEMPLATE & ANCHOR BOLT LOCK PLATE DETAIL

For 8 Bolt Base Plate

METAL POLE No. 11

PROJECT REFERENCE NO.	SHEET NO.
U-3308	Sig. 39.3

MAST ARM LOADING SCHEDULE

LOADING SYMBOL	DESCRIPTION	AREA	SIZE	WEIGHT
	SIGNAL HEAD 12"–4 SECTION WITH 8" BACKPLATE RIGID MOUNTED	15.8 S.F.	31.5" W X 72.0" L	78 LBS
	SIGNAL HEAD 12"–3 SECTION WITH 8" BACKPLATE RIGID MOUNTED	12.8 S.F.	31.5" W X 58.5" L	63 LBS
	SIGNAL HEAD 12"–5 SECTION WITH 8" BACKPLATE RIGID MOUNTED	20.7 S.F.	48.0" W X 62.0" L	107 LBS
STREET NAME SIGN	STREET NAME SIGN RIGID MOUNTED	12.0 S.F.	18.0" W X 96.0" L	27 LBS
	PEDESTRIAN SIGNAL HEAD WITH MOUNTING HARDWARE	2.2 S.F.	18.5" W X 17.0" L	21 LBS
	SIGN RIGID MOUNTED	7.5 S.F.	30.0" W X 36.0" L	14 LBS

NOTES

Design Reference Material

1. Design the traffic signal structure and foundation in accordance with:
   - The 5th Edition 2009 AASHTO "Standard Specifications for Structural Supports for Highway Signs, Luminaires, and Traffic Signals, including all of the latest interim revisions.
   - The 2012 NCDOT "Standard Specifications for Roads and Structures". The latest addenda to these specifications can be found in the traffic signal project special provisions.
   - The 2012 NCDOT Roadway Standard Drawings.
   - The traffic signal project plans and special provisions.
   - The NCDOT "Metal Pole Standards" located at the following NCDOT website: https://connect.ncdot.gov/resources/safety/Pages/ITS-Design-Resources.aspx

Design Requirements

2. Design the traffic signal structure using the loading conditions shown in the elevation views. These are anticipated worst case "Design loads" and may not represent the actual loads that will be applied at the time of the installation. The contractor should refer to the traffic signal plans for the actual loads that will be applied at the time of the installation.
3. Design all signal supports using stress ratios that do not exceed 0.9.
4. The camber design for mast arm deflection should provide an appearance of a low pitched arch where the tip or the free end of the mast arm does not deflect below horizontal when fully loaded.
5. A clamp-type bolted mast arm-to-pole connection may be used instead of the welded ring stiffened box connection shown as long as the connection meets all of the design requirements. This requires staggering the connections. Use elevation data for each arm to determine appropriate arm connection points.
6. Design base plate with 8 anchor bolt holes. Provide 2 inch x 60 inch anchor bolts.
7. The mast arm attachment height (H1) shown is based on the following design assumptions:
   a. Mast arm slope and deflection are not considered in determining the arm attachment height as they are assumed to offset each other.
   b. Signal heads attached to the mast arm are rigid mounted and vertically centered on the arm.
   c. The roadway clearance height for design is as shown in the elevation views.
   d. The top of the pole base plate is .75 feet above the ground elevation.
   e. Refer to the Elevation Data chart for elevation differences between the proposed foundation ground level and the high point on the roadway.
8. The pole manufacturer will determine the total height (H2) of the pole using the greater of the following:
   - Mast arm attachment height (H1) plus 2 feet, or
   - H1 plus ½ of the total height of the mast arm attachment assembly plus 1 foot.
9. If pole location adjustments are required, the contractor must gain approval from the engineer as this may affect the mast arm lengths and arm attachment heights. The contractor may contact the Signal Design Structural Engineer for assistance at (919) 773-2800.
10. The contractor is responsible for verifying that the mast arm lengths shown will allow proper positioning of the signal heads over the roadway.
11. The contractor is responsible for providing soil penetration testing data (SPT) to the pole manufacturer so site specific foundations can be designed.

SEPI ENGINEERING & CONSTRUCTION
1025 Wade Avenue
Raleigh, NC 27605
Tel:919-789-9977
Fax:919-789-9591
License #: C-2197

NCDOT Wind Zone 4 (90 mph)

Prepared for the Offices of: Transportation Mobility and Safety Division, NC Department of Transportation, Signal Design Section
750 N.Greenfield Pkwy,Garner,NC 27529

NC 55 (North Alston Avenue) at Liberty Street

Division 5 Durham County Durham

PLAN DATE: December 2014 REVIEWED BY: J Hochanadel

PREPARED BY: M Copple REVIEWED BY:

SCALE 0 N/A N/A

REVISIONS	INIT.	DATE

SEAL: NORTH CAROLINA PROFESSIONAL SEAL 28430 ENGINEER JEFFREY P. HOCHANADEL

DocuSigned by: 5078TD2BF98C498...

5/13/2015
DATE

SIG. INVENTORY NO. 05-1029

5/13/2015
C:\Projects\Transportation\TIP\R13.017.00 NCDOT 2012 Traffic LSA\TIP\R13.017.03 (U-3308 Signals)\Traffic\Signals\Design\Signals\Metal Poles\05-1029-METAL POLE 11 and 12.dgn
jkapaska

DocuSign Envelope ID: FA055805-FD5D-48EF-AFA4-989DE286E3B5

Design Loading for METAL POLE NO. 12, MAST ARM A

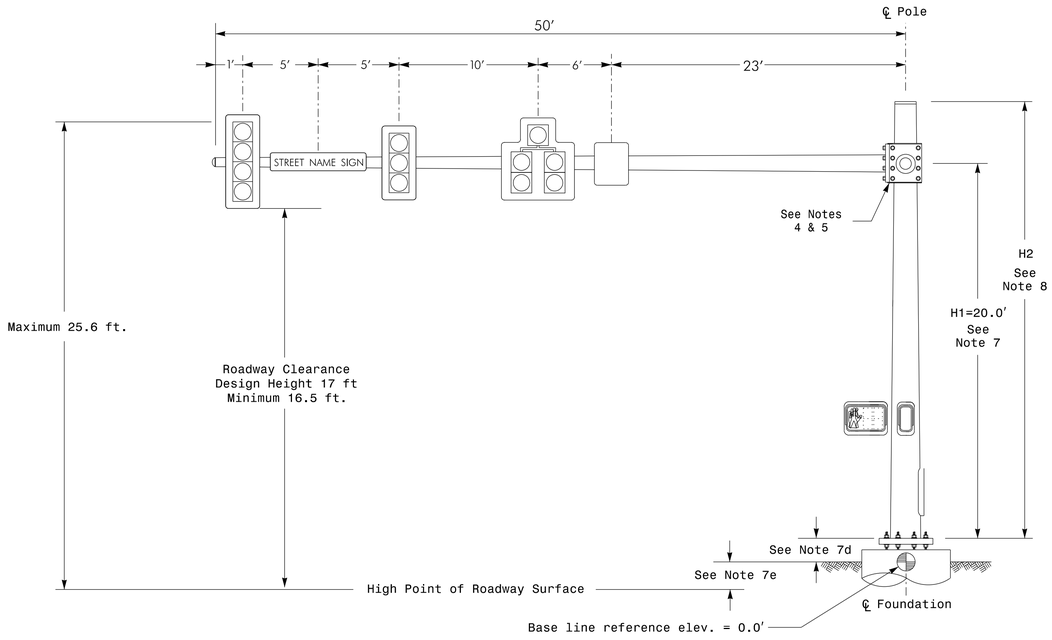

Elevation View @ 0°

Design Loading for METAL POLE NO. 12, MAST ARM B

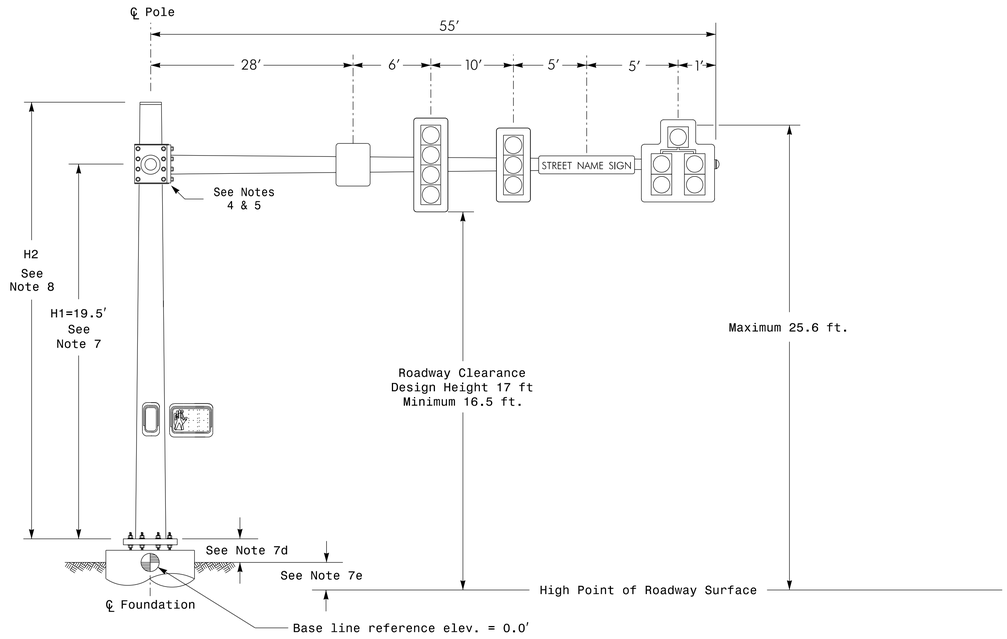

Elevation View @ 270°

SPECIAL NOTE

The contractor is responsible for verifying that the mast arm attachment height (H1) will provide the "Design Height" clearance from the roadway before submitting final shop drawings for approval. Verify elevation data below which was obtained by field measurement or from available project survey data.

Elevation Data for Mast Arm Attachment (H1)

Elevation Differences for:	Arm "A"	Arm "B"
Baseline reference point at ℄ Foundation @ ground level	0.0 ft.	0.0 ft.
Elevation difference at High point of roadway surface	+0.69 ft.	-0.04 ft.
Elevation difference at Edge of travelway or face of curb	+0.50 ft.	-0.18 ft.

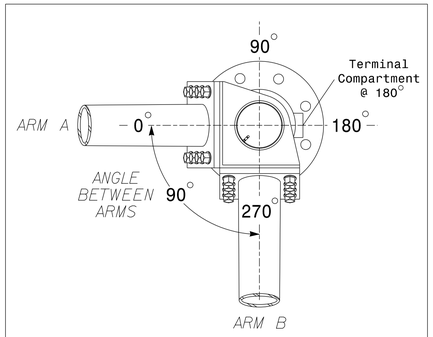

POLE RADIAL ORIENTATION

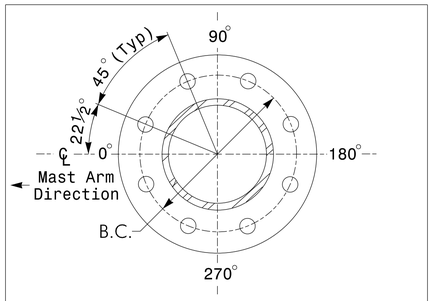

8 BOLT BASE PLATE DETAIL

See Note 6

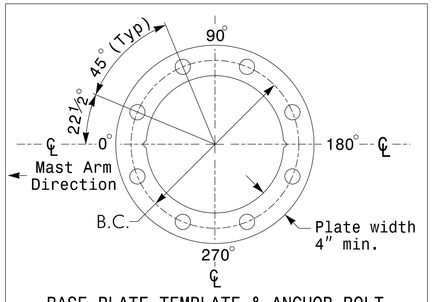

BASE PLATE TEMPLATE & ANCHOR BOLT LOCK PLATE DETAIL

For 8 Bolt Base Plate

METAL POLE No. 12

PROJECT REFERENCE NO.	SHEET NO.
U-3308	Sig. 39.4

MAST ARM LOADING SCHEDULE

LOADING SYMBOL	DESCRIPTION	AREA	SIZE	WEIGHT
	SIGNAL HEAD 12″–4 SECTION WITH 8″ BACKPLATE RIGID MOUNTED	15.8 S.F.	31.5″ W X 72.0″ L	78 LBS
	SIGNAL HEAD 12″–3 SECTION WITH 8″ BACKPLATE RIGID MOUNTED	12.8 S.F.	31.5″ W X 58.5″ L	63 LBS
	SIGNAL HEAD 12″–5 SECTION WITH 8″ BACKPLATE RIGID MOUNTED	20.7 S.F.	48.0″ W X 62.0″ L	107 LBS
STREET NAME SIGN	STREET NAME SIGN RIGID MOUNTED	12.0 S.F.	18.0″ W X 96.0″ L	27 LBS
	PEDESTRIAN SIGNAL HEAD WITH MOUNTING HARDWARE	2.2 S.F.	18.5″ W X 17.0″ L	21 LBS
	SIGN RIGID MOUNTED	7.5 S.F.	30.0″ W X 36.0″ L	14 LBS

NOTES

Design Reference Material

1. Design the traffic signal structure and foundation in accordance with:
   - The 5th Edition 2009 AASHTO "Standard Specifications for Structural Supports for Highway Signs, Luminaires, and Traffic Signals, including all of the latest interim revisions.
   - The 2012 NCDOT "Standard Specifications for Roads and Structures". The latest addenda to these specifications can be found in the traffic signal project special provisions.
   - The 2012 NCDOT Roadway Standard Drawings.
   - The traffic signal project plans and special provisions.
   - The NCDOT "Metal Pole Standards" located at the following NCDOT website: https://connect.ncdot.gov/resources/safety/Pages/ITS-Design-Resources.aspx

Design Requirements

2. Design the traffic signal structure using the loading conditions shown in the elevation views. These are anticipated worst case "Design loads" and may not represent the actual loads that will be applied at the time of the installation. The contractor should refer to the traffic signal plans for the actual loads that will be applied at the time of the installation.
3. Design all signal supports using stress ratios that do not exceed 0.9.
4. The camber design for mast arm deflection should provide an appearance of a low pitched arch where the tip or the free end of the mast arm does not deflect below horizontal when fully loaded.
5. A clamp-type bolted mast arm-to-pole connection may be used instead of the welded ring stiffened box connection shown as long as the connection meets all of the design requirements. This requires staggering the connections. Use elevation data for each arm to determine appropriate arm connection points.
6. Design base plate with 8 anchor bolt holes. Provide 2 inch x 60 inch anchor bolts.
7. The mast arm attachment height (H1) shown is based on the following design assumptions:
   a. Mast arm slope and deflection are not considered in determining the arm attachment height as they are assumed to offset each other.
   b. Signal heads attached to the mast arm are rigid mounted and vertically centered on the arm.
   c. The roadway clearance height for design is as shown in the elevation views.
   d. The top of the pole base plate is .75 feet above the ground elevation.
   e. Refer to the Elevation Data chart for elevation differences between the proposed foundation ground level and the high point on the roadway.
8. The pole manufacturer will determine the total height (H2) of the pole using the greater of the following:
   - Mast arm attachment height (H1) plus 2 feet, or
   - H1 plus ½ of the total height of the mast arm attachment assembly plus 1 foot.
9. If pole location adjustments are required, the contractor must gain approval from the engineer as this may affect the mast arm lengths and arm attachment heights. The contractor may contact the Signal Design Structural Engineer for assistance at (919) 773-2800.
10. The contractor is responsible for verifying that the mast arm lengths shown will allow proper positioning of the signal heads over the roadway.
11. The contractor is responsible for providing soil penetration testing data (SPT) to the pole manufacturer so site specific foundations can be designed.

SEPI ENGINEERING & CONSTRUCTION
1025 Wade Avenue
Raleigh, NC 27605
Tel:919-789-9977
Fax:919-789-9591
License #: C-2197

NCDOT Wind Zone 4 (90 mph)

Prepared for the Offices of: Transportation Mobility and Safety Division, NC Department of Transportation, Signal Design Section
750 N.Greenfield Pkwy,Garner,NC 27529

NC 55 (North Alston Avenue) at Liberty Street

Division 5 Durham County Durham

PLAN DATE: December 2014 REVIEWED BY: J Hochanadel

PREPARED BY: M Copple REVIEWED BY:

SCALE 0 N/A N/A

REVISIONS	INIT.	DATE

SEAL: NORTH CAROLINA PROFESSIONAL SEAL 28430 ENGINEER JEFFREY P. HOCHANADEL

DocuSigned by: 5/13/2015 DATE

SIG. INVENTORY NO. 05-1029

5/13/2015
C:\Projects\Projection\TIP\R13.017.00 NCDOT 2012 Traffic LSA\TIP\R13.017.03 (U-3308 Signals)\Traffic\Signals\Design\Signals\Metal Poles\05-1029-METAL POLE 11 and 12.dgn
JKopaskie

DocuSign Envelope ID: 2B82073C-8CA6-44D2-96FA-5BE27AB92A1C

PROJECT REFERENCE NO.	SHEET NO.
U-3308	Sig. 40.0

3 Phase
Fully Actuated
(Durham Signal System)

PHASING DIAGRAM

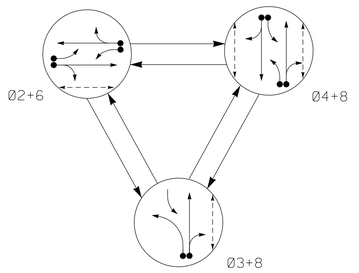

PHASING DIAGRAM DETECTION LEGEND

- DETECTED MOVEMENT
- UNDETECTED MOVEMENT (OVERLAP)
- UNSIGNALIZED MOVEMENT
- PEDESTRIAN MOVEMENT

TABLE OF OPERATION

SIGNAL FACE	PHASE Ø2+6	Ø3+8	Ø4+8	FLOAT
21	~~F Y~~	~~R~~	~~R~~	~~Y~~
22,23	G	R	R	Y
31	~~R~~	~~F Y~~	~~F Y~~	~~R~~
41	~~R~~	~~F Y~~	~~F Y~~	~~R~~
42,43	R	R	G	R
61	~~F Y~~	~~R~~	~~R~~	~~Y~~
62,63	G	R	R	Y
81,82	R	G	G	R
P21,P22	W	DW	DW	DRK
P41,P42	DW	DW	W	DRK
P81,P82	DW	W	W	DRK

2033 SOFTWARE w/ 2070 CONTROLLER
LOOP & DETECTOR UNIT INSTALLATION CHART

INDUCTIVE LOOPS						DETECTOR PROGRAMMING													
							TIMING		ATTRIBUTES									STATUS	
LOOP NO.	SIZE (ft)	TURNS	DIST. FROM STOPBAR (ft)	NEW	EXISTING	NEMA PHASE	DELAY	CARRY (STRETCH)	1 FULL TIME OR PED	2 PEDESTRIAN CALL	3 RESERVED	4 COUNT	5 EXTENSION	6 TYPE 3	7 CALLING	8 ALTERNATE	SYSTEM LOOPS	NEW	EXISTING
2A	6x6	*	70	*	-	2	- SEC.	- SEC.	-	-	-	-	X	-	X	-	-	*	-
2B	6x40	*	0	*	-	2	- SEC.	- SEC.	-	-	-	-	X	-	X	-	-	*	-
3A	6x40	*	0	*	-	3	15 SEC.	- SEC.	-	-	-	-	X	-	X	-	-	*	-
						8	3 SEC.	- SEC.	-	-	-	-	X	-	X	-	-	*	-
4A	6x40	*	0	*	-	4	3 SEC.	- SEC.	-	-	-	-	X	-	X	-	-	*	-
4B	6x40	*	0	*	-	4	10 SEC.	- SEC.	-	-	-	-	X	-	X	-	-	*	-
6A	6x6	*	70	*	-	6	- SEC.	- SEC.	-	-	-	-	X	-	X	-	-	*	-
6B	6x40	*	0	*	-	6	- SEC.	- SEC.	-	-	-	-	X	-	X	-	-	*	-
8A	6x40	*	0	*	-	8	10 SEC.	- SEC.	-	-	-	-	X	-	X	-	-	*	-
PEDESTRIAN DETECTION																			
P21,P22	N/A	N/A	N/A	X	-	2	- SEC.	- SEC.	-	X	-	-	-	-	-	-	-	X	-
P41,P42	N/A	N/A	N/A	X	-	4	- SEC.	- SEC.	-	X	-	-	-	-	-	-	-	X	-
P81,P82	N/A	N/A	N/A	X	-	8	- SEC.	- SEC.	-	X	-	-	-	-	-	-	-	X	-

* Video Detection Zone

SIGNAL FACE I.D.

All Heads L.E.D.

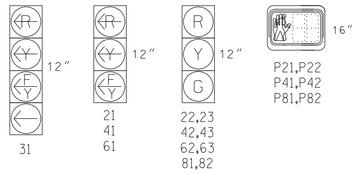

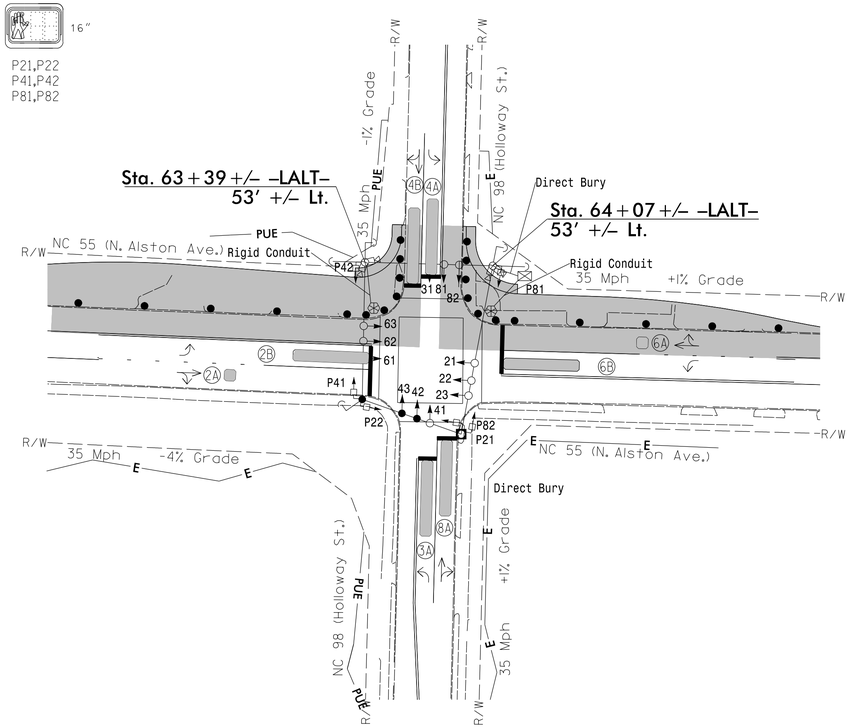

TIMING CHART
2033 SOFTWARE w/2070 CONTROLLER

PHASE	Ø2	Ø3	Ø4	Ø6	Ø8	OL1	OL3	OL4
MINIMUM INITIAL *	10 SEC.	7 SEC.	7 SEC.	10 SEC.	7 SEC.	0 SEC.	0 SEC.	0 SEC.
VEHICLE EXTENSION *	3.0 SEC.	2.0 SEC.	2.0 SEC.	3.0 SEC.	2.0 SEC.			
YELLOW CHANGE INT.	4.1 SEC.	3.9 SEC.	3.9 SEC.	4.1 SEC.	3.9 SEC.	4.1 SEC.	4.1 SEC.	3.9 SEC.
RED CLEARANCE	1.1 SEC.	2.3 SEC.	1.5 SEC.	1.1 SEC.	1.5 SEC.	1.1 SEC.	1.1 SEC.	1.5 SEC.
MAXIMUM LIMIT *	50 SEC.	15 SEC.	35 SEC.	50 SEC.	35 SEC.			
RECALL POSITION	VEH. RECALL	NONE	NONE	VEH. RECALL	NONE			
VEHICLE CALL MEMORY	YELLOW LOCK	NONE	NONE	YELLOW LOCK	NONE			
DOUBLE ENTRY	OFF	OFF	ON	OFF	ON			
WALK *	4 SEC.	- SEC.	4 SEC.	- SEC.	4 SEC.			
FLASHING DON'T WALK	8 SEC.	- SEC.	11 SEC.	- SEC.	11 SEC.			
TYPE 3 LIMIT	- SEC.	- SEC.	- SEC.	- SEC.	- SEC.			
ALTERNATE EXTENSION	- SEC.	- SEC.	- SEC.	- SEC.	- SEC.			
ADD PER VEHICLE *	- SEC.	- SEC.	- SEC.	- SEC.	- SEC.			
MAXIMUM INITIAL *	- SEC.	- SEC.	- SEC.	- SEC.	- SEC.			
MAXIMUM GAP*	3.0 SEC.	2.0 SEC.	2.0 SEC.	3.0 SEC.	2.0 SEC.			
REDUCE 0.1 SEC EVERY *	- SEC.	- SEC.	- SEC.	- SEC.	- SEC.			
MINIMUM GAP	3.0 SEC.	2.0 SEC.	2.0 SEC.	3.0 SEC.	2.0 SEC.			

* These values may be field adjusted. Do not adjust Min Green and Extension times for phases 2 and 6 lower than what is shown. Min Green for all other phases should not be lower than 4 seconds.

NOTES

1. Refer to "Road Standard Drawings NCDOT" dated January 2012, "Standard Specifications for Roads and Structures" dated January 2012.
2. Do not program signal for late night flashing operation unless otherwise directed by the Engineer.
3. Phase 3 may be lagged.
4. Set all detector units to presence mode.
5. Locate new cabinet as to not obstruct sight distance of vehicles turning right on red.
6. Program all timing information into phase banks 1,2, and 3 unless otherwise noted.
7. Set phase bank 3 maximum limit to 250 seconds for phases used.
8. Omit "WALK" and flashing "DON'T WALK" with no pedestrian calls.
9. Program pedestrian heads to countdown the flashing "Don't Walk" time.
10. Pavement markings are existing.
11. Maximum times shown in timing chart are for free-run operation only. Coordinated signal system timing values supersede these values.
12. Pedestrian pedestals are conceptual and shown for reference only. See sheets P1-P3 for pushbutton location details.
13. Contractor to maintain pedestrian movements through construction areas.

LEGEND

PROPOSED		EXISTING
○→	Traffic Signal Head	●→
◐→	Modified Signal Head	N/A
⊣	Sign	⊣
□↓	Pedestrian Signal Head With Push Button & Sign	■↓
○→	Signal Pole with Guy	●→
○↓	Signal Pole with Sidewalk Guy	●↓
▭	Inductive Loop Detector	▭
⊠	Controller & Cabinet	⊠
□	Junction Box	■
-----	2-in Underground Conduit	-----
N/A	Right of Way	-----
→	Directional Arrow	→
⊛	Type I Pushbutton Post	☢
▭	Work Area	N/A
●	Drums	N/A
E	Construction Easement	N/A
PDE	Permanent Utility Easement	N/A
———	Rigid Conduit	----------
———	Direct Bury	----------
▭◁	Video Detector	■◀
▭	Video Detection Area	▭

Signal Upgrade - Temporary Design 1 (TMP Phase I, Steps 1-10)

SEPI ENGINEERING & CONSTRUCTION
1025 Wade Avenue
Raleigh, NC 27605
Tel:919-789-9977
Fax:919-789-9591
License #: C-2197

Prepared for the Offices of:
Transportation Mobility and Safety Division
Signal Design Section
750 N.Greenfield Pkwy,Garner,NC 27529

NC 55 (North Alston Avenue)
at
US 70 (Holloway Street)
Division 5 Durham County Durham

PLAN DATE: September 2014	REVIEWED BY: J Hochanadel
PREPARED BY: C Lawson	REVIEWED BY:

REVISIONS	INIT.	DATE

SCALE 0 40 1"=40'

SEAL
NORTH CAROLINA PROFESSIONAL SEAL 28430 ENGINEER JEFFREY P. HOCHANADEL

DocuSigned by: 4/02/15
5078102B5F8C499...
DATE

SIG. INVENTORY NO. 05-1027TI

3/20/2015
G:\47\Transportation\TR13.017.00 NCDOT 2012 Traffic LSA\TR13.017.03 (U-3308 Signals\Traffic\Signals\Design\Signals\TEMP SIGNALS WITH VIDEO\05-1027\05-1027TI.dgn
hpark

PROJECT REFERENCE NO.	SHEET NO.
U-3308	Sig.40.1

EDI MODEL 2018ECL-NC CONFLICT MONITOR PROGRAMMING DETAIL

(remove jumpers and set switches as shown)

REMOVE DIODE JUMPERS 2-6, 2-9, 2-11, 2-13, 3-8, 3-10, 3-12, 3-16, 4-8, 4-10, 4-12, 4-14, 4-16, 6-9, 6-11, 6-13, 8-10, 8-12, 8-14, 8-16, 9-11, 9-13, 10-12, 10-14, 10-16, 11-13, 12-14, 12-16, and 14-16.

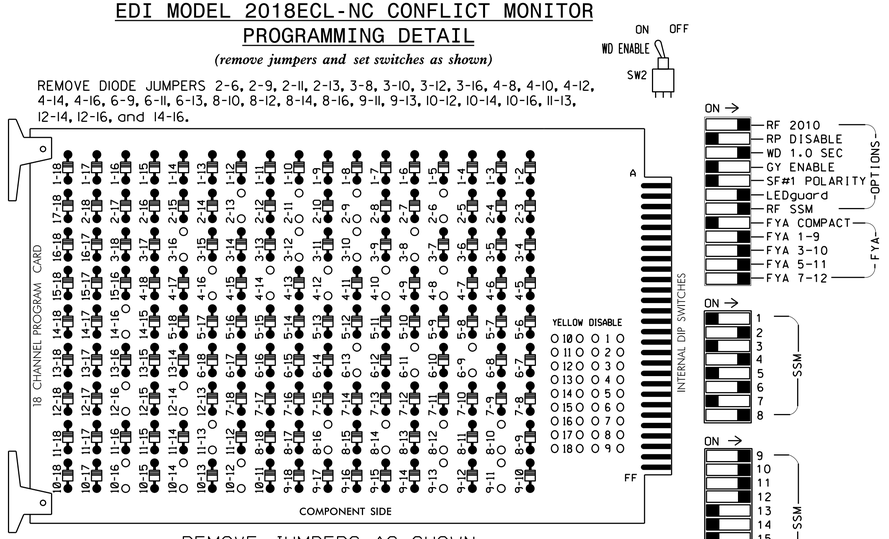

REMOVE JUMPERS AS SHOWN

NOTES:

1. Card is provided with all diode jumpers in place. Removal of any jumper allows its channels to run concurrently.
2. Ensure jumpers SEL2-SEL5 and SEL9 are present on the monitor board.
3. Ensure that Red Enable is active at all times during normal operation.
4. Connect serial cable from conflict monitor to comm. port 1 of 2070 controller. Ensure conflict monitor communicates with 2070.

■ = DENOTES POSITION OF SWITCH

NOTES

1. To prevent "flash-conflict" problems, insert red flash program blocks for all unused vehicle load switches in the output file. Verify that signal heads flash in accordance with the signal plans.
2. Program controller to Start Up in phases 2 and 6 green.
3. Set power-up flash time to 0 seconds within the controller programming. The conflict monitor will govern startup flash. Ensure STARTUP "RED START" is set to 0 seconds.
4. Enable Simultaneous Gap-Out feature for all phases.
5. Program all timing information into phase banks 1, 2, and 3 unless otherwise noted.
6. Set phase bank 3 maximum limit to 250 seconds for phases used.
7. Program phases 4 and 8 for Double Entry.
8. Ensure start up flash phases are coordinated with flash program block assignments.
9. Program Startup Ped Calls for phases 2, 4 and 8.
10. Set the Red Revert interval on the controller to 1 second.
11. This cabinet and controller are part of the Durham Signal System.

EQUIPMENT INFORMATION

CONTROLLER.....2070E
CABINET.....332 W/ AUX
SOFTWARE.....McCAIN 2033
CABINET MOUNT.....BASE
OUTPUT FILE POSITIONS...18 WITH AUX FILE
LOAD SWITCHES USED.....S2,S3,S4,S5,S6,S8,S11,S12, AUX S1,AUX S2,AUX S4,AUX S5
PHASES USED.....2,3,4,6,8,2 PED,4 PED,8 PED
OVERLAP 1.....2
OVERLAP 2.....*
OVERLAP 3.....6
OVERLAP 4.....8

* See FYA PPLT Programming Detail on Sheet 2.

SIGNAL HEAD HOOK-UP CHART

LOAD SWITCH NO.	S1	S2	S3	S4	S5	S6	S7	S8	S9	S10	S11	S12	AUX S1	AUX S2	AUX S3	AUX S4	AUX S5	AUX S6
CMU CHANNEL NO.	1	2	13	3	4	14	5	6	15	7	8	16	9	10	17	11	12	18
PHASE	1	2	2 PED	3	4	4 PED	5	6	6 PED	7	8	8 PED	OL1	OL2	SPARE	OL3	OL4	SPARE
SIGNAL HEAD NO.	NU	22,23	P21, P22	31★	42,43	P41, P42	NU	62,63	NU	NU	81,82	P81, P82	61★	31★	NU	21★	41★	NU
RED		128			101			134			107							
YELLOW		129		*	102			135			108							
GREEN		130			103			136			109							
RED ARROW													A121	A124		A114	A101	
YELLOW ARROW													A122	A125		A115	A102	
FLASHING YELLOW ARROW													A123	A126		A116	A103	
GREEN ARROW				118														
✋			113			104						110						
🚶			115			106						112						

NU = Not Used

* Denotes install load resistor. See load resistor installation detail this sheet.

★ See pictorial of head wiring in detail below.

4 SECTION FYA PPLT SIGNAL WIRING DETAIL

(wire signal heads as shown)

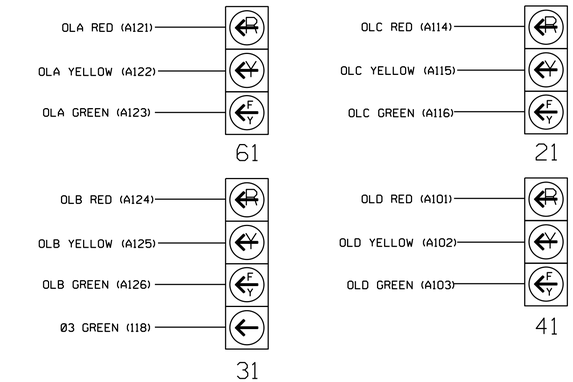

INPUT FILE POSITION LAYOUT

(front view)

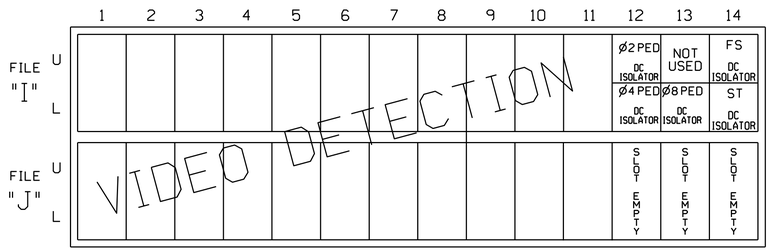

EX.: 1A, 2A, ETC. = LOOP NO.'S

FS = FLASH SENSE
ST = STOP TIME

INPUT FILE CONNECTION & PROGRAMMING CHART

LOOP NO.	LOOP TERMINAL	INPUT FILE POS.	DETECTOR NO.	PIN NO.	ATTRIBUTES	NEMA PHASE
PED PUSH BUTTONS						
P21,P22	TB8-4,6	I12U	25	67	2	2 PED
P41,P42	TB8-5,6	I12L	27	69	2	4 PED
P81,P82	TB8-8,9	I13L	28	70	2	8 PED

INPUT FILE POSITION LEGEND: J2L
- FILE J
- SLOT 2
- LOWER

DETECTOR ATTRIBUTES LEGEND:
1-FULL TIME DELAY
2-PED CALL
3-RESERVED
4-COUNTING
5-EXTENSION
6-TYPE 3
7-CALLING
8-ALTERNATE

LOAD RESISTOR INSTALLATION DETAIL

(install resistors as shown below)

ACCEPTABLE VALUES	
VALUE (ohms)	WATTAGE
1.5K - 1.9K	25W (min)
2.0K - 3.0K	10W (min)

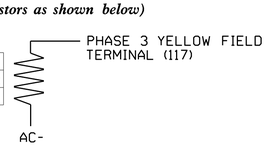

SPECIAL DETECTOR NOTE

Install a video detection system for vehicle detection. Perform installation according to manufacturer's directions and NCDOT engineer-approved mounting locations to accomplish the detection schemes shown on the Signal Design Plans.

THIS ELECTRICAL DETAIL IS FOR THE SIGNAL DESIGN: 05-1027T1
DESIGNED: September 2014
SEALED: 4-02-15
REVISED: N/A

Electrcial Detail - Sheet 1 of 2

ELECTRICAL AND PROGRAMMING DETAILS FOR:

Prepared in the Offices of:
Transportation Mobility and Safety Division
Traffic Engineering Branch
Signals Management Section
NORTH CAROLINA DEPARTMENT OF TRANSPORTATION
750 N.Greenfield Pkwy,Garner,NC 27529

NC 55 (North Alston Avenue) at NC 70 (Holloway Street)

Division 5 | Durham County | Durham

PLAN DATE: November 2014 | REVIEWED BY: DS JTR
PREPARED BY: James Peterson | REVIEWED BY:

REVISIONS	INIT.	DATE

SEAL
NORTH CAROLINA PROFESSIONAL SEAL 008453 ENGINEER JOHN T. ROWE, JR.

DocuSigned by: John T. Rowe, Jr. 4/2/2015
641D60C145E6485...
DATE

SIG. INVENTORY NO. 05-1027T1

31-MAR-2015 14:56
S:\★TISAS\#TIS Signals★\Workgroups★Sig Mgmt★Peterson★\05-1027_sm_ele_20150106.dgn
j★peterson

PROJECT REFERENCE NO.	SHEET NO.
U-3308	Sig.40.2

OVERLAPS [1-4] PROGRAMMING DETAIL

Program overlaps as follows:
Main Menu - 4) OVERLAP

```
OVERLAP [1]:
                LOADSWITCH = 9        NOTE:  FOR SIGNAL HEAD 61
                VEH SET 1  = 2
          YELLOW CLEARANCE = 4.1
             RED CLEARANCE = 1.1

PRESS '+' TWICE

 OVERLAP [3]:
                 LOADSWITCH = 11       NOTE:  FOR SIGNAL HEAD 21
                 VEH SET 1  = 6
           YELLOW CLEARANCE = 4.1
              RED CLEARANCE = 1.1

 PRESS '+'

 OVERLAP [4]:
                 LOADSWITCH = 12       NOTE:  FOR SIGNAL HEAD 41
                 VEH SET 1  = 8
           YELLOW CLEARANCE = 3.9
              RED CLEARANCE = 1.5

      END OF OVERLAP PROGRAMMING
```

FYA PPLT PROGRAMMING

1. Program Flashing Yellow Arrow phases as follows:
   Main Menu - 1) PHASE - 2) PHASE FUNCTIONS PAGE TWO
   PPLT FYA = PHASE 3

2. Assign output pin for Flashing Yellow Arrow as follows:
   Main Menu - 6) OUTPUTS - F) FYA PPLT
   Phase 3 = 96

3. Redirect RED and YELLOW outputs for the left turn phases as follows:
   Main Menu - 6) OUTPUTS - 8) REDIRECT PHASE
   Phase 3 RED = 94, Phase 3 YELLOW = 95

COUNTDOWN PEDESTRIAN SIGNAL OPERATION

Countdown Ped Signals are required to display timing only during Ped Clearance Interval. Consult Ped Signal Module user's manual for instructions on selecting this feature.

FLASHER CIRCUIT MODIFICATION DETAIL

IN ORDER TO INSURE THAT SIGNALS FLASH CONCURRENTLY ON THE SAME APPROACH, MAKE THE FOLLOWING FLASHER CIRCUIT CHANGES:

1. ON REAR OF PDA - REMOVE WIRE FROM TERM. T2-4 AND TERMINATE ON T2-2.
2. ON REAR OF PDA - REMOVE WIRE FROM TERM. T2-5 AND TERMINATE ON T2-3.
3. REMOVE FLASHER UNIT 2.

THE CHANGES LISTED ABOVE TIES ALL PHASES AND OVERLAPS TO FLASHER UNIT 1.

THIS ELECTRICAL DETAIL IS FOR
THE SIGNAL DESIGN: 05-1027T1
DESIGNED: September 2014
SEALED: 4-02-15
REVISED: N/A

OVERLAP GREEN FLASH PROGRAMMING FOR 3 SECTION FYA

The following will cause the overlap green outputs to flash, which are wired to the flashing yellow arrow. Program as follows:

Main Menu - 1) PHASE - 2) PHASE FUNCTIONS PAGE TWO
OLAP G FL = 1, 3, 4

Electrcial Detail - Sheet 2 of 2

ELECTRICAL AND PROGRAMMING DETAILS FOR:

Prepared in the Offices of:
Transportation Mobility and Safety Division
STATE OF NORTH CAROLINA DEPARTMENT OF TRANSPORTATION
Signal Management Section
750 N.Greenfield Pkwy,Garner,NC 27529

NC 55 (North Alston Avenue)
at
NC 70 (Holloway Street)

Division 5 Durham County Durham

PLAN DATE: November 2014	REVIEWED BY: JTR		
PREPARED BY: James Peterson	REVIEWED BY:		
REVISIONS		INIT.	DATE

SEAL
NORTH CAROLINA PROFESSIONAL SEAL 008453 ENGINEER JOHN T. ROWE, JR.

DocuSigned by: John T. Rowe, Jr. 4/2/2015
DATE
SIG. INVENTORY NO. 05-1027T1

3-MAR-2015 14:58
S:\TS&SU\TS Signals\Workgroups\Sig Man\Peterson\051027_sm_ele_20150106.dgn
jtpeterson

DocuSign Envelope ID: 2B82073C-8CA6-44D2-96FA-5BE27AB92A1C

PROJECT REFERENCE NO.	SHEET NO.
U-3308	Sig. 41.0

PHASING DIAGRAM

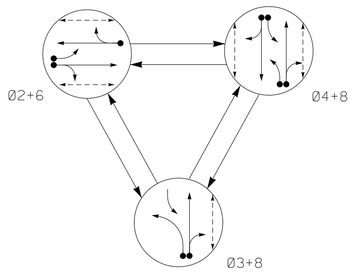

PHASING DIAGRAM DETECTION LEGEND

- DETECTED MOVEMENT
- UNDETECTED MOVEMENT (OVERLAP)
- UNSIGNALIZED MOVEMENT
- PEDESTRIAN MOVEMENT

TABLE OF OPERATION

SIGNAL FACE	PHASE Ø2+6	Ø3+8	Ø4+8	FLASH
21	~~F Y~~	~~R~~	~~R~~	~~Y~~
22,23	G	R	R	Y
31	~~R~~	←	~~F Y~~	~~R~~
41	~~R~~	~~F Y~~	~~F Y~~	~~R~~
42,43	R	R	G	R
61	~~F Y~~	~~R~~	~~R~~	~~Y~~
62,63	G	R	R	Y
81,82	R	G	G	R
P21,P22	W	DW	DW	DRK
P41,P42	DW	DW	W	DRK
P61,P62	W	DW	DW	DRK
P81,P82	DW	W	W	DRK

2033 SOFTWARE w/ 2070 CONTROLLER
LOOP & DETECTOR UNIT INSTALLATION CHART

INDUCTIVE LOOPS						DETECTOR PROGRAMMING														
							TIMING		ATTRIBUTES										STATUS	
									1	2	3	4	5	6	7	8				
LOOP NO.	SIZE (ft)	TURNS	DIST. FROM STOPBAR (ft)	NEW	EXISTING	NEMA PHASE	DELAY	CARRY (STRETCH)	FULL TIME DET. & PEDESTRIAN CALL	PEDESTRIAN CALL	RESERVED	COUNT	EXTENSION	TYPE 3	CALLING	ALTERNATE	SYSTEM LOOPS	NEW	EXISTING
2A	6x6	✳	70	✳	-	2	- SEC.	- SEC.	-	-	-	-	X	-	X	-	-	-	✳
2B	6x40	✳	0	✳	-	2	- SEC.	- SEC.	-	-	-	-	X	-	X	-	-	-	✳
3A	6x40	✳	0	✳	-	3	15 SEC.	- SEC.	-	-	-	-	X	-	X	-	-	-	✳
						8	3 SEC.	- SEC.	-	-	-	-	X	-	X	-	-	-	✳
4A	6x40	✳	0	✳	-	4	3 SEC.	- SEC.	-	-	-	-	X	-	X	-	-	-	✳
4B	6x40	✳	0	✳	-	4	10 SEC.	- SEC.	-	-	-	-	X	-	X	-	-	-	✳
6A	6x6	✳	70	✳	-	6	- SEC.	- SEC.	-	-	-	-	X	-	X	-	-	-	✳
6B	6x40	✳	0	✳	-	6	- SEC.	- SEC.	-	-	-	-	X	-	X	-	-	-	✳
8A	6x40	✳	0	✳	-	8	10 SEC.	- SEC.	-	-	-	-	X	-	X	-	-	-	✳
PEDESTRIAN DETECTION																				
P21,P22	N/A	N/A	N/A	-	X	2	- SEC.	- SEC.	-	X	-	-	-	-	-	-	-	-	X
P41,P42	N/A	N/A	N/A	-	X	4	- SEC.	- SEC.	-	X	-	-	-	-	-	-	-	-	X
P61,P62	N/A	N/A	N/A	X	-	6	- SEC.	- SEC.	-	X	-	-	-	-	-	-	X	-	-
P81,P82	N/A	N/A	N/A	-	X	8	- SEC.	- SEC.	-	X	-	-	-	-	-	-	-	-	X

✳ Video Detection Zone

SIGNAL FACE I.D.

All Heads L.E.D.

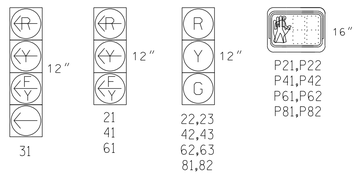

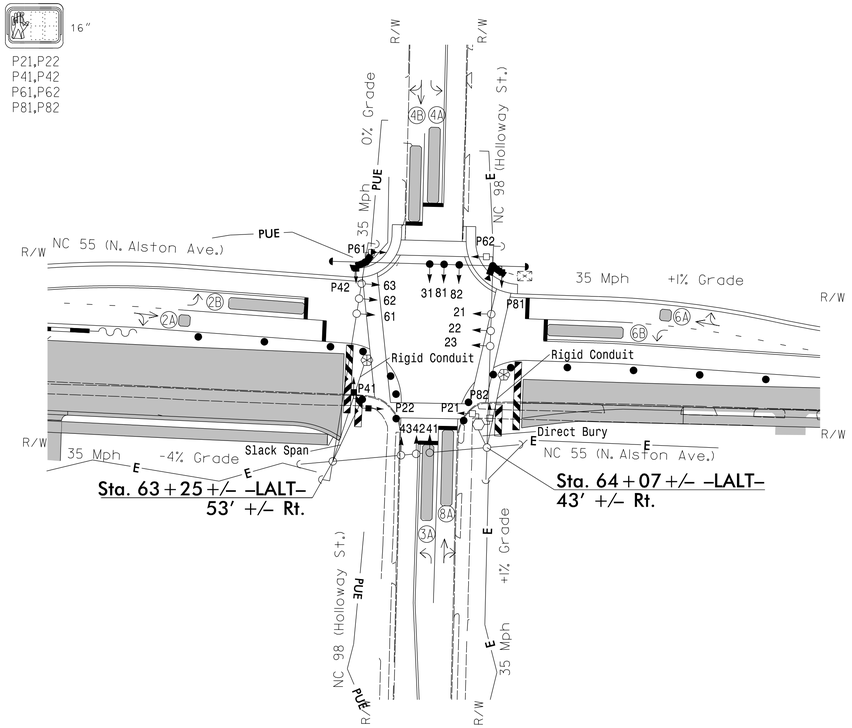

TIMING CHART
2033 SOFTWARE w/2070 CONTROLLER

PHASE	Ø2	Ø3	Ø4	Ø6	Ø8	OL1	OL3	OL4
MINIMUM INITIAL *	10 SEC.	7 SEC.	7 SEC.	10 SEC.	7 SEC.	0 SEC.	0 SEC.	0 SEC.
VEHICLE EXTENSION *	3.0 SEC.	2.0 SEC.	2.0 SEC.	3.0 SEC.	2.0 SEC.			
YELLOW CHANGE INT.	4.1 SEC.	3.8 SEC.	3.8 SEC.	4.1 SEC.	3.8 SEC.	4.1 SEC.	4.1 SEC.	3.8 SEC.
RED CLEARANCE	2.3 SEC.	3.1 SEC.	2.3 SEC.	2.3 SEC.	2.3 SEC.	2.3 SEC.	2.3 SEC.	2.3 SEC.
MAXIMUM LIMIT *	50 SEC.	15 SEC.	35 SEC.	50 SEC.	35 SEC.			
RECALL POSITION	VEH. RECALL	NONE	NONE	VEH. RECALL	NONE			
VEHICLE CALL MEMORY	YELLOW LOCK	NONE	NONE	YELLOW LOCK	NONE			
DOUBLE ENTRY	OFF	OFF	ON	OFF	ON			
WALK *	4 SEC.	- SEC.	4 SEC.	4 SEC.	4 SEC.			
FLASHING DON'T WALK	9 SEC.	- SEC.	10 SEC.	8 SEC.	11 SEC.			
TYPE 3 LIMIT	- SEC.	- SEC.	- SEC.	- SEC.	- SEC.			
ALTERNATE EXTENSION	- SEC.	- SEC.	- SEC.	- SEC.	- SEC.			
ADD PER VEHICLE *	- SEC.	- SEC.	- SEC.	- SEC.	- SEC.			
MAXIMUM INITIAL *	- SEC.	- SEC.	- SEC.	- SEC.	- SEC.			
MAXIMUM GAP*	3.0 SEC.	2.0 SEC.	2.0 SEC.	3.0 SEC.	2.0 SEC.			
REDUCE 0.1 SEC EVERY *	- SEC.	- SEC.	- SEC.	- SEC.	- SEC.			
MINIMUM GAP	3.0 SEC.	2.0 SEC.	2.0 SEC.	3.0 SEC.	2.0 SEC.			

* These values may be field adjusted. Do not adjust Min Green and Extension times for phases 2 and 6 lower than what is shown. Min Green for all other phases should not be lower than 4 seconds.

3 Phase
Fully Actuated
(Durham Signal System)

NOTES

1. Refer to "Road Standard Drawings NCDOT" dated January 2012, "Standard Specifications for Roads and Structures" dated January 2012.
2. Do not program signal for late night flashing operation unless otherwise directed by the Engineer.
3. Phase 3 may be lagged.
4. Set all detector units to presence mode.
5. Program all timing information into phase banks 1,2, and 3 unless otherwise noted.
6. Set phase bank 3 maximum limit to 250 seconds for phases used.
7. Omit "WALK" and flashing "DON'T WALK" with no pedestrian calls.
8. Program pedestrian heads to countdown the flashing "Don't Walk" time.
9. Maximum times shown in timing chart are for free-run operation only. Coordinated signal system timing values supersede these values.
10. Pedestrian pedestals are conceptual and shown for reference only. See sheets P1-P3 for pushbutton location details.
11. Contractor shall adjust video detection zones as required.

LEGEND

PROPOSED		EXISTING
○→	Traffic Signal Head	●→
◐→	Modified Signal Head	N/A
⊣	Sign	⊣
▯↓	Pedestrian Signal Head With Push Button & Sign	■↓
○—	Signal Pole with Guy	●—
○,	Signal Pole with Sidewalk Guy	●,
▭	Inductive Loop Detector	▭
⊠	Controller & Cabinet	⊠
□	Junction Box	■
-·-·-·-	2-in Underground Conduit	-·-·-·-
N/A	Right of Way	— — — —
→	Directional Arrow	→
⬡	Type II Signal Pedestal	⬢
▭	Work Area	N/A
●	Drums	N/A
E	Construction Easement	N/A
PDE	Permanent Utility Easement	N/A
———	Rigid Conduit	----------
———	Direct Bury	----------
▭◁	Video Detector	▬◀
▭	Video Detection Area	▭
⊛	Type I Pushbutton Post	✤

Signal Upgrade - Temporary Design 2 (TMP Phase 1, Steps 11-21)

SEPI ENGINEERING & CONSTRUCTION
1025 Wade Avenue
Raleigh, NC 27605
Tel:919-789-9977
Fax:919-789-9591
License #: C-2197

Prepared for the Offices of:
Transportation Mobility and Safety Division
Signal Design Section
750 N.Greenfield Pkwy.Garner,NC 27529

NC 55 (North Alston Avenue)
at
US 70 - NC 98 (Holloway Street)
Division 5 Durham County Durham

PLAN DATE: September 2014 REVIEWED BY: J Hochanadel
PREPARED BY: C Lawson REVIEWED BY:

SCALE 0 40 1"=40'

REVISIONS	INIT.	DATE

SEAL
NORTH CAROLINA PROFESSIONAL SEAL 28430 ENGINEER JEFFREY P. HOCHANADEL

DocuSigned by: 4/02/15
5D781D2BF8DC498...
DATE

SIG. INVENTORY NO. 05-1027T2

3/20/2015
G:\Traffic\Transportation\TIP\R13.017.00 NCDOT 2012 Traffic LSA\TIP\R13.017.03 (U-3308 Signals\Traffic\Signals\Design\Signals\TEMP SIGNALS WITH VIDEO\05-1027T2\05-1027T2.dgn
hpark

PROJECT REFERENCE NO.	SHEET NO.
U-3308	Sig.41.1

EDI MODEL 2018ECL-NC CONFLICT MONITOR PROGRAMMING DETAIL

(remove jumpers and set switches as shown)

REMOVE DIODE JUMPERS 2-6, 2-9, 2-11, 2-13, 2-15, 3-8, 3-10, 3-12, 3-16, 4-8, 4-10, 4-12, 4-14, 4-16, 6-9, 6-11, 6-13, 6-15, 8-10, 8-12, 8-14, 8-16, 9-11, 9-13, 9-15, 10-12, 10-14, 10-16, 11-13, 11-15, 12-14, 12-16, 13-15 and 14-16.

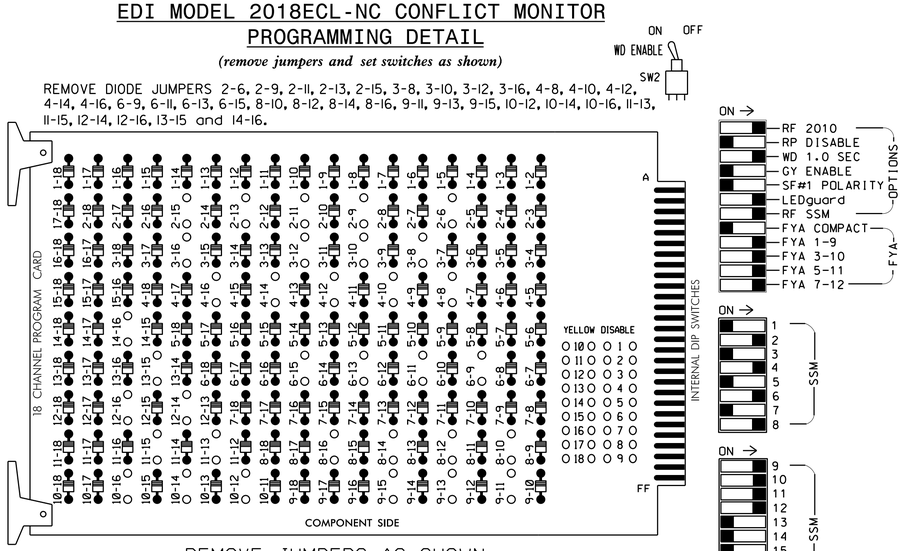

REMOVE JUMPERS AS SHOWN

■ = DENOTES POSITION OF SWITCH

NOTES:

1. Card is provided with all diode jumpers in place. Removal of any jumper allows its channels to run concurrently.
2. Ensure jumpers SEL2-SEL5 and SEL9 are present on the monitor board.
3. Ensure that Red Enable is active at all times during normal operation.
4. Connect serial cable from conflict monitor to comm. port 1 of 2070 controller. Ensure conflict monitor communicates with 2070.

NOTES

1. To prevent "flash-conflict" problems, insert red flash program blocks for all unused vehicle load switches in the output file. Verify that signal heads flash in accordance with the signal plans.
2. Program controller to Start Up in phases 2 and 6 green.
3. Set power-up flash time to 0 seconds within the controller programming. The conflict monitor will govern startup flash. Ensure STARTUP "RED START" is set to 0 seconds.
4. Enable Simultaneous Gap-Out feature for all phases.
5. Program all timing information into phase banks 1, 2, and 3 unless otherwise noted.
6. Set phase bank 3 maximum limit to 250 seconds for phases used.
7. Program phases 4 and 8 for Double Entry.
8. Ensure start up flash phases are coordinated with flash program block assignments.
9. Program Startup Ped Calls for phases 2, 4, 6, and 8.
10. Set the Red Revert interval on the controller to 1 second.
11. This cabinet and controller are part of the Durham Signal System.

EQUIPMENT INFORMATION

CONTROLLER.....2070E
CABINET.....332 W/ AUX
SOFTWARE.....McCAIN 2033
CABINET MOUNT.....BASE
OUTPUT FILE POSITIONS...18 WITH AUX FILE
LOAD SWITCHES USED.....S2,S3,S4,S5,S6,S8,S9,S11,S12, AUX S1,AUX S2,AUX S4,AUX S5
PHASES USED.....2,3,4,6,8,2 PED,4 PED,6 PED,8 PED
OVERLAP 1.....2
OVERLAP 2.....*
OVERLAP 3.....6
OVERLAP 4.....8

* See FYA PPLT Programming Detail on Sheet 2.

SIGNAL HEAD HOOK-UP CHART

LOAD SWITCH NO.	S1	S2	S3	S4	S5	S6	S7	S8	S9	S10	S11	S12	AUX S1	AUX S2	AUX S3	AUX S4	AUX S5	AUX S6
CMU CHANNEL NO.	1	2	13	3	4	14	5	6	15	7	8	16	9	10	17	11	12	18
PHASE	1	2	2 PED	3	4	4 PED	5	6	6 PED	7	8	8 PED	OL1	OL2	SPARE	OL3	OL4	SPARE
SIGNAL HEAD NO.	NU	22,23	P21, P22	31 ★	42,43	P41, P42	NU	62,63	P61, P62	NU	81,82	P81, P82	61 ★	31 ★	NU	21 ★	41 ★	NU
RED		128			101			134			107							
YELLOW		129		*	102			135			108							
GREEN		130			103			136			109							
RED ARROW													A121	A124		A114	A101	
YELLOW ARROW													A122	A125		A115	A102	
FLASHING YELLOW ARROW													A123	A126		A116	A103	
GREEN ARROW				118														
✋			113			104			119			110						
🚶			115			106			121			112						

NU = Not Used

* Denotes install load resistor. See load resistor installation detail this sheet.

★ See pictorial of head wiring in detail below.

4 SECTION FYA PPLT SIGNAL WIRING DETAIL

(wire signal heads as shown)

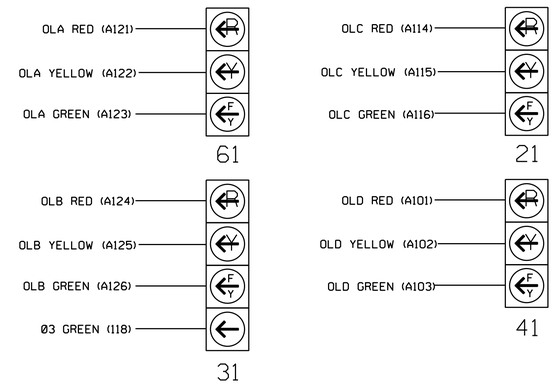

INPUT FILE POSITION LAYOUT

(front view)

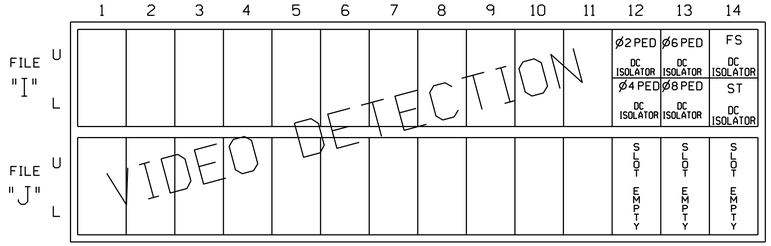

EX.: 1A, 2A, ETC. = LOOP NO.'S

FS = FLASH SENSE
ST = STOP TIME

INPUT FILE CONNECTION & PROGRAMMING CHART

LOOP NO.	LOOP TERMINAL	INPUT FILE POS.	DETECTOR NO.	PIN NO.	ATTRIBUTES	NEMA PHASE
PED PUSH BUTTONS						
P21,P22	TB8-4,6	I12U	25	67	2	2 PED
P41,P42	TB8-5,6	I12L	27	69	2	4 PED
P61,P62	TB8-7,9	I13U	26	68	2	6 PED
P81,P82	TB8-8,9	I13L	28	70	2	8 PED

INPUT FILE POSITION LEGEND: J2L
- FILE J
- SLOT 2
- LOWER

DETECTOR ATTRIBUTES LEGEND:
1-FULL TIME DELAY
2-PED CALL
3-RESERVED
4-COUNTING
5-EXTENSION
6-TYPE 3
7-CALLING
8-ALTERNATE

LOAD RESISTOR INSTALLATION DETAIL

(install resistors as shown below)

ACCEPTABLE VALUES	
VALUE (ohms)	WATTAGE
1.5K - 1.9K	25W (min)
2.0K - 3.0K	10W (min)

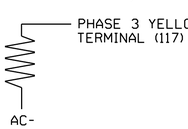

SPECIAL DETECTOR NOTE

Install a video detection system for vehicle detection. Perform installation according to manufacturer's directions and NCDOT engineer-approved mounting locations to accomplish the detection schemes shown on the Signal Design Plans.

THIS ELECTRICAL DETAIL IS FOR
THE SIGNAL DESIGN: 05-1027T2
DESIGNED: September 2014
SEALED: 4-02-15
REVISED: N/A

Electrcial Detail - Sheet 1 of 2

ELECTRICAL AND PROGRAMMING DETAILS FOR:

Prepared in the Offices of:
Transportation Mobility and Safety Division
North Carolina Department of Transportation
Signals Management Section
750 N.Greenfield Pkwy.Garner,NC 27529

NC 55 (North Alston Avenue) at US 70 - NC 98 (Holloway Street)

Division 5 | Durham County | DS | Durham

PLAN DATE: November 2014 | REVIEWED BY: JTR

PREPARED BY: James Peterson | REVIEWED BY:

REVISIONS	INIT.	DATE

SEAL
NORTH CAROLINA PROFESSIONAL SEAL 008453 ENGINEER JOHN T. ROWE, JR.
DocuSigned by: John T. Rowe, Jr. 4/2/2015
641D60C145EE4F5... DATE

SIG. INVENTORY NO. 05-1027T2

31-MAR-2015 14:53
S:\TITLES\PLANS\Backgrounds\Sig Mon\Peterson\05027_sm.ele_20150106.dgn
jpeterson

PROJECT REFERENCE NO.	SHEET NO.
U-3308	Sig.41.2

OVERLAPS [1-4] PROGRAMMING DETAIL

Program overlaps as follows:
Main Menu - 4) OVERLAP

```
OVERLAP [1]:
                LOADSWITCH = 9        NOTE:  FOR SIGNAL HEAD 61
                VEH SET 1  = 2
          YELLOW CLEARANCE = 4.1
             RED CLEARANCE = 2.3

PRESS '+' TWICE

OVERLAP [3]:
                LOADSWITCH = 11       NOTE:  FOR SIGNAL HEAD 21
                VEH SET 1  = 6
          YELLOW CLEARANCE = 4.1
             RED CLEARANCE = 2.3

PRESS '+'

OVERLAP [4]:
                LOADSWITCH = 12       NOTE:  FOR SIGNAL HEAD 41
                VEH SET 1  = 8
          YELLOW CLEARANCE = 3.8
             RED CLEARANCE = 2.3

      END OF OVERLAP PROGRAMMING
```

FYA PPLT PROGRAMMING

1. Program Flashing Yellow Arrow phases as follows:
   Main Menu - 1) PHASE - 2) PHASE FUNCTIONS PAGE TWO
   PPLT FYA = PHASE 3

2. Assign output pin for Flashing Yellow Arrow as follows:
   Main Menu - 6) OUTPUTS - F) FYA PPLT
   Phase 3 = 96

3. Redirect RED and YELLOW outputs for the left turn phases as follows:
   Main Menu - 6) OUTPUTS - 8) REDIRECT PHASE
   Phase 3 RED = 94, Phase 3 YELLOW = 95

COUNTDOWN PEDESTRIAN SIGNAL OPERATION

Countdown Ped Signals are required to display timing only during Ped Clearance Interval. Consult Ped Signal Module user's manual for instructions on selecting this feature.

FLASHER CIRCUIT MODIFICATION DETAIL

IN ORDER TO INSURE THAT SIGNALS FLASH CONCURRENTLY ON THE SAME APPROACH, MAKE THE FOLLOWING FLASHER CIRCUIT CHANGES:

1. ON REAR OF PDA - REMOVE WIRE FROM TERM. T2-4 AND TERMINATE ON T2-2.
2. ON REAR OF PDA - REMOVE WIRE FROM TERM. T2-5 AND TERMINATE ON T2-3.
3. REMOVE FLASHER UNIT 2.

THE CHANGES LISTED ABOVE TIES ALL PHASES AND OVERLAPS TO FLASHER UNIT 1.

THIS ELECTRICAL DETAIL IS FOR
THE SIGNAL DESIGN: 05-1027T2
DESIGNED: September 2014
SEALED: 4-02-15
REVISED: N/A

OVERLAP GREEN FLASH PROGRAMMING FOR 3 SECTION FYA

The following will cause the overlap green outputs to flash, which are wired to the flashing yellow arrow. Program as follows:

Main Menu - 1) PHASE - 2) PHASE FUNCTIONS PAGE TWO
OLAP G FL = 1, 3, 4

Electrcial Detail - Sheet 2 of 2

ELECTRICAL AND PROGRAMMING DETAILS FOR:

Prepared in the Offices of:
Transportation Mobility and Safety Division
STATE OF NORTH CAROLINA
DEPARTMENT OF TRANSPORTATION
Signals Management Section
750 N.Greenfield Pkwy,Garner,NC 27529

NC 55 (North Alston Avenue)
at
US 70 - NC 98 (Holloway Street)

Division 5 Durham County DS Durham

PLAN DATE: November 2014	REVIEWED BY: JTR		
PREPARED BY: James Peterson	REVIEWED BY:		
REVISIONS		INIT.	DATE

SEAL
NORTH CAROLINA PROFESSIONAL SEAL 008453 ENGINEER JOHN T. ROWE, JR

DocuSigned by: John T. Rowe, Jr. 4/2/2015
641D60C145EE4F5... DATE

SIG. INVENTORY NO. 05-1027T2

31-MAR-2015 14:54
S:*ITS&SU*ITS Signals*Workgroups*Sig Man*Peterson*051027_sm_ele_20150106.dgn
jtpeterson

DocuSign Envelope ID: 2B82073C-8CA6-44D2-96FA-5BE27AB92A1C

PROJECT REFERENCE NO.	SHEET NO.
U-3308	Sig. 42.0

2 Phase Fully Actuated (Durham Signal System)

PHASING DIAGRAM

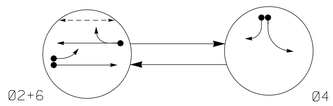

PHASING DIAGRAM DETECTION LEGEND

- DETECTED MOVEMENT
- UNDETECTED MOVEMENT (OVERLAP)
- UNSIGNALIZED MOVEMENT
- PEDESTRIAN MOVEMENT

TABLE OF OPERATION

SIGNAL FACE	PHASE Ø2+6	PHASE Ø4	FLASH
21	~~F~~	~~R~~	~~Y~~
22,23	G	R	Y
42,43	R	G	R
62,63	G	R	Y
P61,P62	W	DW	DRK

2033 SOFTWARE w/ 2070 CONTROLLER LOOP & DETECTOR UNIT INSTALLATION CHART

INDUCTIVE LOOPS						DETECTOR PROGRAMMING															
							TIMING		ATTRIBUTES										STATUS		
LOOP NO.	SIZE (ft)	TURNS	DIST. FROM STOPBAR (ft)	NEW	EXISTING	NEMA PHASE	DELAY	CARRY (STRETCH)	1 FULL TIME DET.	2 PEDESTRIAN CALL	3 RESERVED	4 COUNT	5 EXTENSION	6 TYPE 3	7 CALLING	8 ALTERNATE	SYSTEM LOOPS	NEW	EXISTING
2A	6x6	✳	70	✳	-	2	- SEC.	- SEC.	-	-	-	-	X	-	X	-	-	-	✳
2B	6x40	✳	0	✳	-	2	- SEC.	- SEC.	-	-	-	-	X	-	X	-	-	-	✳
4A	6x40	✳	0	-	✳	4	3 SEC.	- SEC.	-	-	-	-	X	-	X	-	-	-	✳
4B	6x40	✳	0	-	✳	4	10 SEC.	- SEC.	-	-	-	-	X	-	X	-	-	-	✳
6A	6x6	✳	70	-	✳	6	- SEC.	- SEC.	-	-	-	-	X	-	X	-	-	-	✳
PEDESTRIAN DETECTION																			
P61,P62	N/A	N/A	N/A	-	X	6	- SEC.	- SEC.	-	X	-	-	-	-	-	-	-	-	X

✳ Video Detection Zone

NOTES

1. Refer to "Road Standard Drawings NCDOT" dated January 2012, "Standard Specifications for Roads and Structures" dated January 2012.
2. Do not program signal for late night flashing operation unless otherwise directed by the Engineer.
3. Set all detector units to presence mode.
4. Program all timing information into phase banks 1,2, and 3 unless otherwise noted.
5. Set phase bank 3 maximum limit to 250 seconds for phases used.
6. Omit "WALK" and flashing "DON'T WALK" with no pedestrian calls.
7. Program pedestrian heads to countdown the flashing "Don't Walk" time.
8. Maximum times shown in timing chart are for free-run operation only. Coordinated signal system timing values supersede these values.
9. Disconnect and bag signal heads #31, #41, #61, #81, #82 and pedestrian signal heads #P21, #P22, #P41, #P42, #P81 and #P82 during this phase of construction.
10. Contractor shall adjust video detection zones as required.

SIGNAL FACE I.D.

All Heads L.E.D.
✳ See Note 9

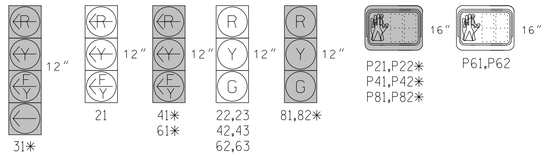

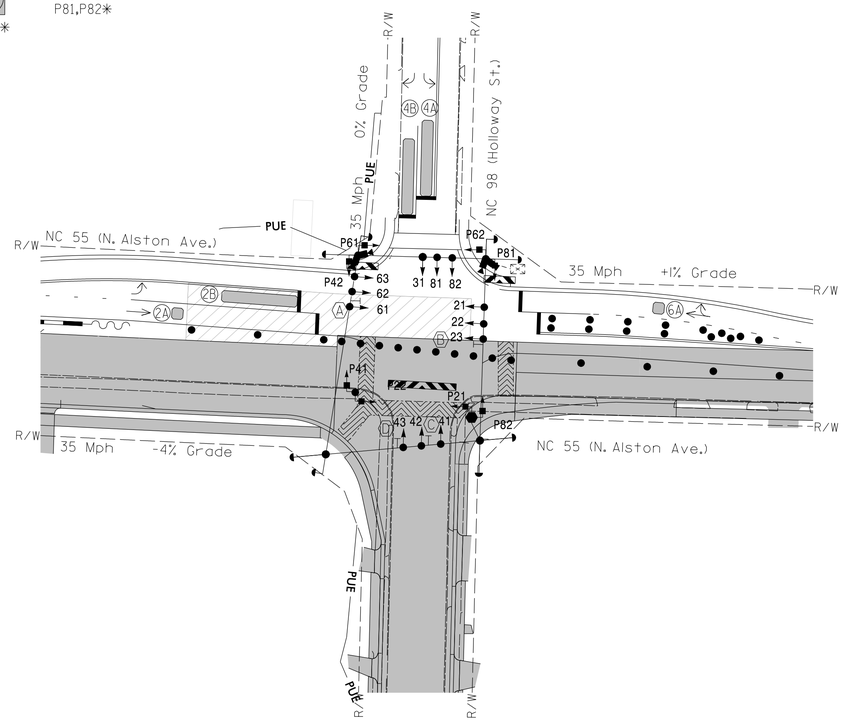

LEGEND

PROPOSED		EXISTING
○→	Traffic Signal Head	●→
◐→	Modified Signal Head	N/A
⊣	Sign	⊣
□↓	Pedestrian Signal Head With Push Button & Sign	■↓
○	Signal Pole with Guy	●
○,	Signal Pole with Sidewalk Guy	●,
▭	Inductive Loop Detector	▭
⊠	Controller & Cabinet	⊡
□	Junction Box	■
-·-·-	2-in Underground Conduit	-·-·-
N/A	Right of Way	------
→	Directional Arrow	→
Ⓐ	"No Left Turn" (R3-2)	Ⓐ
Ⓑ	"No Right Turn" (R3-1)	Ⓑ
Ⓒ	Left Arrow "ONLY" Sign (R3-5L)	Ⓒ
Ⓓ	Right Arrow "ONLY" Sign (R3-5R)	Ⓓ
▭	Work Area	N/A
●	Drums	N/A
	Construction Easement	N/A
PDE	Permanent Drainage Easement	N/A
▨	Barricades	N/A
	Direct Bury	----------
⬡	Type II Signal Pedestal	⬢
▭◁	Video Detector	▮◀
▭	Video Detection Area	▭

TIMING CHART
2033 SOFTWARE w/2070 CONTROLLER

PHASE	Ø2	Ø4	Ø6	OL3
MINIMUM INITIAL *	10 SEC.	7 SEC.	10 SEC.	0 SEC.
VEHICLE EXTENSION *	3.0 SEC.	2.0 SEC.	3.0 SEC.	
YELLOW CHANGE INT.	4.1 SEC.	3.0 SEC.	4.1 SEC.	4.1 SEC.
RED CLEARANCE	2.1 SEC.	2.3 SEC.	2.1 SEC.	2.1 SEC.
MAXIMUM LIMIT *	50 SEC.	35 SEC.	50 SEC.	
RECALL POSITION	VEH. RECALL	NONE	VEH. RECALL	
VEHICLE CALL MEMORY	YELLOW LOCK	NONE	YELLOW LOCK	
DOUBLE ENTRY	OFF	OFF	OFF	
WALK *	- SEC.	- SEC.	4 SEC.	
FLASHING DON'T WALK	- SEC.	- SEC.	8 SEC.	
TYPE 3 LIMIT	- SEC.	- SEC.	- SEC.	
ALTERNATE EXTENSION	- SEC.	- SEC.	- SEC.	
ADD PER VEHICLE *	- SEC.	- SEC.	- SEC.	
MAXIMUM INITIAL *	- SEC.	- SEC.	- SEC.	
MAXIMUM GAP*	3.0 SEC.	2.0 SEC.	3.0 SEC.	
REDUCE 0.1 SEC EVERY *	- SEC.	- SEC.	- SEC.	
MINIMUM GAP	3.0 SEC.	2.0 SEC.	3.0 SEC.	

* These values may be field adjusted. Do not adjust Min Green and Extension times for phases 2 and 6 lower than what is shown. Min Green for all other phases should not be lower than 4 seconds.

Signal Upgrade - Temporary Design 3 (TMP Phase 1, Steps 11-21)

Prepared for the Offices of:
Transportation Mobility and Safety Division
NORTH CAROLINA DEPARTMENT OF TRANSPORTATION
Signal Design Section
750 N.Greenfield Pkwy,Garner,NC 27529

NC 55 (North Alston Avenue) at US 70 - NC 98 (Holloway Street)
Division 5 Durham County Durham

PLAN DATE: September 2014 REVIEWED BY: J Hochanadel
PREPARED BY: C Lawson REVIEWED BY:

SCALE 0 40 1"=40'

REVISIONS	INIT.	DATE

SEAL
NORTH CAROLINA PROFESSIONAL SEAL 28430 ENGINEER JEFFREY P. HOCHANADEL

DocuSigned by: 4/02/15
50781D2BF86C498...
DATE

SIG. INVENTORY NO. 05-1027T3

SEPI ENGINEERING & CONSTRUCTION
1025 Wade Avenue
Raleigh, NC 27605
Tel:919-789-9977
Fax:919-789-9591
License #: C-2197

3/20/2015
C:\417DOT\Portation\TR13.017.00 NCDOT 2012 Traffic LSA\TR13.017.03 (U-3308 Signals)\Traffic\Signals\Design\Signals\TEMP SIGNALS WITH VIDEO\05-1027T3.dgn
clawson

PROJECT REFERENCE NO.	SHEET NO.
U-3308	Sig.42.1

EDI MODEL 2018ECL-NC CONFLICT MONITOR PROGRAMMING DETAIL

(remove jumpers and set switches as shown)

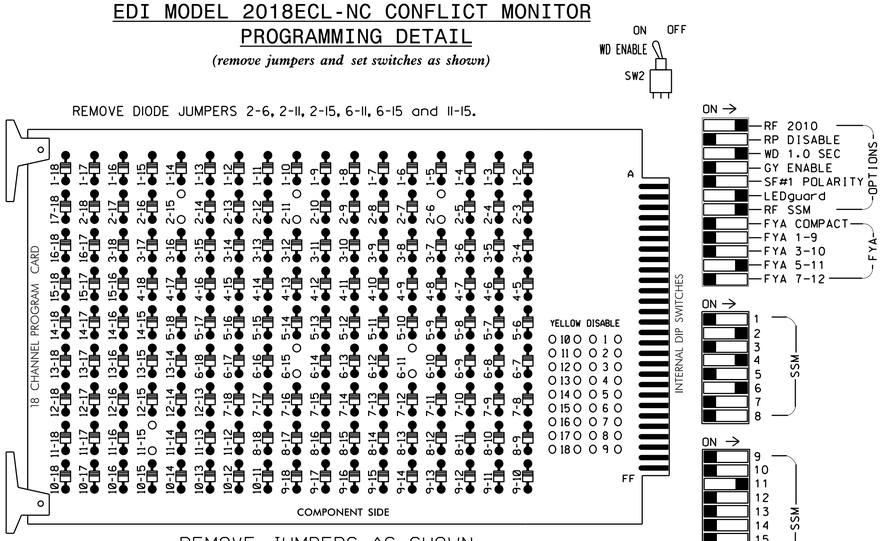

REMOVE JUMPERS AS SHOWN

■ = DENOTES POSITION OF SWITCH

NOTES:

1. Card is provided with all diode jumpers in place. Removal of any jumper allows its channels to run concurrently.
2. Ensure jumpers SEL2-SEL5 and SEL9 are present on the monitor board.
3. Ensure that Red Enable is active at all times during normal operation.
4. Connect serial cable from conflict monitor to comm. port 1 of 2070 controller. Ensure conflict monitor communicates with 2070.

NOTES

1. To prevent "flash-conflict" problems, insert red flash program blocks for all unused vehicle load switches in the output file. Verify that signal heads flash in accordance with the signal plans.
2. Program controller to Start Up in phases 2 and 6 green.
3. Set power-up flash time to 0 seconds within the controller programming. The conflict monitor will govern startup flash. Ensure STARTUP "RED START" is set to 0 seconds.
4. Enable Simultaneous Gap-Out feature for all phases.
5. Program all timing information into phase banks 1, 2, and 3 unless otherwise noted.
6. Set phase bank 3 maximum limit to 250 seconds for phases used.
7. Ensure start up flash phases are coordinated with flash program block assignments.
8. Program Startup Ped Calls for phase 6.
9. Set the Red Revert interval on the controller to 1 second.
10. This cabinet and controller are part of the Durham Signal System.

EQUIPMENT INFORMATION

CONTROLLER.....2070E
CABINET.....332 W/ AUX
SOFTWARE.....McCAIN 2033
CABINET MOUNT.....BASE
OUTPUT FILE POSITIONS...18 WITH AUX FILE
LOAD SWITCHES USED.....S2,S5,S8,S9,AUX S4
PHASES USED.....2,4,6,6 PED
OVERLAP 1.....NOT USED
OVERLAP 2.....NOT USED
OVERLAP 3.....6
OVERLAP 4.....NOT USED

SIGNAL HEAD HOOK-UP CHART

LOAD SWITCH NO.	S1	S2	S3	S4	S5	S6	S7	S8	S9	S10	S11	S12	AUX S1	AUX S2	AUX S3	AUX S4	AUX S5	AUX S6
CMU CHANNEL NO.	1	2	13	3	4	14	5	6	15	7	8	16	9	10	17	11	12	18
PHASE	1	2	2 PED	3	4	4 PED	5	6	6 PED	7	8	8 PED	OL1	OL2	SPARE	OL3	OL4	SPARE
SIGNAL HEAD NO.	NU	22,23	NU	NU	42,43	NU	NU	62,63	P61, P62	NU	NU	NU	NU	NU	NU	21★	NU	NU
RED		128			101			134										
YELLOW		129			102			135										
GREEN		130			103			136										
RED ARROW																A114		
YELLOW ARROW																A115		
FLASHING YELLOW ARROW																A116		
GREEN ARROW																		
✋									119									
🚶									121									

NU = Not Used

✱ Denotes install load resistor. See load resistor installation detail this sheet.

★ See pictorial of head wiring in detail below.

3 SECTION FYA PPLT SIGNAL WIRING DETAIL

(wire signal heads as shown)

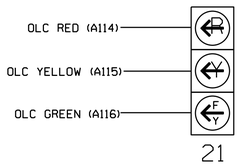

INPUT FILE POSITION LAYOUT

(front view)

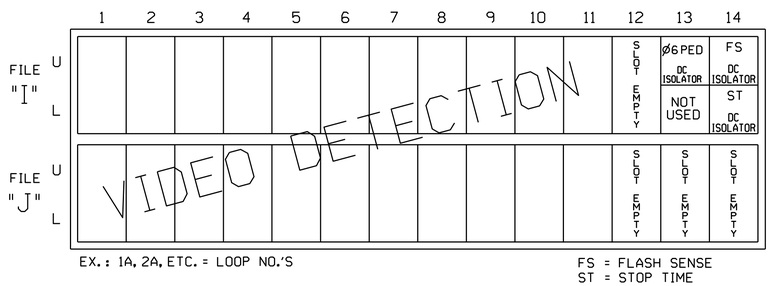

EX.: 1A, 2A, ETC. = LOOP NO.'S

FS = FLASH SENSE
ST = STOP TIME

INPUT FILE CONNECTION & PROGRAMMING CHART

LOOP NO.	LOOP TERMINAL	INPUT FILE POS.	DETECTOR NO.	PIN NO.	ATTRIBUTES	NEMA PHASE
PED PUSH BUTTONS						
P61,P62	TB8-7,9	I13U	26	68	2	6 PED

INPUT FILE POSITION LEGEND: J2L
FILE J
SLOT 2
LOWER

DETECTOR ATTRIBUTES LEGEND:
1-FULL TIME DELAY
2-PED CALL
3-RESERVED
4-COUNTING
5-EXTENSION
6-TYPE 3
7-CALLING
8-ALTERNATE

SPECIAL DETECTOR NOTE

Install a video detection system for vehicle detection. Perform installation according to manufacturer's directions and NCDOT engineer-approved mounting locations to accomplish the detection schemes shown on the Signal Design Plans.

OVERLAPS [3] PROGRAMMING DETAIL

Program overlaps as follows:
Main Menu - 4) OVERLAP

PRESS '+' TWO TIMES

OVERLAP [3]:
LOADSWITCH = 11 NOTE: FOR SIGNAL HEAD 21
VEH SET 1 = 6
YELLOW CLEARANCE = 4.1
RED CLEARANCE = 2.1

OVERLAP GREEN FLASH PROGRAMMING FOR 3 SECTION FYA

The following will cause the overlap green outputs to flash, which are wired to the flashing yellow arrow. Program as follows:

Main Menu - 1) PHASE - 2) PHASE FUNCTIONS PAGE TWO
OLAP G FL = 3

COUNTDOWN PEDESTRIAN SIGNAL OPERATION

Countdown Ped Signals are required to display timing only during Ped Clearance Interval. Consult Ped Signal Module user's manual for instructions on selecting this feature.

THIS ELECTRICAL DETAIL IS FOR
THE SIGNAL DESIGN: 05-1027T3
DESIGNED: September 2014
SEALED: 4-02-15
REVISED: N/A

Electrcial Detail

ELECTRICAL AND PROGRAMMING DETAILS FOR:

Prepared in the Offices of:
Transportation Mobility and Safety Division
NORTH CAROLINA DEPARTMENT OF TRANSPORTATION
Signals Management Section
750 N.Greenfield Pkwy,Garner,NC 27529

NC 55 (North Alston Avenue)
at
US 70 - NC 98 (Holloway Street)

Division 5 Durham County DS Durham
PLAN DATE: November 2014 REVIEWED BY: JTR
PREPARED BY: James Peterson REVIEWED BY:

REVISIONS	INIT.	DATE

SEAL
NORTH CAROLINA PROFESSIONAL SEAL 008453 ENGINEER JOHN T. ROWE, JR.
DocuSigned by: John T. Rowe, Jr. 4/2/2015
DATE
SIG. INVENTORY NO. 05-1027T3

31-MAR-2015 14:47
S:\MTS\SIGNALS\Workgroups\Sig Mgmt\Peterson\M51027_sm_ele_20150106.dgn
jtpeterson

DocuSign Envelope ID: 2B82073C-8CA6-44D2-96FA-5BE27AB92A1C

PROJECT REFERENCE NO.	SHEET NO.
U-3308	Sig. 43.0

PHASING DIAGRAM

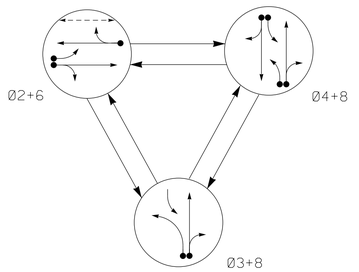

PHASING DIAGRAM DETECTION LEGEND

- DETECTED MOVEMENT
- UNDETECTED MOVEMENT (OVERLAP)
- UNSIGNALIZED MOVEMENT
- PEDESTRIAN MOVEMENT

TABLE OF OPERATION

SIGNAL FACE	PHASE Ø2+6	Ø3+8	Ø4+8	FLASH
21	F Y	R	R	Y
22,23	G	R	R	Y
31	R	F Y	R	R
41	R	F Y	F Y	R
42,43	R	R	G	R
61	F Y	R	R	Y
62,63	G	R	R	Y
81,82	R	G	G	R
P61,P62	W	DW	DW	DRK

SIGNAL FACE I.D.

All Heads L.E.D.
✳ See Note 10
✳✳ See Note 11

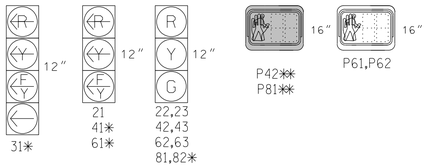

2033 SOFTWARE w/ 2070 CONTROLLER
LOOP & DETECTOR UNIT INSTALLATION CHART

INDUCTIVE LOOPS						DETECTOR PROGRAMMING														
							TIMING		ATTRIBUTES										STATUS	
LOOP NO.	SIZE (ft)	TURNS	DIST. FROM STOPBAR (ft)	NEW	EXISTING	NEMA PHASE	DELAY	CARRY (STRETCH)	1 FULL TIME DET.	2 PEDESTRIAN CALL	3 RESERVED	4 COUNT	5 EXTENSION	6 TYPE 3	7 CALLING	8 ALTERNATE	SYSTEM LOOPS	NEW	EXISTING
2A	6x6	✳	70	-	✳	2	- SEC.	- SEC.	-	-	-	-	X	-	X	-	-	-	✳
2B	6x40	✳	0	-	✳	2	- SEC.	- SEC.	-	-	-	-	X	-	X	-	-	-	✳
3A	6x40	✳	0	✳		3	15 SEC.	- SEC.	-	-	-	-	X	-	X	-	-	-	✳
						8	3 SEC.	- SEC.	-	-	-	-	X	-	X	-	-	-	✳
4A	6x40	✳	0	-	✳	4	3 SEC.	- SEC.	-	-	-	-	X	-	X	-	-	-	✳
4B	6x40	✳	0	-	✳	4	10 SEC.	- SEC.	-	-	-	-	X	-	X	-	-	-	✳
6A	6x6	✳	70	-	✳	6	- SEC.	- SEC.	-	-	-	-	X	-	X	-	-	-	✳
6B	6x40	✳	0	✳	-	6	- SEC.	- SEC.	-	-	-	-	X	-	X	-	-	-	✳
8A	6x40	✳	0	✳	-	8	10 SEC.	- SEC.	-	-	-	-	X	-	X	-	-	-	✳
PEDESTRIAN DETECTION																				
P61,P62	N/A	N/A	N/A	-	X	6	- SEC.	- SEC.	-	X	-	-	-	-	-	-	-	-	X

✳ Video Detection Zone

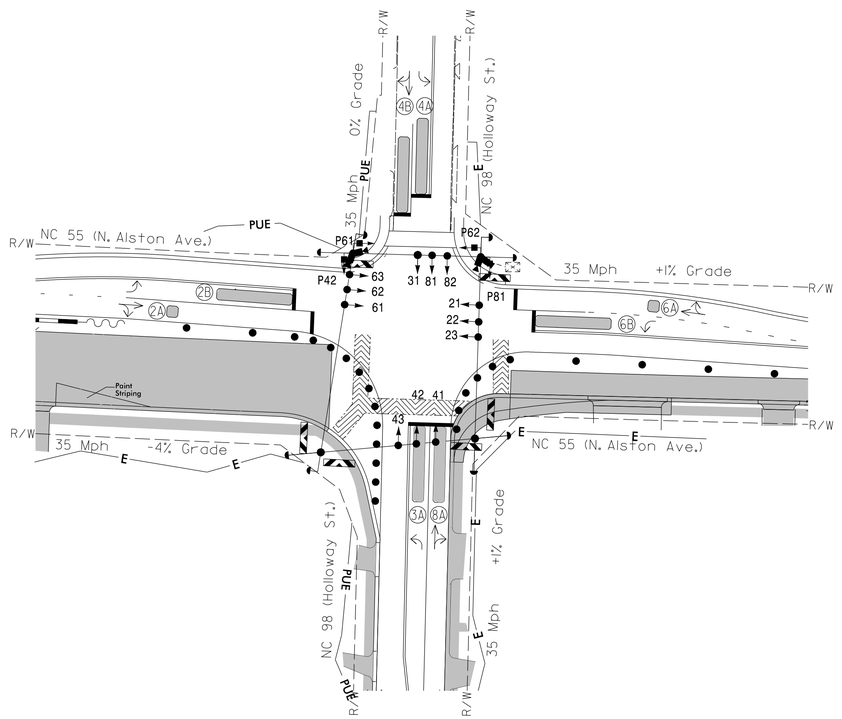

TIMING CHART
2033 SOFTWARE w/2070 CONTROLLER

PHASE	Ø2	Ø3	Ø4	Ø6	Ø8	OL1	OL3	OL4
MINIMUM INITIAL *	10 SEC.	7 SEC.	7 SEC.	10 SEC.	7 SEC.	0 SEC.	0 SEC.	0 SEC.
VEHICLE EXTENSION *	3.0 SEC.	2.0 SEC.	2.0 SEC.	3.0 SEC.	2.0 SEC.			
YELLOW CHANGE INT.	4.1 SEC.	3.8 SEC.	3.8 SEC.	4.1 SEC.	3.8 SEC.	4.1 SEC.	4.1 SEC.	3.8 SEC.
RED CLEARANCE	2.1 SEC.	2.4 SEC.	2.0 SEC.	2.1 SEC.	2.0 SEC.	2.1 SEC.	2.1 SEC.	2.0 SEC.
MAXIMUM LIMIT *	50 SEC.	15 SEC.	35 SEC.	50 SEC.	35 SEC.			
RECALL POSITION	VEH. RECALL	NONE	NONE	VEH. RECALL	NONE			
VEHICLE CALL MEMORY	YELLOW LOCK	NONE	NONE	YELLOW LOCK	NONE			
DOUBLE ENTRY	OFF	OFF	ON	OFF	ON			
WALK *	- SEC.	- SEC.	- SEC.	4 SEC.	- SEC.			
FLASHING DON'T WALK	- SEC.	- SEC.	- SEC.	8 SEC.	- SEC.			
TYPE 3 LIMIT	- SEC.	- SEC.	- SEC.	- SEC.	- SEC.			
ALTERNATE EXTENSION	- SEC.	- SEC.	- SEC.	- SEC.	- SEC.			
ADD PER VEHICLE *	- SEC.	- SEC.	- SEC.	- SEC.	- SEC.			
MAXIMUM INITIAL *	- SEC.	- SEC.	- SEC.	- SEC.	- SEC.			
MAXIMUM GAP*	3.0 SEC.	2.0 SEC.	2.0 SEC.	3.0 SEC.	2.0 SEC.			
REDUCE 0.1 SEC EVERY *	- SEC.	- SEC.	- SEC.	- SEC.	- SEC.			
MINIMUM GAP	3.0 SEC.	2.0 SEC.	2.0 SEC.	3.0 SEC.	2.0 SEC.			

* These values may be field adjusted. Do not adjust Min Green and Extension times for phases 2 and 6 lower than what is shown. Min Green for all other phases should not be lower than 4 seconds.

2 Phase
Fully Actuated
(Durham Signal System)

NOTES

1. Refer to "Road Standard Drawings NCDOT" dated January 2012, "Standard Specifications for Roads and Structures" dated January 2012.
2. Do not program signal for late night flashing operation unless otherwise directed by the Engineer.
3. Phase 3 may be lagged.
4. Set all detector units to presence mode.
5. Program all timing information into phase banks 1,2, and 3 unless otherwise noted.
6. Set phase bank 3 maximum limit to 250 seconds for phases used.
7. Omit "WALK" and flashing "DON'T WALK" with no pedestrian calls.
8. Program pedestrian heads to countdown the flashing "Don't Walk" time.
9. Maximum times shown in timing chart are for free-run operation only. Coordinated signal system timing values supersede these values.
10. Reconnect and unbag signal heads #31, #41, #61, #81, and #82.
11. Pedestrian signal heads #P42 and #P81 shall remain disconnected and bagged during this phase of construction.
12. Contractor shall adjust video detection zones as required.

LEGEND

PROPOSED		EXISTING
○→	Traffic Signal Head	●→
◐→	Modified Signal Head	N/A
⊣	Sign	⊣
□↓	Pedestrian Signal Head With Push Button & Sign	■↓
○	Signal Pole with Guy	●
○,	Signal Pole with Sidewalk Guy	●,
▭	Inductive Loop Detector	▭
⊠	Controller & Cabinet	⊠
□	Junction Box	■
-·-·-	2-in Underground Conduit	-·-·-
N/A	Right of Way	- - - -
→	Directional Arrow	→
Ⓐ	"No Left Turn" (R3-2)	Ⓐ
Ⓑ	"No Right Turn" (R3-1)	Ⓑ
Ⓒ	Left Arrow "ONLY" Sign (R3-5L)	Ⓒ
Ⓓ	Right Arrow "ONLY" Sign (R3-5R)	Ⓓ
▭	Work Area	N/A
●	Drums	N/A
E	Construction Easement	N/A
PDE	Permanent Drainage Easement	N/A
▨	Barricades	N/A
———	Direct Bury	- - - - -
⬡	Type II Signal Pedestal	⬢
▭◁	Video Detector	■◀
▭	Video Detection Area	▭

Signal Upgrade - Temporary Design 4 (TMP Phase 1, Steps 11-21)

SEPI ENGINEERING & CONSTRUCTION
1025 Wade Avenue
Raleigh, NC 27605
Tel:919-789-9977
Fax:919-789-9591
License #: C-2197

Prepared for the Offices of:
Transportation Mobility and Safety Division
NORTH CAROLINA DEPARTMENT OF TRANSPORTATION
Signal Design Section
750 N.Greenfield Pkwy,Garner,NC 27529

NC 55 (North Alston Avenue)
at
US 70 - NC 98 (Holloway Street)
Division 5 Durham County Durham

PLAN DATE: September 2014 REVIEWED BY: J Hochanadel
PREPARED BY: C Lawson REVIEWED BY:

SCALE 0 40 1"=40'

REVISIONS	INIT.	DATE

SEAL
NORTH CAROLINA PROFESSIONAL SEAL 28430 ENGINEER JEFFREY P. HOCHANADEL

DocuSigned by:
4/02/15
50781D2BF86C498...
DATE

SIG. INVENTORY NO. 05-1027T4

3/26/2015
C:\Project Information\TR13.017.00 NCDOT 2012 Traffic LSA\TR13.017.03 (U-3308 Signals)\Traffic\Signals\Design\Signals\TEMP SIGNALS WITH VIDEO\05-1027T4\05-1027T4.dgn
JHochanadel

PROJECT REFERENCE NO.	SHEET NO.
U-3308	Sig.43.1

EDI MODEL 2018ECL-NC CONFLICT MONITOR PROGRAMMING DETAIL

(remove jumpers and set switches as shown)

REMOVE DIODE JUMPERS 2-6, 2-9, 2-11, 2-15, 3-8, 3-10, 3-12, 4-8, 4-10, 4-12, 6-9, 6-11, 6-15, 8-10, 8-12, 9-11, 9-15, 10-12 and 11-15.

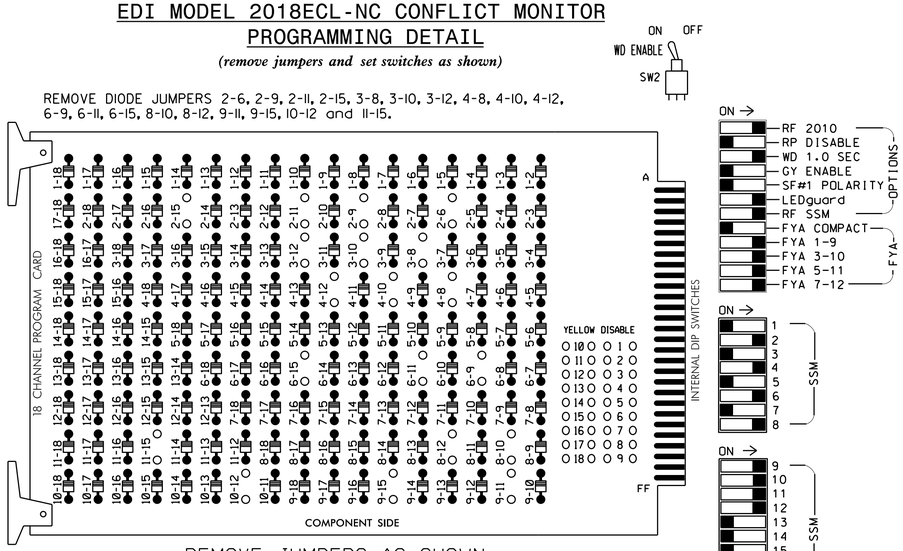

REMOVE JUMPERS AS SHOWN

■ = DENOTES POSITION OF SWITCH

NOTES:

1. Card is provided with all diode jumpers in place. Removal of any jumper allows its channels to run concurrently.
2. Ensure jumpers SEL2-SEL5 and SEL9 are present on the monitor board.
3. Ensure that Red Enable is active at all times during normal operation.
4. Connect serial cable from conflict monitor to comm. port 1 of 2070 controller. Ensure conflict monitor communicates with 2070.

NOTES

1. To prevent "flash-conflict" problems, insert red flash program blocks for all unused vehicle load switches in the output file. Verify that signal heads flash in accordance with the signal plans.
2. Program controller to Start Up in phases 2 and 6 green.
3. Set power-up flash time to 0 seconds within the controller programming. The conflict monitor will govern startup flash. Ensure STARTUP "RED START" is set to 0 seconds.
4. Enable Simultaneous Gap-Out feature for all phases.
5. Program all timing information into phase banks 1, 2, and 3 unless otherwise noted.
6. Set phase bank 3 maximum limit to 250 seconds for phases used.
7. Program phases 4 and 8 for Double Entry.
8. Ensure start up flash phases are coordinated with flash program block assignments.
9. Program Startup Ped Calls for phase 6.
10. Set the Red Revert interval on the controller to 1 second.
11. This cabinet and controller are part of the Durham Signal System.

EQUIPMENT INFORMATION

CONTROLLER.....2070E
CABINET.....332 W/ AUX
SOFTWARE.....McCAIN 2033
CABINET MOUNT.....BASE
OUTPUT FILE POSITIONS...18 WITH AUX FILE
LOAD SWITCHES USED.....S2,S4,S5,S8,S9,S11,AUX S1, AUX S2,AUX S4,AUX S5
PHASES USED.....2,3,4,6,8,6 PED
OVERLAP 1.....2
OVERLAP 2.....*
OVERLAP 3.....6
OVERLAP 4.....8

* See FYA PPLT Programming Detail on Sheet 2.

SIGNAL HEAD HOOK-UP CHART

LOAD SWITCH NO.	S1	S2	S3	S4	S5	S6	S7	S8	S9	S10	S11	S12	AUX S1	AUX S2	AUX S3	AUX S4	AUX S5	AUX S6
CMU CHANNEL NO.	1	2	13	3	4	14	5	6	15	7	8	16	9	10	17	11	12	18
PHASE	1	2	2 PED	3	4	4 PED	5	6	6 PED	7	8	8 PED	OL1	OL2	SPARE	OL3	OL4	SPARE
SIGNAL HEAD NO.	NU	22,23	NU	31★	42,43	NU	NU	62,63	P61, P62	NU	81,82	NU	61★	31★	NU	21★	41★	NU
RED		128			101			134			107							
YELLOW		129		*	102			135			108							
GREEN		130			103			136			109							
RED ARROW													A121	A124		A114	A101	
YELLOW ARROW													A122	A125		A115	A102	
FLASHING YELLOW ARROW													A123	A126		A116	A103	
GREEN ARROW				118														
✋									119									
🚶									121									

NU = Not Used

* Denotes install load resistor. See load resistor installation detail this sheet.

★ See pictorial of head wiring in detail below.

4 SECTION FYA PPLT SIGNAL WIRING DETAIL

(wire signal heads as shown)

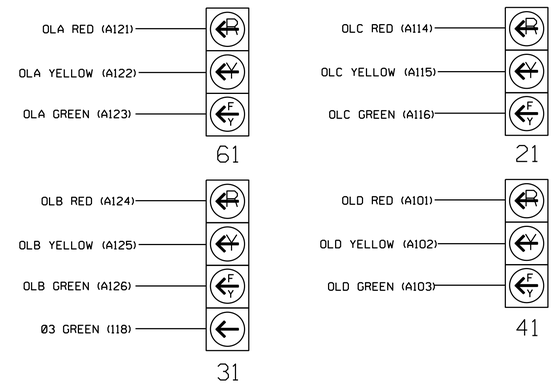

INPUT FILE POSITION LAYOUT

(front view)

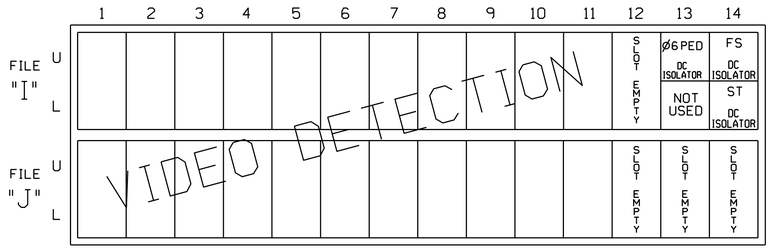

EX.: 1A, 2A, ETC. = LOOP NO.'S

FS = FLASH SENSE
ST = STOP TIME

INPUT FILE CONNECTION & PROGRAMMING CHART

LOOP NO.	LOOP TERMINAL	INPUT FILE POS.	DETECTOR NO.	PIN NO.	ATTRIBUTES	NEMA PHASE
PED PUSH BUTTONS						
P61,P62	TB8-7,9	I13U	26	68	2	6 PED

I13L

INPUT FILE POSITION LEGEND: J2L
FILE J
SLOT 2
LOWER

DETECTOR ATTRIBUTES LEGEND:
1-FULL TIME DELAY
2-PED CALL
3-RESERVED
4-COUNTING
5-EXTENSION
6-TYPE 3
7-CALLING
8-ALTERNATE

LOAD RESISTOR INSTALLATION DETAIL

(install resistors as shown below)

ACCEPTABLE VALUES	
VALUE (ohms)	WATTAGE
1.5K - 1.9K	25W (min)
2.0K - 3.0K	10W (min)

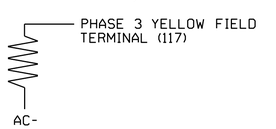

SPECIAL DETECTOR NOTE

Install a video detection system for vehicle detection. Perform installation according to manufacturer's directions and NCDOT engineer-approved mounting locations to accomplish the detection schemes shown on the Signal Design Plans.

THIS ELECTRICAL DETAIL IS FOR
THE SIGNAL DESIGN: 05-1027T4
DESIGNED: September 2014
SEALED: 4-02-15
REVISED: N/A

Electrcial Detail - Sheet 1 of 2

ELECTRICAL AND PROGRAMMING DETAILS FOR:

Prepared in the Offices of:
Transportation Mobility and Safety Division
NORTH CAROLINA DEPARTMENT OF TRANSPORTATION
Signals Management Section
750 N.Greenfield Pkwy.Garner,NC 27529

NC 55 (North Alston Avenue)
at
US 70 - NC 98 (Holloway Street)

Division 5 | Durham County | DS | Durham

PLAN DATE: November 2014 | REVIEWED BY: JTR

PREPARED BY: James Peterson | REVIEWED BY:

REVISIONS	INIT.	DATE

SEAL
NORTH CAROLINA PROFESSIONAL SEAL 008453 ENGINEER JOHN T. ROWE, JR.

DocuSigned by: John T. Rowe, Jr. 4/2/2015
641D60C145EE4F5...
DATE

SIG. INVENTORY NO. 05-1027T4

31-MAR-2015 14:44
S:\TITLES\PLANS\Backgrounds\Sig Mon\Peterson\05027_sm.ele_20150106.dgn
jpeterson

PROJECT REFERENCE NO.	SHEET NO.
U-3308	Sig.43.2

OVERLAPS [1-4] PROGRAMMING DETAIL

Program overlaps as follows:
Main Menu - 4) OVERLAP

```
OVERLAP [1]:
                LOADSWITCH = 9        NOTE:  FOR SIGNAL HEAD 61
                VEH SET 1  = 2
          YELLOW CLEARANCE = 4.1
             RED CLEARANCE = 2.1

PRESS '+' TWICE

OVERLAP [3]:
                LOADSWITCH = 11       NOTE:  FOR SIGNAL HEAD 21
                VEH SET 1  = 6
          YELLOW CLEARANCE = 4.1
             RED CLEARANCE = 2.1

PRESS '+'

OVERLAP [4]:
                LOADSWITCH = 12       NOTE:  FOR SIGNAL HEAD 41
                VEH SET 1  = 8
          YELLOW CLEARANCE = 3.8
             RED CLEARANCE = 2.0

      END OF OVERLAP PROGRAMMING
```

FYA PPLT PROGRAMMING

1. Program Flashing Yellow Arrow phases as follows:
   Main Menu - 1) PHASE - 2) PHASE FUNCTIONS PAGE TWO
   PPLT FYA = PHASE 3

2. Assign output pin for Flashing Yellow Arrow as follows:
   Main Menu - 6) OUTPUTS - F) FYA PPLT
   Phase 3 = 96

3. Redirect RED and YELLOW outputs for the left turn phases as follows:
   Main Menu - 6) OUTPUTS - 8) REDIRECT PHASE
   Phase 3 RED = 94, Phase 3 YELLOW = 95

COUNTDOWN PEDESTRIAN SIGNAL OPERATION

Countdown Ped Signals are required to display timing only during Ped Clearance Interval. Consult Ped Signal Module user's manual for instructions on selecting this feature.

FLASHER CIRCUIT MODIFICATION DETAIL

IN ORDER TO INSURE THAT SIGNALS FLASH CONCURRENTLY ON THE SAME APPROACH, MAKE THE FOLLOWING FLASHER CIRCUIT CHANGES:

1. ON REAR OF PDA - REMOVE WIRE FROM TERM. T2-4 AND TERMINATE ON T2-2.
2. ON REAR OF PDA - REMOVE WIRE FROM TERM. T2-5 AND TERMINATE ON T2-3.
3. REMOVE FLASHER UNIT 2.

THE CHANGES LISTED ABOVE TIES ALL PHASES AND OVERLAPS TO FLASHER UNIT 1.

THIS ELECTRICAL DETAIL IS FOR
THE SIGNAL DESIGN: 05-1027T4
DESIGNED: September 2014
SEALED: 4-02-15
REVISED: N/A

OVERLAP GREEN FLASH PROGRAMMING FOR 3 SECTION FYA

The following will cause the overlap green outputs to flash, which are wired to the flashing yellow arrow. Program as follows:

Main Menu - 1) PHASE - 2) PHASE FUNCTIONS PAGE TWO
OLAP G FL = 1, 3, 4

Electrcial Detail - Sheet 2 of 2

ELECTRICAL AND PROGRAMMING DETAILS FOR:

Prepared in the Offices of:
Transportation Mobility and Safety Division
STATE OF NORTH CAROLINA DEPARTMENT OF TRANSPORTATION
Signals Management Section
750 N.Greenfield Pkwy,Garner,NC 27529

NC 55 (North Alston Avenue)
at
US 70 - NC 98 (Holloway Street)

Division 5 Durham County DS Durham

PLAN DATE: November 2014	REVIEWED BY: JTR		
PREPARED BY: James Peterson	REVIEWED BY:		
REVISIONS		INIT.	DATE

SEAL
NORTH CAROLINA PROFESSIONAL SEAL 008453 ENGINEER JOHN T. ROWE, JR.

DocuSigned by: John T. Rowe, Jr. 4/2/2015
641D60C145EE4F5... DATE

SIG. INVENTORY NO. 05-1027T4

3-MAR-2015 14:46
S:*TS&SU*TS Signals*Workgroups*Sig Man*Peterson*051027_sm_ele_20150106.dgn
jtpeterson

DocuSign Envelope ID: 2B82073C-8CA6-44D2-96FA-5BE27AB92A1C

PROJECT REFERENCE NO.	SHEET NO.
U-3308	Sig. 44.0

PHASING DIAGRAM

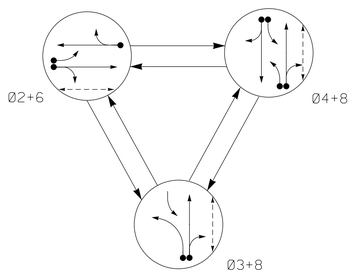

PHASING DIAGRAM DETECTION LEGEND

- DETECTED MOVEMENT
- UNDETECTED MOVEMENT (OVERLAP)
- UNSIGNALIZED MOVEMENT
- PEDESTRIAN MOVEMENT

TABLE OF OPERATION

SIGNAL FACE	PHASE Ø2+6	Ø3+8	Ø4+8	FLASH
21	~~FY~~	~~R~~	~~R~~	~~Y~~
22,23	G	R	R	Y
31	~~R~~	~~FY~~	~~FY~~	~~R~~
41	~~R~~	~~FY~~	~~FY~~	~~R~~
42,43	R	R	G	R
62,63	G	R	R	Y
81,82	R	G	G	R
P21,P22	W	DW	DW	DRK
P81,P82	DW	W	W	DRK

2033 SOFTWARE w/ 2070 CONTROLLER
LOOP & DETECTOR UNIT INSTALLATION CHART

INDUCTIVE LOOPS						DETECTOR PROGRAMMING														
							TIMING		ATTRIBUTES									STATUS	
LOOP NO.	SIZE (ft)	TURNS	DIST. FROM STOPBAR (ft)	NEW	EXISTING	NEMA PHASE	DELAY	CARRY (STRETCH)	1 FULL TIME DET.	2 PEDESTRIAN CALL	3 RESERVED	4 COUNT	5 EXTENSION	6 TYPE 3	7 CALLING	8 ALTERNATE	SYSTEM LOOPS	NEW	EXISTING
2A	6x6	✳	70	✳	-	2	- SEC.	- SEC.	-	-	-	-	X	-	X	-	-	-	✳
2B	6x40	✳	0	✳	-	2	- SEC.	- SEC.	-	-	-	-	X	-	X	-	-	-	✳
3A	6x40	✳	0	✳	-	3	15 SEC.	- SEC.	-	-	-	-	X	-	X	-	-	-	✳
						8	3 SEC.	- SEC.	-	-	-	-	X	-	X	-	-	-	✳
4A	6x40	✳	0	✳	-	4	3 SEC.	- SEC.	-	-	-	-	X	-	X	-	-	-	✳
4B	6x40	✳	0	✳	-	4	10 SEC.	- SEC.	-	-	-	-	X	-	X	-	-	-	✳
6A	6x6	✳	70	✳	-	6	- SEC.	- SEC.	-	-	-	-	X	-	X	-	-	-	✳
8A	6x40	✳	0	✳	-	8	10 SEC.	- SEC.	-	-	-	-	X	-	X	-	-	-	✳
PEDESTRIAN DETECTION																			
P21,P22	N/A	N/A	N/A	-	X	2	- SEC.	- SEC.	-	X	-	-	-	-	-	-	-	-	X
P81,P82	N/A	N/A	N/A	-	X	8	- SEC.	- SEC.	-	X	-	-	-	-	-	-	-	-	X

✳ Video Detection Zone

SIGNAL FACE I.D.

All Heads L.E.D.
✳ See Note 11
✳✳ See Note 12
See Note 13
See Note 14

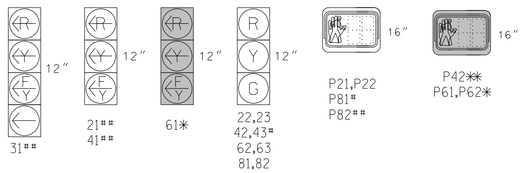

TIMING CHART
2033 SOFTWARE w/2070 CONTROLLER

PHASE	Ø2	Ø3	Ø4	Ø6	Ø8	OL3	OL4
MINIMUM INITIAL *	10 SEC.	7 SEC.	7 SEC.	10 SEC.	7 SEC.	0 SEC.	0 SEC.
VEHICLE EXTENSION *	3.0 SEC.	2.0 SEC.	2.0 SEC.	3.0 SEC.	2.0 SEC.		
YELLOW CHANGE INT.	4.1 SEC.	3.0 SEC.	3.8 SEC.	4.1 SEC.	3.8 SEC.	4.1 SEC.	3.8 SEC.
RED CLEARANCE	1.9 SEC.	2.3 SEC.	2.0 SEC.	1.9 SEC.	2.0 SEC.	1.9 SEC.	2.0 SEC.
MAXIMUM LIMIT *	50 SEC.	15 SEC.	35 SEC.	50 SEC.	35 SEC.		
RECALL POSITION	VEH. RECALL	NONE	NONE	VEH. RECALL	NONE		
VEHICLE CALL MEMORY	YELLOW LOCK	NONE	NONE	YELLOW LOCK	NONE		
DOUBLE ENTRY	OFF	OFF	ON	OFF	ON		
WALK *	4 SEC.	- SEC.	- SEC.	- SEC.	4 SEC.		
FLASHING DON'T WALK	14 SEC.	- SEC.	- SEC.	- SEC.	17 SEC.		
TYPE 3 LIMIT	- SEC.	- SEC.	- SEC.	- SEC.	- SEC.		
ALTERNATE EXTENSION	- SEC.	- SEC.	- SEC.	- SEC.	- SEC.		
ADD PER VEHICLE *	- SEC.	- SEC.	- SEC.	- SEC.	- SEC.		
MAXIMUM INITIAL *	- SEC.	- SEC.	- SEC.	- SEC.	- SEC.		
MAXIMUM GAP*	3.0 SEC.	2.0 SEC.	2.0 SEC.	3.0 SEC.	2.0 SEC.		
REDUCE 0.1 SEC EVERY *	- SEC.	- SEC.	- SEC.	- SEC.	- SEC.		
MINIMUM GAP	3.0 SEC.	2.0 SEC.	2.0 SEC.	3.0 SEC.	2.0 SEC.		

* These values may be field adjusted. Do not adjust Min Green and Extension times for phases 2 and 6 lower than what is shown. Min Green for all other phases should not be lower than 4 seconds.

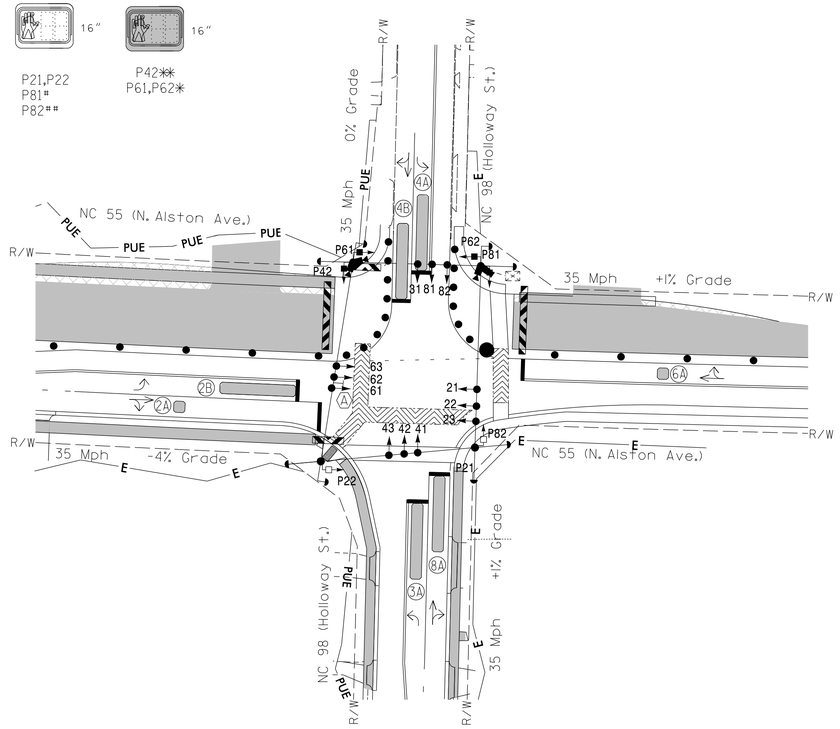

3 Phase
Fully Actuated
(Durham Signal System)

NOTES

1. Refer to "Road Standard Drawings NCDOT" dated January 2012, "Standard Specifications for Roads and Structures" dated January 2012.
2. Do not program signal for late night flashing operation unless otherwise directed by the Engineer.
3. Phase 3 may be lagged.
4. Reposition signal heads #21, #22, #23, #61, #62 and #63 during this phase of construction
5. Set all detector units to presence mode.
6. Program all timing information into phase banks 1,2, and 3 unless otherwise noted.
7. Set phase bank 3 maximum limit to 250 seconds for phases used.
8. Omit "WALK" and flashing "DON'T WALK" with no pedestrian calls.
9. Program pedestrian heads to countdown the flashing "Don't Walk" time.
10. Maximum times shown in timing chart are for free-run operation only. Coordinated signal system timing values supersede these values.
11. Bag and disconnect signal head #61 and pedestrian signal heads #P61 and #P62 for Temporary Design 5 and Temporary Design 7.
12. Pedestrian signal head #P42 shall remain disconnected and bagged for Temporary Design 5 and Temporary Design 7.
13. Reconnect and unbag pedestrian signal head #P81 for Temporary Design 5 and Temporary Design 7.
14. Reconnect and unbag signal heads #21, #31, #41, #42 and #43 and pedestrian signal head #P82 for Temporary Design 7.
15. Contractor shall adjust video detection zones as required.

LEGEND

PROPOSED		EXISTING
	Traffic Signal Head	
	Modified Signal Head	N/A
	Sign	
	Pedestrian Signal Head With Push Button & Sign	
	Signal Pole with Guy	
	Signal Pole with Sidewalk Guy	
	Inductive Loop Detector	
	Controller & Cabinet	
	Junction Box	
	2-in Underground Conduit	
N/A	Right of Way	
	Directional Arrow	
	Work Area	N/A
	Drums	N/A
E	Construction Easement	N/A
PDE	Permanent Utility Easement	N/A
	Barricades	N/A
	Direct Bury	
Ⓐ	"No Left Turn" (R3-2)	Ⓐ
	Type I Pushbutton Post	
	Video Detector	
	Video Detection Area	

Signal Upgrade - Temporary Design 7 (TMP Phase 2, Steps 7 - 12)
Signal Upgrade - Temporary Design 5 (TMP Phase 2, Steps 1 - 6)

SEPI ENGINEERING & CONSTRUCTION
1025 Wade Avenue
Raleigh, NC 27605
Tel:919-789-9977
Fax:919-789-9591
License #: C-2197

Prepared for the Offices of:
Transportation Mobility and Safety Division
STATE OF NORTH CAROLINA DEPARTMENT OF TRANSPORTATION
Signal Design Section
750 N.Greenfield Pkwy,Garner,NC 27529

NC 55 (North Alston Avenue)
at
US 70 - NC 98 (Holloway Street)
Division 5 Durham County Durham

PLAN DATE: September 2014 REVIEWED BY: J Hochanadel
PREPARED BY: R Drayton REVIEWED BY:

SCALE 0 40 1"=40'

REVISIONS	INIT.	DATE

SEAL
NORTH CAROLINA PROFESSIONAL SEAL 28430 ENGINEER JEFFREY P. HOCHANADEL

DocuSigned by: 4/02/15 DATE
SIG. INVENTORY NO. 05-1027T5/T7

3/20/2015
G:\47_Design\Traffic\TR13-017.00 NCDOT 2012 Traffic LSA\TR13-017.03 (U-3308 Signals\Traffic\Signals\Design\Signals\TEMP SIGNALS WITH VIDEO\05-1027\05-1027T5_T7.dgn
clawson

PROJECT REFERENCE NO.	SHEET NO.
U-3308	Sig.44.1

EDI MODEL 2018ECL-NC CONFLICT MONITOR PROGRAMMING DETAIL

(remove jumpers and set switches as shown)

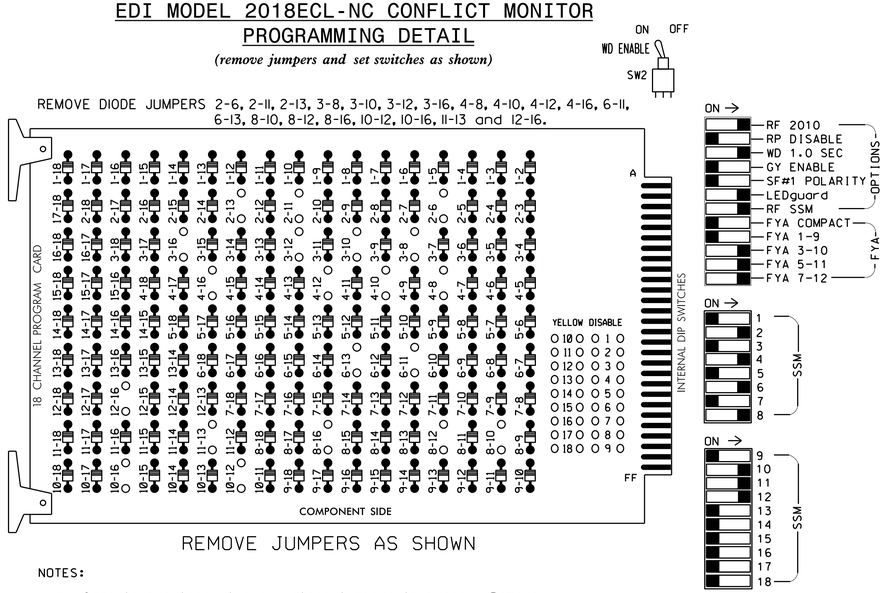

REMOVE JUMPERS AS SHOWN

■ = DENOTES POSITION OF SWITCH

NOTES:

1. Card is provided with all diode jumpers in place. Removal of any jumper allows its channels to run concurrently.
2. Ensure jumpers SEL2-SEL5 and SEL9 are present on the monitor board.
3. Ensure that Red Enable is active at all times during normal operation.
4. Connect serial cable from conflict monitor to comm. port 1 of 2070 controller. Ensure conflict monitor communicates with 2070.

NOTES

1. To prevent "flash-conflict" problems, insert red flash program blocks for all unused vehicle load switches in the output file. Verify that signal heads flash in accordance with the signal plans.
2. Program controller to Start Up in phases 2 and 6 green.
3. Set power-up flash time to 0 seconds within the controller programming. The conflict monitor will govern startup flash. Ensure STARTUP "RED START" is set to 0 seconds.
4. Enable Simultaneous Gap-Out feature for all phases.
5. Program all timing information into phase banks 1, 2, and 3 unless otherwise noted.
6. Set phase bank 3 maximum limit to 250 seconds for phases used.
7. Program phases 4 and 8 for Double Entry.
8. Ensure start up flash phases are coordinated with flash program block assignments.
9. Program Startup Ped Calls for phases 2 and 8.
10. Set the Red Revert interval on the controller to 1 second.
11. This cabinet and controller are part of the Durham Signal System.

EQUIPMENT INFORMATION

CONTROLLER.....2070E
CABINET.....332 W/ AUX
SOFTWARE.....McCAIN 2033
CABINET MOUNT.....BASE
OUTPUT FILE POSITIONS...18 WITH AUX FILE
LOAD SWITCHES USED.....S2,S3,S4,S5,S8,S11,S12, AUX S2,AUX S4,AUX S5
PHASES USED.....2,3,4,6,8,2 PED,8 PED
OVERLAP 1.....NOT USED
OVERLAP 2.....*
OVERLAP 3.....6
OVERLAP 4.....8

* See FYA PPLT Programming Detail on Sheet 2.

SIGNAL HEAD HOOK-UP CHART

LOAD SWITCH NO.	S1	S2	S3	S4	S5	S6	S7	S8	S9	S10	S11	S12	AUX S1	AUX S2	AUX S3	AUX S4	AUX S5	AUX S6
CMU CHANNEL NO.	1	2	13	3	4	14	5	6	15	7	8	16	9	10	17	11	12	18
PHASE	1	2	2 PED	3	4	4 PED	5	6	6 PED	7	8	8 PED	OL1	OL2	SPARE	OL3	OL4	SPARE
SIGNAL HEAD NO.	NU	22,23	P21, P22	31★	42,43	NU	NU	62,63	NU	NU	81,82	P81, P82	NU	31★	NU	21★	41★	NU
RED		128			101			134			107							
YELLOW		129		*	102			135			108							
GREEN		130			103			136			109							
RED ARROW														A124		A114	A101	
YELLOW ARROW														A125		A115	A102	
FLASHING YELLOW ARROW														A126		A116	A103	
GREEN ARROW				118														
✋			113									110						
🚶			115									112						

NU = Not Used

* Denotes install load resistor. See load resistor installation detail this sheet.

★ See pictorial of head wiring in detail below.

4 SECTION FYA PPLT SIGNAL WIRING DETAIL

(wire signal heads as shown)

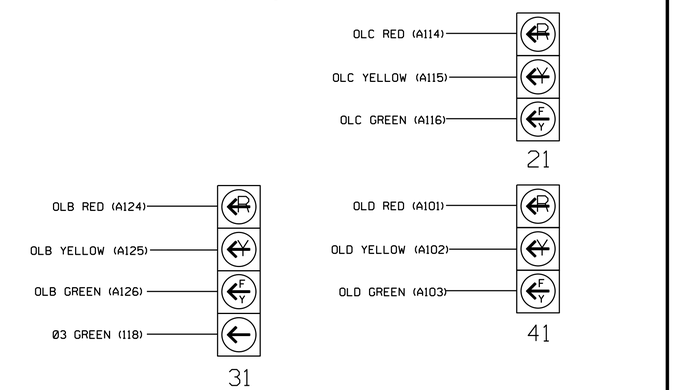

INPUT FILE POSITION LAYOUT

(front view)

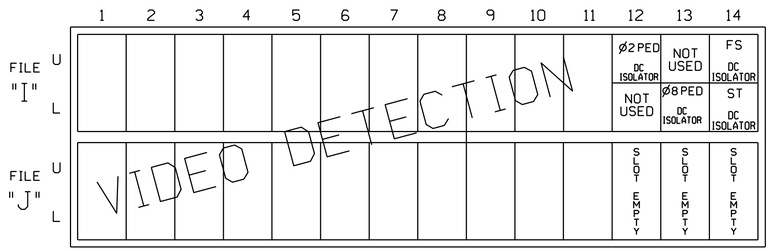

EX.: 1A, 2A, ETC. = LOOP NO.'S

FS = FLASH SENSE
ST = STOP TIME

INPUT FILE CONNECTION & PROGRAMMING CHART

LOOP NO.	LOOP TERMINAL	INPUT FILE POS.	DETECTOR NO.	PIN NO.	ATTRIBUTES	NEMA PHASE
PED PUSH BUTTONS						
P21,P22	TB8-4,6	I12U	25	67	2	2 PED
P81,P82	TB8-8,9	I13L	28	70	2	8 PED

INPUT FILE POSITION LEGEND: J2L
- FILE J
- SLOT 2
- LOWER

DETECTOR ATTRIBUTES LEGEND:
1-FULL TIME DELAY
2-PED CALL
3-RESERVED
4-COUNTING
5-EXTENSION
6-TYPE 3
7-CALLING
8-ALTERNATE

LOAD RESISTOR INSTALLATION DETAIL

(install resistors as shown below)

ACCEPTABLE VALUES	
VALUE (ohms)	WATTAGE
1.5K - 1.9K	25W (min)
2.0K - 3.0K	10W (min)

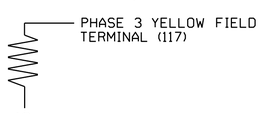

SPECIAL DETECTOR NOTE

Install a video detection system for vehicle detection. Perform installation according to manufacturer's directions and NCDOT engineer-approved mounting locations to accomplish the detection schemes shown on the Signal Design Plans.

THIS ELECTRICAL DETAIL IS FOR THE SIGNAL DESIGN: 05-1027T5 and 05-1027T7
DESIGNED: September 2014
SEALED: 4-02-15
REVISED: N/A

Electrcial Detail - Sheet 1 of 2

ELECTRICAL AND PROGRAMMING DETAILS FOR:

Prepared in the Offices of:
Transportation Mobility and Safety Division
Traffic Engineering Branch
Signals Management Section
NORTH CAROLINA DEPARTMENT OF TRANSPORTATION

750 N.Greenfield Pkwy,Garner,NC 27529

NC 55 (North Alston Avenue) at US 70 - NC 98 (Holloway Street)

Division 5 | Durham County | DS | Durham

PLAN DATE: November 2014 | REVIEWED BY: JTR

PREPARED BY: James Peterson | REVIEWED BY:

REVISIONS	INIT.	DATE

SEAL
NORTH CAROLINA PROFESSIONAL SEAL 008453 ENGINEER JOHN T. ROWE, JR.

DocuSigned by: John T. Rowe, Jr. 4/2/2015 DATE
-DA19DC1A5EE4424...

SIG. INVENTORY NO. 05-1027T5/T7

01-APR-2015 14:05
S:*ITSAS\MITS\Signals\Workgroups\Sig Mgmt\Peterson\M05027_sm_ele_20150106.dgn
jtpeterson

PROJECT REFERENCE NO.	SHEET NO.
U-3308	Sig.44.2

OVERLAPS [2-4] PROGRAMMING DETAIL

Program overlaps as follows:
Main Menu - 4) OVERLAP

PRESS '+' TWICE

OVERLAP [3]:
LOADSWITCH = 11 NOTE: FOR SIGNAL HEAD 21
VEH SET 1 = 6
YELLOW CLEARANCE = 4.1
RED CLEARANCE = 1.9

PRESS '+'

OVERLAP [4]:
LOADSWITCH = 12 NOTE: FOR SIGNAL HEAD 41
VEH SET 1 = 8
YELLOW CLEARANCE = 3.8
RED CLEARANCE = 2.0

END OF OVERLAP PROGRAMMING

FYA PPLT PROGRAMMING

1. Program Flashing Yellow Arrow phases as follows:
   Main Menu - 1) PHASE - 2) PHASE FUNCTIONS PAGE TWO
   PPLT FYA = PHASE 3

2. Assign output pin for Flashing Yellow Arrow as follows:
   Main Menu - 6) OUTPUTS - F) FYA PPLT
   Phase 3 = 96

3. Redirect RED and YELLOW outputs for the left turn phases as follows:
   Main Menu - 6) OUTPUTS - 8) REDIRECT PHASE
   Phase 3 RED = 94, Phase 3 YELLOW = 95

COUNTDOWN PEDESTRIAN SIGNAL OPERATION

Countdown Ped Signals are required to display timing only during Ped Clearance Interval. Consult Ped Signal Module user's manual for instructions on selecting this feature.

FLASHER CIRCUIT MODIFICATION DETAIL

IN ORDER TO INSURE THAT SIGNALS FLASH CONCURRENTLY ON THE SAME APPROACH, MAKE THE FOLLOWING FLASHER CIRCUIT CHANGES:

1. ON REAR OF PDA - REMOVE WIRE FROM TERM. T2-4 AND TERMINATE ON T2-2.
2. ON REAR OF PDA - REMOVE WIRE FROM TERM. T2-5 AND TERMINATE ON T2-3.
3. REMOVE FLASHER UNIT 2.

THE CHANGES LISTED ABOVE TIES ALL PHASES AND OVERLAPS TO FLASHER UNIT 1.

OVERLAP GREEN FLASH PROGRAMMING FOR 3 SECTION FYA

The following will cause the overlap green outputs to flash, which are wired to the flashing yellow arrow. Program as follows:

Main Menu - 1) PHASE - 2) PHASE FUNCTIONS PAGE TWO
OLAP G FL = 3, 4

THIS ELECTRICAL DETAIL IS FOR THE SIGNAL DESIGN: 05-1027T5 and 05-1027T7
DESIGNED: September 2014
SEALED: 4-02-15
REVISED: N/A

Electrcial Detail - Sheet 2 of 2

ELECTRICAL AND PROGRAMMING DETAILS FOR:

Prepared in the Offices of:
Transportation Mobility and Safety Division
STATE OF NORTH CAROLINA DEPARTMENT OF TRANSPORTATION
Signals Management Section
750 N.Greenfield Pkwy,Garner,NC 27529

NC 55 (North Alston Avenue)
at
US 70 - NC 98 (Holloway Street)
Division 5 Durham County Durham

PLAN DATE: November 2014	REVIEWED BY:	DS JTR	
PREPARED BY: James Peterson	REVIEWED BY:		
REVISIONS		INIT.	DATE

SEAL
NORTH CAROLINA PROFESSIONAL SEAL 008453 ENGINEER JOHN T. ROWE, JR.
DocuSigned by: John T. Rowe, Jr. 4/2/2015
DATE
SIG. INVENTORY NO. 05-1027T5/T7

3-MAR-2015 14:42
S:\TISSUE\TS Signals\Workgroups\Sig Man\Peterson\051027_sm_ele_20150106.dgn
jtpeterson

DocuSign Envelope ID: 2B82073C-8CA6-44D2-96FA-5BE27AB92A1C

PROJECT REFERENCE NO.	SHEET NO.
U-3308	Sig. 45.0

2 Phase
Fully Actuated
(Durham Signal System)

PHASING DIAGRAM

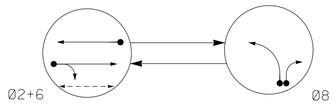

PHASING DIAGRAM DETECTION LEGEND

- DETECTED MOVEMENT
- UNDETECTED MOVEMENT (OVERLAP)
- UNSIGNALIZED MOVEMENT
- PEDESTRIAN MOVEMENT

TABLE OF OPERATION

SIGNAL FACE	PHASE Ø2+6	PHASE Ø8	FLASH
22,23	G	R	Y
62,63	G	R	Y
81,82	R	G	R
P21,P22	W	DW	DRK

2033 SOFTWARE w/ 2070 CONTROLLER
LOOP & DETECTOR UNIT INSTALLATION CHART

INDUCTIVE LOOPS						DETECTOR PROGRAMMING															
							TIMING		ATTRIBUTES										STATUS		
LOOP NO.	SIZE (ft)	TURNS	DIST. FROM STOPBAR (ft)	NEW	EXISTING	NEMA PHASE	DELAY	CARRY (STRETCH)	1 FULL TIME DESIGN	2 PEDESTRIAN CALL	3 RESERVED	4 COUNT	5 EXTENSION	6 TYPE 3	7 CALLING	8 ALTERNATE	SYSTEM LOOPS	NEW	EXISTING
2A	6x6	✳	70	-	✳	2	- SEC.	- SEC.	-	-	-	-	X	-	X	-	-	-	✳
6A	6x6	✳	70	✳	-	6	- SEC.	- SEC.	-	-	-	-	X	-	X	-	-	-	✳
8A	6x40	✳	0	-	✳	8	3 SEC.	- SEC.	-	-	-	-	X	-	X	-	-	-	✳
8B	6x40	✳	0	-	✳	8	10 SEC.	- SEC.	-	-	-	-	X	-	X	-	-	-	✳
PEDESTRIAN DETECTION																					
P21,P22	N/A	N/A	N/A	-	X	2	- SEC.	- SEC.	-	X	-	-	-	-	-	-	-	-	X

✳ Video Detection Zone

NOTES

1. Refer to "Road Standard Drawings NCDOT" dated January 2012, "Standard Specifications for Roads and Structures" dated January 2012.
2. Do not program signal for late night flashing operation unless otherwise directed by the Engineer.
3. Set all detector units to presence mode.
4. Program all timing information into phase banks 1,2, and 3 unless otherwise noted.
5. Set phase bank 3 maximum limit to 250 seconds for phases used.
6. Omit "WALK" and flashing "DON'T WALK" with no pedestrian calls.
7. Program pedestrian heads to countdown the flashing "Don't Walk" time.
8. Maximum times shown in timing chart are for free-run operation only. Coordinated signal system timing values supersede these values.
9. Disconnect and bag signal heads #21, #31, #41, #42 and #43 and pedestrian signal heads #P81 and #P82 during this phase of construction.
10. Signal head #61 and pedestrian signal heads #P42, #P61 and #P62 shall remain disconnected and bagged during this phase of construction.
11. Contractor shall adjust video detection zones as required.

SIGNAL FACE I.D.

All Heads L.E.D.
✳ See Note #9
✳✳ See Note #10

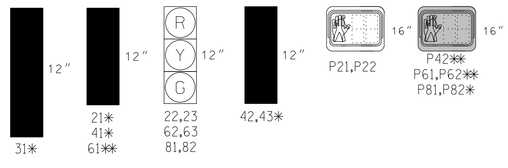

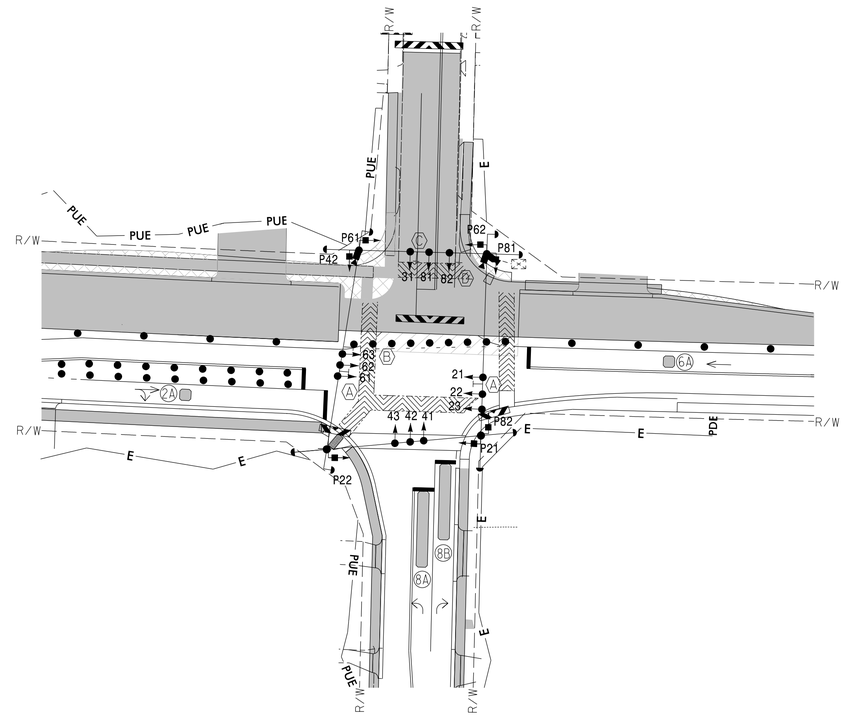

LEGEND

PROPOSED		EXISTING
	Traffic Signal Head	
	Modified Signal Head	N/A
	Sign	
	Pedestrian Signal Head With Push Button & Sign	
	Signal Pole with Guy	
	Signal Pole with Sidewalk Guy	
	Inductive Loop Detector	
	Controller & Cabinet	
	Junction Box	
	2-in Underground Conduit	
N/A	Right of Way	
	Directional Arrow	
Ⓐ	"No Left Turn" (R3-2)	Ⓐ
Ⓑ	"No Right Turn" (R3-1)	Ⓑ
Ⓒ	Left Arrow "ONLY" Sign (R3-5L)	Ⓒ
Ⓓ	Right Arrow "ONLY" Sign (R3-5R)	Ⓓ
	Work Area	N/A
	Drums	N/A
E	Construction Easement	N/A
PDE	Permanent Drainage Easement	N/A
	Barricades	N/A
	Direct Bury	
	Video Detector	
	Video Detection Area	

TIMING CHART
2033 SOFTWARE w/2070 CONTROLLER

PHASE	Ø2	Ø6	Ø8
MINIMUM INITIAL *	10 SEC.	10 SEC.	7 SEC.
VEHICLE EXTENSION *	3.0 SEC.	3.0 SEC.	2.0 SEC.
YELLOW CHANGE INT.	4.1 SEC.	3.8 SEC.	3.0 SEC.
RED CLEARANCE	1.4 SEC.	1.4 SEC.	2.3 SEC.
MAXIMUM LIMIT *	50 SEC.	50 SEC.	35 SEC.
RECALL POSITION	VEH. RECALL	VEH. RECALL	NONE
VEHICLE CALL MEMORY	YELLOW LOCK	YELLOW LOCK	NONE
DOUBLE ENTRY	OFF	OFF	OFF
WALK *	4 SEC.	– SEC.	– SEC.
FLASHING DON'T WALK	14 SEC.	– SEC.	– SEC.
TYPE 3 LIMIT	– SEC.	– SEC.	– SEC.
ALTERNATE EXTENSION	– SEC.	– SEC.	– SEC.
ADD PER VEHICLE *	– SEC.	– SEC.	– SEC.
MAXIMUM INITIAL *	– SEC.	– SEC.	– SEC.
MAXIMUM GAP*	3.0 SEC.	3.0 SEC.	2.0 SEC.
REDUCE 0.1 SEC EVERY *	– SEC.	– SEC.	– SEC.
MINIMUM GAP	3.0 SEC.	3.0 SEC.	2.0 SEC.

* These values may be field adjusted. Do not adjust Min Green and Extension times for phases 2 and 6 lower than what is shown. Min Green for all other phases should not be lower than 4 seconds.

Signal Upgrade - Temporary Design 6 (TMP Phase 2, Steps 7-12)

SEPI ENGINEERING & CONSTRUCTION
1025 Wade Avenue
Raleigh, NC 27605
Tel:919-789-9977
Fax:919-789-9591
License #: C-2197

Prepared for the Offices of:
Transportation Mobility and Safety Division
STATE OF NORTH CAROLINA DEPARTMENT OF TRANSPORTATION
Signal Design Section
750 N.Greenfield Pkwy,Garner,NC 27529

NC 55 (North Alston Avenue)
at
US 70 - NC 98 (Holloway Street)
Division 5 Durham County Durham

PLAN DATE: September 2014 REVIEWED BY: J Hochanadel
PREPARED BY: R Drayton REVIEWED BY:

SCALE 0 40 1"=40'

REVISIONS	INIT.	DATE

SEAL
NORTH CAROLINA PROFESSIONAL SEAL 28430 ENGINEER JEFFREY P. HOCHANADEL

DocuSigned by: 4/02/15
-5078ED2BF9BC498...
DATE

SIG. INVENTORY NO. 05-1027T6

3/20/2015
G:\NCDOT\Construction\TIP\R13.017.00 NCDOT 2012 Traffic LSA\TIP\R13.017.03 (U-3308 Signals)\Traffic\Signals\Design\Signals\TEMP SIGNALS WITH VIDEO\05-1027\05-1027T6.dgn
clawson

PROJECT REFERENCE NO.	SHEET NO.
U-3308	Sig.45.1

EDI MODEL 2018ECL-NC CONFLICT MONITOR PROGRAMMING DETAIL

(remove jumpers and set switches as shown)

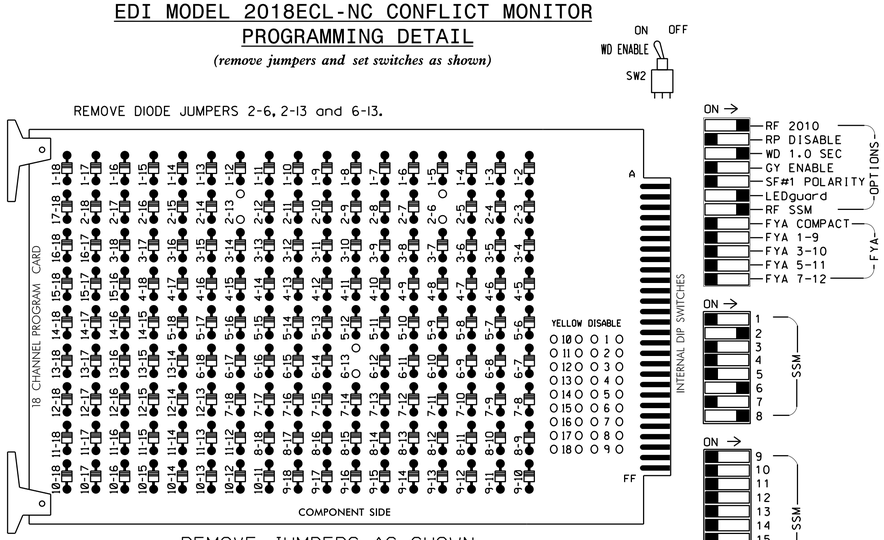

REMOVE JUMPERS AS SHOWN

NOTES:

1. Card is provided with all diode jumpers in place. Removal of any jumper allows its channels to run concurrently.
2. Ensure jumpers SEL2-SEL5 and SEL9 are present on the monitor board.
3. Ensure that Red Enable is active at all times during normal operation.
4. Connect serial cable from conflict monitor to comm. port 1 of 2070 controller. Ensure conflict monitor communicates with 2070.

■ = DENOTES POSITION OF SWITCH

NOTES

1. To prevent "flash-conflict" problems, insert red flash program blocks for all unused vehicle load switches in the output file. Verify that signal heads flash in accordance with the signal plans.
2. Program controller to Start Up in phases 2 and 6 green.
3. Set power-up flash time to 0 seconds within the controller programming. The conflict monitor will govern startup flash. Ensure STARTUP "RED START" is set to 0 seconds.
4. Enable Simultaneous Gap-Out feature for all phases.
5. Program all timing information into phase banks 1, 2, and 3 unless otherwise noted.
6. Set phase bank 3 maximum limit to 250 seconds for phases used.
7. Ensure start up flash phases are coordinated with flash program block assignments.
8. Program Startup Ped Calls for phase 2.
9. Set the Red Revert interval on the controller to 1 second.
10. This cabinet and controller are part of the Durham Signal System.

EQUIPMENT INFORMATION

CONTROLLER.....2070E
CABINET.....332 W/ AUX
SOFTWARE.....McCAIN 2033
CABINET MOUNT.....BASE
OUTPUT FILE POSITIONS...18 WITH AUX FILE
LOAD SWITCHES USED.....S2,S3,S8,S11
PHASES USED.....2,6,8,2 PED
OVERLAPS.....NONE

SIGNAL HEAD HOOK-UP CHART

LOAD SWITCH NO.	S1	S2	S3	S4	S5	S6	S7	S8	S9	S10	S11	S12	AUX S1	AUX S2	AUX S3	AUX S4	AUX S5	AUX S6
CMU CHANNEL NO.	1	2	13	3	4	14	5	6	15	7	8	16	9	10	17	11	12	18
PHASE	1	2	2 PED	3	4	4 PED	5	6	6 PED	7	8	8 PED	OL1	OL2	SPARE	OL3	OL4	SPARE
SIGNAL HEAD NO.	NU	22,23	P21, P22	NU	NU	NU	NU	62,63	NU	NU	81,82	NU	NU	NU	NU	NU	NU	NU
RED		128						134			107							
YELLOW		129						135			108							
GREEN		130						136			109							
RED ARROW																		
YELLOW ARROW																		
FLASHING YELLOW ARROW																		
GREEN ARROW																		
✋			113															
🚶			115															

NU = Not Used

COUNTDOWN PEDESTRIAN SIGNAL OPERATION

Countdown Ped Signals are required to display timing only during Ped Clearance Interval. Consult Ped Signal Module user's manual for instructions on selecting this feature.

INPUT FILE POSITION LAYOUT

(front view)

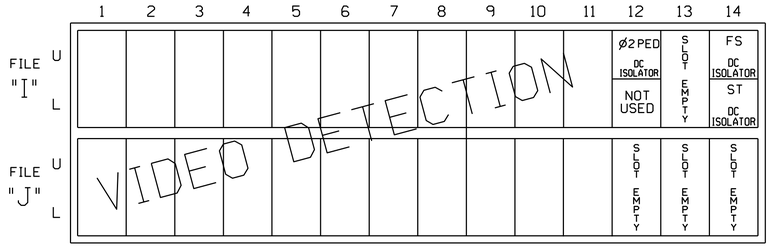

EX.: 1A, 2A, ETC. = LOOP NO.'S

FS = FLASH SENSE
ST = STOP TIME

INPUT FILE CONNECTION & PROGRAMMING CHART

LOOP NO.	LOOP TERMINAL	INPUT FILE POS.	DETECTOR NO.	PIN NO.	ATTRIBUTES	NEMA PHASE
PED PUSH BUTTONS						
P21,P22	TB8-4,6	I12U	25	67	2	2 PED

INPUT FILE POSITION LEGEND: J2L
FILE J
SLOT 2
LOWER

DETECTOR ATTRIBUTES LEGEND:
1-FULL TIME DELAY
2-PED CALL
3-RESERVED
4-COUNTING
5-EXTENSION
6-TYPE 3
7-CALLING
8-ALTERNATE

SPECIAL DETECTOR NOTE

Install a video detection system for vehicle detection. Perform installation according to manufacturer's directions and NCDOT engineer-approved mounting locations to accomplish the detection schemes shown on the Signal Design Plans.

THIS ELECTRICAL DETAIL IS FOR
THE SIGNAL DESIGN: 05-1027T6
DESIGNED: September 2014
SEALED: 4-02-15
REVISED: N/A

Electrcial Detail

ELECTRICAL AND PROGRAMMING DETAILS FOR:

Prepared in the Offices of:
Transportation Mobility and Safety Division
NORTH CAROLINA DEPARTMENT OF TRANSPORTATION
Signals Management Section
750 N.Greenfield Pkwy.Garner,NC 27529

NC 55 (North Alston Avenue)
at
US 70 - NC 98 (Holloway Street)

Division 5 Durham County DS Durham

PLAN DATE: November 2014	REVIEWED BY:	JTR
PREPARED BY: James Peterson	REVIEWED BY:	

REVISIONS	INIT.	DATE

SEAL
NORTH CAROLINA PROFESSIONAL SEAL 008453 ENGINEER JOHN T. ROWE, JR.

DocuSigned by: John T. Rowe, Jr. 4/2/2015
641D60C145EE4F3... DATE

SIG. INVENTORY NO. 05-1027T6

31-MAR-2015 14:23
S:\TSA\MTS\Signals\Workgroups\Sig Mgmt\Peterson\05102 7_smale_20150106.dgn
jtpeterson

DocuSign Envelope ID: 2B82073C-8CA6-44D2-96FA-5BE27AB92A1C

PROJECT REFERENCE NO.	SHEET NO.
U-3308	Sig. 46.0

PHASING DIAGRAM

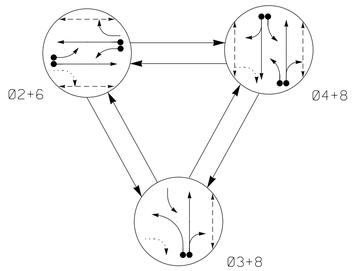

PHASING DIAGRAM DETECTION LEGEND

- DETECTED MOVEMENT
- UNDETECTED MOVEMENT (OVERLAP)
- UNSIGNALIZED MOVEMENT
- PEDESTRIAN MOVEMENT

TABLE OF OPERATION

SIGNAL FACE	PHASE Ø2+6	Ø3+8	Ø4+8	FLOAT
21	~~FY~~	~~R~~	~~R~~	~~Y~~
22,23	G	R	R	Y
31	~~R~~	←	~~FY~~	~~R~~
41	~~R~~	~~FY~~	~~FY~~	~~R~~
42,43	R	R	G	R
61	~~FY~~	~~R~~	~~R~~	~~Y~~
62,63	G	R	R	Y
81,82	R	G	G	R
P21,P22	W	DW	DW	DRK
P41,P42	DW	DW	W	DRK
P61,P62	W	DW	DW	DRK
P81,P82	DW	W	W	DRK

2033 SOFTWARE w/ 2070 CONTROLLER
LOOP & DETECTOR UNIT INSTALLATION CHART

INDUCTIVE LOOPS						DETECTOR PROGRAMMING															
							TIMING		ATTRIBUTES										STATUS	
LOOP NO.	SIZE (ft)	TURNS	DIST. FROM STOPBAR (ft)	NEW	EXISTING	NEMA PHASE	DELAY	CARRY (STRETCH)	1 FULL TIME DET.	2 PEDESTRIAN CALL	3 RESERVED	4 COUNT	5 EXTENSION	6 TYPE 3	7 CALLING	8 ALTERNATE	SYSTEM LOOPS	NEW	EXISTING
2A	6x6	4	70	X	-	2	- SEC.	- SEC.	-	-	-	-	X	-	X	-	-	X	-
2B	6x40	2-4-2	0	X	-	2	- SEC.	- SEC.	-	-	-	-	X	-	X	-	-	X	-
3A	6x40	2-4-2	0	X	-	3	15 SEC.	- SEC.	-	-	-	-	X	-	X	-	-	X	-
						8	3 SEC.	- SEC.	-	-	-	-	X	-	X	-	-	X	-
4A	6x40	2-4-2	0	X	-	4	3 SEC.	- SEC.	-	-	-	-	X	-	X	-	-	X	-
4B	6x40	2-4-2	0	X	-	4	10 SEC.	- SEC.	-	-	-	-	X	-	X	-	-	X	-
6A	6x6	4	70	X	-	6	- SEC.	- SEC.	-	-	-	-	X	-	X	-	-	X	-
6B	6x40	2-4-2	0	X	-	6	- SEC.	- SEC.	-	-	-	-	X	-	X	-	-	X	-
8A	6x40	2-4-2	0	X	-	8	10 SEC.	- SEC.	-	-	-	-	X	-	X	-	-	X	-
PEDESTRIAN DETECTION																					
P21,P22	N/A	N/A	N/A	X	-	2	- SEC.	- SEC.	-	X	-	-	-	-	-	-	-	-	X
P41,P42	N/A	N/A	N/A	X	-	4	- SEC.	- SEC.	-	X	-	-	-	-	-	-	-	-	X
P61,P62	N/A	N/A	N/A	X	-	6	- SEC.	- SEC.	-	X	-	-	-	-	-	-	-	-	X
P81,P82	N/A	N/A	N/A	X	-	8	- SEC.	- SEC.	-	X	-	-	-	-	-	-	-	-	X

SIGNAL FACE I.D.

All Heads L.E.D.

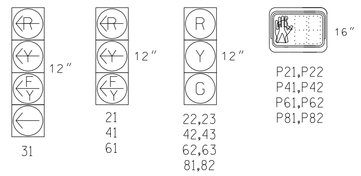

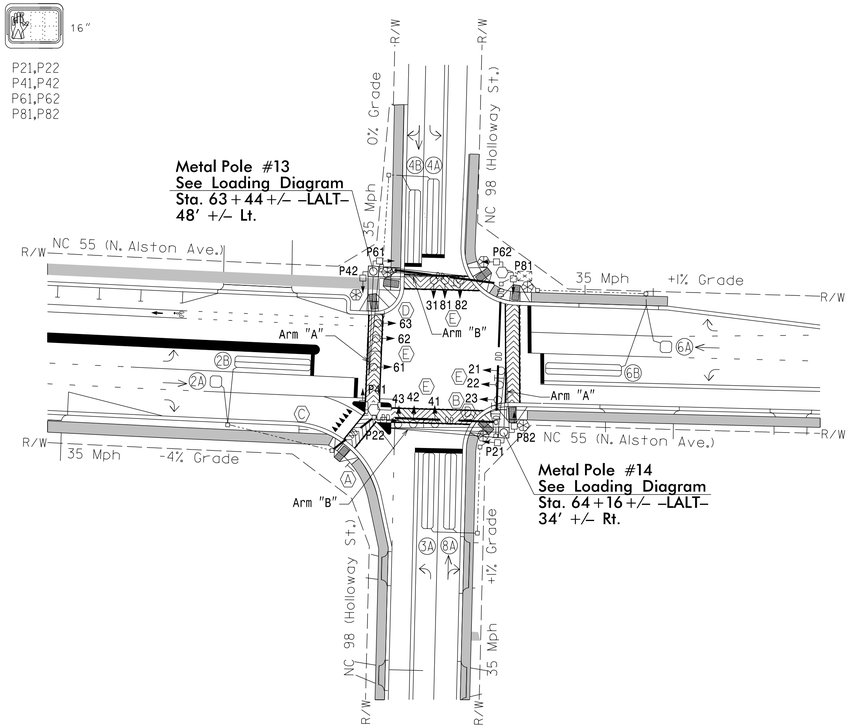

3 Phase
Fully Actuated
(Durham Signal System)

NOTES

1. Refer to "Road Standard Drawings NCDOT" dated January 2012, "Standard Specifications for Roads and Structures" dated January 2012.
2. Do not program signal for late night flashing operation unless otherwise directed by the Engineer.
3. Phase 3 may be lagged.
4. Set all detector units to presence mode.
5. Program all timing information into phase banks 1,2, and 3 unless otherwise noted.
6. Set phase bank 3 maximum limit to 250 seconds for phases used.
7. Omit "WALK" and flashing "DON'T WALK" with no pedestrian calls.
8. Program pedestrian heads to countdown the flashing "Don't Walk" time.
9. Maximum times shown in timing chart are for free-run operation only. Coordinated signal system timing values supersede these values.
10. Pedestrian pedestals are conceptual and shown for reference only. See sheets P1-P3 for pushbutton location details.

LEGEND

PROPOSED		EXISTING
○→	Traffic Signal Head	●→
◐→	Modified Signal Head	N/A
⊣	Sign	⊣
▯↓	Pedestrian Signal Head With Push Button & Sign	■↓
○	Signal Pole with Guy	●
○,	Signal Pole with Sidewalk Guy	●,
▭	Inductive Loop Detector	▭
⊠	Controller & Cabinet	⊡
□	Junction Box	■
-·-·-	2-in Underground Conduit	-·-·-
N/A	Right of Way	- - - -
→	Directional Arrow	→
DD	Directional Drill	N/A
Ⓐ	"Yield" Sign (R1-2)	Ⓐ
Ⓑ	"Turning Traffic Must Yield to Pedestrians" Sign (R10-15)	Ⓑ
Ⓒ	"Pedestrian Traffic" Sign (W11-2)	Ⓒ
Ⓓ	Right Arrow "Only" Sign (R3-5R)	Ⓓ
Ⓔ	Street Name Sign	Ⓔ
⊛	Type I Pushbotton Post	◘
⬡	Type II Signal Pedestal	⬢
⊂▭	Metal Pole with Mastarm	⊂■

TIMING CHART
2033 SOFTWARE w/2070 CONTROLLER

PHASE	Ø2	Ø3	Ø4	Ø6	Ø8	OL1	OL3	OL4
MINIMUM INITIAL *	10 SEC.	7 SEC.	7 SEC.	10 SEC.	7 SEC.	0 SEC.	0 SEC.	0 SEC.
VEHICLE EXTENSION *	3.0 SEC.	2.0 SEC.	2.0 SEC.	3.0 SEC.	2.0 SEC.			
YELLOW CHANGE INT.	4.1 SEC.	3.8 SEC.	3.8 SEC.	4.1 SEC.	3.8 SEC.	4.1 SEC.	4.1 SEC.	3.8 SEC.
RED CLEARANCE	1.8 SEC.	2.3 SEC.	2.0 SEC.	1.8 SEC.	2.0 SEC.	1.8 SEC.	1.8 SEC.	2.0 SEC.
MAXIMUM LIMIT *	50 SEC.	15 SEC.	35 SEC.	50 SEC.	35 SEC.	50 SEC.	50 SEC.	50 SEC.
RECALL POSITION	VEH. RECALL	NONE	NONE	VEH. RECALL	NONE			
VEHICLE CALL MEMORY	YELLOW LOCK	NONE	NONE	YELLOW LOCK	NONE			
DOUBLE ENTRY	OFF	OFF	ON	OFF	ON			
WALK *	4 SEC.	- SEC.	4 SEC.	4 SEC.	4 SEC.			
FLASHING DON'T WALK	9 SEC.	- SEC.	10 SEC.	8 SEC.	12 SEC.			
MIN PED CLEARANCE	5 SEC.	- SEC.	5 SEC.	4 SEC.	6 SEC.			
TYPE 3 LIMIT	- SEC.	- SEC.	- SEC.	- SEC.	- SEC.			
ALTERNATE EXTENSION	- SEC.	- SEC.	- SEC.	- SEC.	- SEC.			
ADD PER VEHICLE *	- SEC.	- SEC.	- SEC.	- SEC.	- SEC.			
MAXIMUM INITIAL *	- SEC.	- SEC.	- SEC.	- SEC.	- SEC.			
MAXIMUM GAP*	3.0 SEC.	2.0 SEC.	2.0 SEC.	3.0 SEC.	2.0 SEC.			
REDUCE 0.1 SEC EVERY *	- SEC.	- SEC.	- SEC.	- SEC.	- SEC.			
MINIMUM GAP	3.0 SEC.	2.0 SEC.	2.0 SEC.	3.0 SEC.	2.0 SEC.			

* These values may be field adjusted. Do not adjust Min Green and Extension times for phases 2 and 6 lower than what is shown. Min Green for all other phass should not be lower than 4 seconds.

Signal Upgrade - Final Design

SEPI ENGINEERING & CONSTRUCTION
1025 Wade Avenue
Raleigh, NC 27605
Tel:919-789-9977
Fax:919-789-9591
License #: C-2197

Prepared for the Offices of:
Transportation Mobility and Safety Division
NORTH CAROLINA DEPARTMENT OF TRANSPORTATION
Signal Design Section
750 N.Greenfield Pkwy,Garner,NC 27529

NC 55 (North Alston Avenue)
at
NC 98 (Holloway Street)
Division 5 Durham County Durham

PLAN DATE: September 2014 REVIEWED BY: J Hochanadel
PREPARED BY: C Lawson REVIEWED BY:

SCALE 0 40 1"=40'

REVISIONS	INIT.	DATE

SEAL
NORTH CAROLINA PROFESSIONAL SEAL 28430 ENGINEER JEFFREY P. HOCHANADEL

DocuSigned by: 4/02/15
50781D28F86C498...
DATE

SIG. INVENTORY NO. 05-1027

3/20/2015
C:\MYDOCS\portation\TR13.017.00 NCDOT 2012 Traffic LSA\TR13.017.03 (U-3308 Signals\Traffic\Signals\Design\Signals\FINAL SIGNALS WITH MAST ARMS\05-1027.dgn
clawson

PROJECT REFERENCE NO.	SHEET NO.
U-3308	Sig.46.1

EDI MODEL 2018ECL-NC CONFLICT MONITOR PROGRAMMING DETAIL

(remove jumpers and set switches as shown)

REMOVE DIODE JUMPERS 2-6, 2-9, 2-11, 2-13, 2-15, 3-8, 3-10, 3-12, 3-16, 4-8, 4-10, 4-12, 4-14, 4-16, 6-9, 6-11, 6-13, 6-15, 8-10, 8-12, 8-14, 8-16, 9-11, 9-13, 9-15, 10-12, 10-14, 10-16, 11-13, 11-15, 12-14, 12-16, 13-15 and 14-16.

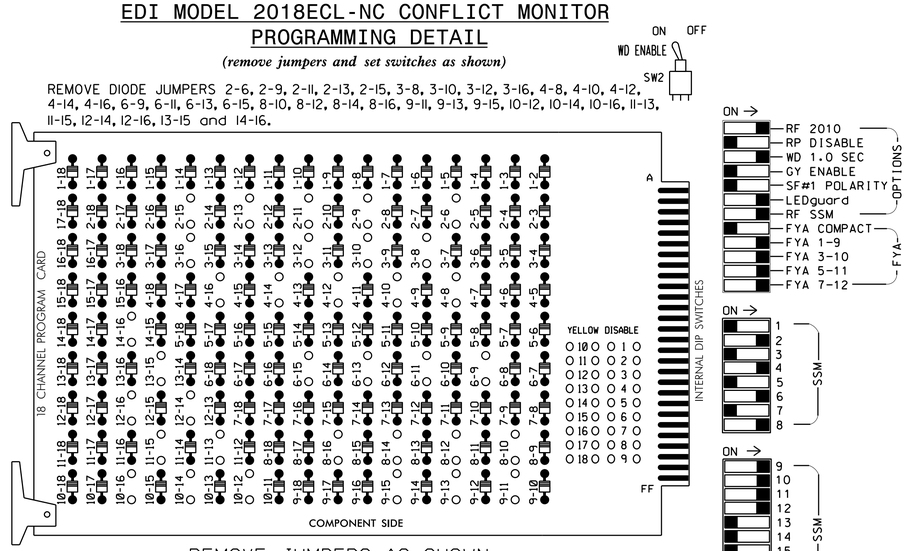

REMOVE JUMPERS AS SHOWN

■ = DENOTES POSITION OF SWITCH

NOTES:

1. Card is provided with all diode jumpers in place. Removal of any jumper allows its channels to run concurrently.
2. Ensure jumpers SEL2-SEL5 and SEL9 are present on the monitor board.
3. Ensure that Red Enable is active at all times during normal operation.
4. Connect serial cable from conflict monitor to comm. port 1 of 2070 controller. Ensure conflict monitor communicates with 2070.

NOTES

1. To prevent "flash-conflict" problems, insert red flash program blocks for all unused vehicle load switches in the output file. Verify that signal heads flash in accordance with the signal plans.
2. Program controller to Start Up in phases 2 and 6 green.
3. Set power-up flash time to 0 seconds within the controller programming. The conflict monitor will govern startup flash. Ensure STARTUP "RED START" is set to 0 seconds.
4. Enable Simultaneous Gap-Out feature for all phases.
5. Program all timing information into phase banks 1, 2, and 3 unless otherwise noted.
6. Set phase bank 3 maximum limit to 250 seconds for phases used.
7. Program phases 4 and 8 for Double Entry.
8. Ensure start up flash phases are coordinated with flash program block assignments.
9. Program Startup Ped Calls for phases 2, 4, 6, and 8.
10. Set the Red Revert interval on the controller to 1 second.
11. This cabinet and controller are part of the Durham Signal System.

EQUIPMENT INFORMATION

CONTROLLER.....2070E
CABINET.....332 W/ AUX
SOFTWARE.....McCAIN 2033
CABINET MOUNT.....BASE
OUTPUT FILE POSITIONS...18 WITH AUX FILE
LOAD SWITCHES USED.....S2,S3,S4,S5,S6,S8,S9,S11,S12, AUX S1,AUX S2,AUX S4,AUX S5
PHASES USED.....2,3,4,6,8,2 PED,4 PED,6 PED,8 PED
OVERLAP 1.....2
OVERLAP 2.....*
OVERLAP 3.....6
OVERLAP 4.....8

* See FYA PPLT Programming Detail on Sheet 2.

SIGNAL HEAD HOOK-UP CHART

LOAD SWITCH NO.	S1	S2	S3	S4	S5	S6	S7	S8	S9	S10	S11	S12	AUX S1	AUX S2	AUX S3	AUX S4	AUX S5	AUX S6
CMU CHANNEL NO.	1	2	13	3	4	14	5	6	15	7	8	16	9	10	17	11	12	18
PHASE	1	2	2 PED	3	4	4 PED	5	6	6 PED	7	8	8 PED	OL1	OL2	SPARE	OL3	OL4	SPARE
SIGNAL HEAD NO.	NU	22,23	P21, P22	31 ★	42,43	P41, P42	NU	62,63	P61, P62	NU	81,82	P81, P82	61 ★	31 ★	NU	21 ★	41 ★	NU
RED		128			101			134			107							
YELLOW		129		*	102			135			108							
GREEN		130			103			136			109							
RED ARROW													A121	A124		A114	A101	
YELLOW ARROW													A122	A125		A115	A102	
FLASHING YELLOW ARROW													A123	A126		A116	A103	
GREEN ARROW				118														
✋			113			104			119			110						
🚶			115			106			121			112						

NU = Not Used

* Denotes install load resistor. See load resistor installation detail this sheet.

★ See pictorial of head wiring in detail below.

4 SECTION FYA PPLT SIGNAL WIRING DETAIL

(wire signal heads as shown)

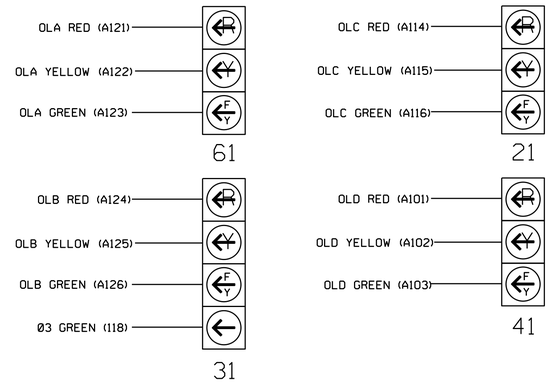

INPUT FILE POSITION LAYOUT

(front view)

		1	2	3	4	5	6	7	8	9	10	11	12	13	14
FILE "I"	U	SLOT EMPTY	Ø 2 2A	SLOT EMPTY	SLOT EMPTY	Ø 3,8 3A	Ø 4 4A	SLOT EMPTY	SLOT EMPTY	SLOT EMPTY	SLOT EMPTY	SLOT EMPTY	Ø2 PED DC ISOLATOR	Ø6 PED DC ISOLATOR	FS DC ISOLATOR
	L		Ø 2 2B			NOT USED	Ø 4 4B						Ø4 PED DC ISOLATOR	Ø8 PED DC ISOLATOR	ST DC ISOLATOR
FILE "J"	U	SLOT EMPTY	Ø 6 6A	SLOT EMPTY	SLOT EMPTY	SLOT EMPTY	Ø 8 8A	SLOT EMPTY	REMOVED	SLOT EMPTY	SLOT EMPTY	SLOT EMPTY	SLOT EMPTY	SLOT EMPTY	SLOT EMPTY
	L		Ø 6 6B				NOT USED								

EX.: 1A, 2A, ETC. = LOOP NO.'S

FS = FLASH SENSE
ST = STOP TIME

INPUT FILE CONNECTION & PROGRAMMING CHART

LOOP NO.	LOOP TERMINAL	INPUT FILE POS.	DETECTOR NO.	PIN NO.	ATTRIBUTES	NEMA PHASE
2A	TB2-5,6	I2U	1	39	5 7	2
2B	TB2-7,8	I2L	5	43	5 7	2
3A	TB4-5,6	I5U	16	58	5 7	3
			12	58	5 7	8
4A	TB4-9,10	I6U	3	41	5 7	4
4B	TB4-11,12	I6L	7	45	5 7	4
6A	TB3-5,6	J2U	2	40	5 7	6
6B	TB3-7,8	J2L	6	44	5 7	6
8A	TB5-9,10	J6U	4	42	5 7	8
PED PUSH BUTTONS						
P21,P22	TB8-4,6	I12U	25	67	2	2 PED
P41,P42	TB8-5,6	I12L	27	69	2	4 PED
P61,P62	TB8-7,9	I13U	26	68	2	6 PED
P81,P82	TB8-8,9	I13L	28	70	2	8 PED

INPUT FILE POSITION LEGEND: J2L
- FILE J
- SLOT 2
- LOWER

DETECTOR ATTRIBUTES LEGEND:
1-FULL TIME DELAY
2-PED CALL
3-RESERVED
4-COUNTING
5-EXTENSION
6-TYPE 3
7-CALLING
8-ALTERNATE

LOAD RESISTOR INSTALLATION DETAIL

(install resistors as shown below)

ACCEPTABLE VALUES	
VALUE (ohms)	WATTAGE
1.5K - 1.9K	25W (min)
2.0K - 3.0K	10W (min)

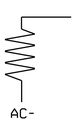

THIS ELECTRICAL DETAIL IS FOR
THE SIGNAL DESIGN: 05-1027
DESIGNED: September 2014
SEALED: 4-02-15
REVISED: N/A

Electrcial Detail - Sheet 1 of 2

ELECTRICAL AND PROGRAMMING DETAILS FOR:

Prepared in the Offices of:

Transportation Mobility and Safety Division
NORTH CAROLINA DEPARTMENT OF TRANSPORTATION
Signals Management Section

750 N.Greenfield Pkwy,Garner,NC 27529

NC 55 (North Alston Avenue) at NC 98 (Holloway Street)

Division 5 | Durham County | DR | Durham

PLAN DATE: November 2014 | REVIEWED BY: GTR

PREPARED BY: James Peterson | REVIEWED BY:

REVISIONS	INIT.	DATE

SEAL

NORTH CAROLINA PROFESSIONAL SEAL 008453 ENGINEER JOHN T. ROWE, JR.

DocuSigned by: John T. Rowe, Jr. 4/2/2015
641D60C145E64F5...
DATE

SIG. INVENTORY NO. 05-1027

31-MAR-2015 14:43
S:\#TISGU#TIS Signals#Workgroups#Sig Mgt#Peterson#051027_sm.ele.20150106.dgn
jmpeterson

PROJECT REFERENCE NO.	SHEET NO.
U-3308	Sig.46.2

OVERLAPS [1-4] PROGRAMMING DETAIL

Program overlaps as follows:
Main Menu - 4) OVERLAP

OVERLAP [1]:
LOADSWITCH = 9 NOTE: FOR SIGNAL HEAD 61
VEH SET 1 = 2
YELLOW CLEARANCE = 4.1
RED CLEARANCE = 1.8

PRESS '+' TWICE

OVERLAP [3]:
LOADSWITCH = 11 NOTE: FOR SIGNAL HEAD 21
VEH SET 1 = 6
YELLOW CLEARANCE = 4.1
RED CLEARANCE = 1.8

PRESS '+'

OVERLAP [4]:
LOADSWITCH = 12 NOTE: FOR SIGNAL HEAD 41
VEH SET 1 = 8
YELLOW CLEARANCE = 3.8
RED CLEARANCE = 2.0

END OF OVERLAP PROGRAMMING

FYA PPLT PROGRAMMING

1. Program Flashing Yellow Arrow phases as follows:
   Main Menu - 1) PHASE - 2) PHASE FUNCTIONS PAGE TWO
   PPLT FYA = PHASE 3

2. Assign output pin for Flashing Yellow Arrow as follows:
   Main Menu - 6) OUTPUTS - F) FYA PPLT
   Phase 3 = 96

3. Redirect RED and YELLOW outputs for the left turn phases as follows:
   Main Menu - 6) OUTPUTS - 8) REDIRECT PHASE
   Phase 3 RED = 94, Phase 3 YELLOW = 95

COUNTDOWN PEDESTRIAN SIGNAL OPERATION

Countdown Ped Signals are required to display timing only during Ped Clearance Interval. Consult Ped Signal Module user's manual for instructions on selecting this feature.

FLASHER CIRCUIT MODIFICATION DETAIL

IN ORDER TO INSURE THAT SIGNALS FLASH CONCURRENTLY ON THE SAME APPROACH, MAKE THE FOLLOWING FLASHER CIRCUIT CHANGES:

1. ON REAR OF PDA - REMOVE WIRE FROM TERM. T2-4 AND TERMINATE ON T2-2.
2. ON REAR OF PDA - REMOVE WIRE FROM TERM. T2-5 AND TERMINATE ON T2-3.
3. REMOVE FLASHER UNIT 2.

THE CHANGES LISTED ABOVE TIES ALL PHASES AND OVERLAPS TO FLASHER UNIT 1.

OVERLAP GREEN FLASH PROGRAMMING FOR 3 SECTION FYA

The following will cause the overlap green outputs to flash, which are wired to the flashing yellow arrow. Program as follows:

Main Menu - 1) PHASE - 2) PHASE FUNCTIONS PAGE TWO
OLAP G FL = 1, 3, 4

THIS ELECTRICAL DETAIL IS FOR
THE SIGNAL DESIGN: 05-1027
DESIGNED: September 2014
SEALED: 4-02-15
REVISED: N/A

Electrcial Detail - Sheet 2 of 2

ELECTRICAL AND PROGRAMMING DETAILS FOR:

Prepared in the Offices of:
Transportation Mobility and Safety Division
STATE OF NORTH CAROLINA DEPARTMENT OF TRANSPORTATION
Signals Management Section
750 N.Greenfield Pkwy,Garner,NC 27529

NC 55 (North Alston Avenue)
at
NC 98 (Holloway Street)

Division 5 Durham County Durham

PLAN DATE: November 2014	REVIEWED BY:	DS JTR	
PREPARED BY: James Peterson	REVIEWED BY:		
REVISIONS		INIT.	DATE

SEAL
NORTH CAROLINA PROFESSIONAL SEAL 008453 ENGINEER JOHN T. ROWE, JR.
DocuSigned by: John T. Rowe, Jr. 4/2/2015
641D60C145EE4F5 DATE
SIG. INVENTORY NO. 05-1027

31-MAR-2015 14:34
S:\TS&SU\ITS Signals\Workgroups\Sig Man\Peterson\051027_sm_ele_20150106.dgn
jtpeterson

DocuSign Envelope ID: 2B82073C-8CA6-44D2-96FA-5BE27AB92A1C

Design Loading for METAL POLE NO. 13, MAST ARM A

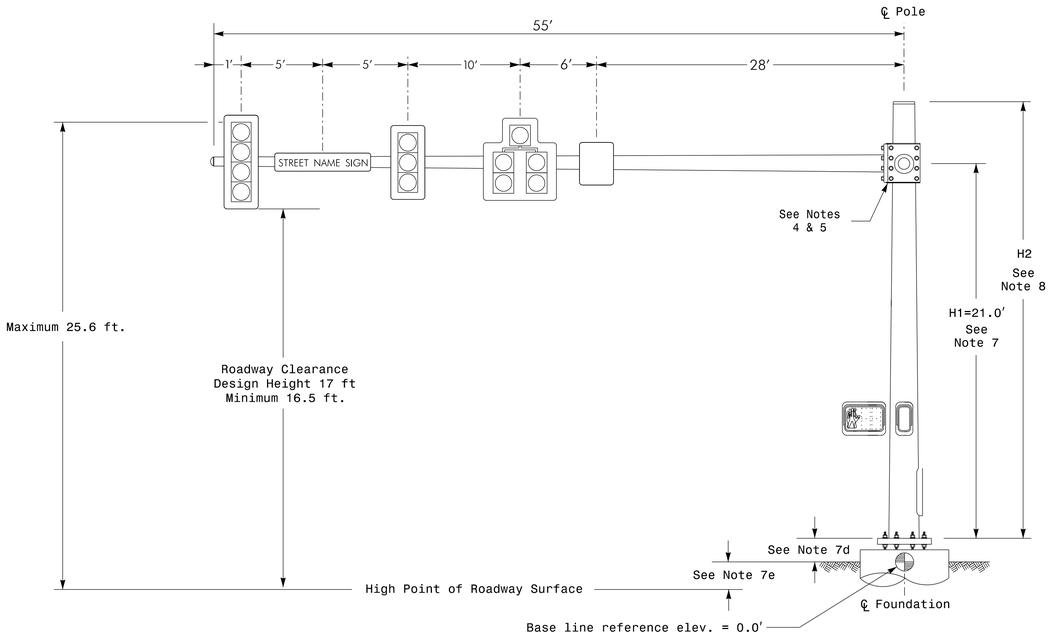

Elevation View @ 0°

Design Loading for METAL POLE NO. 13, MAST ARM B

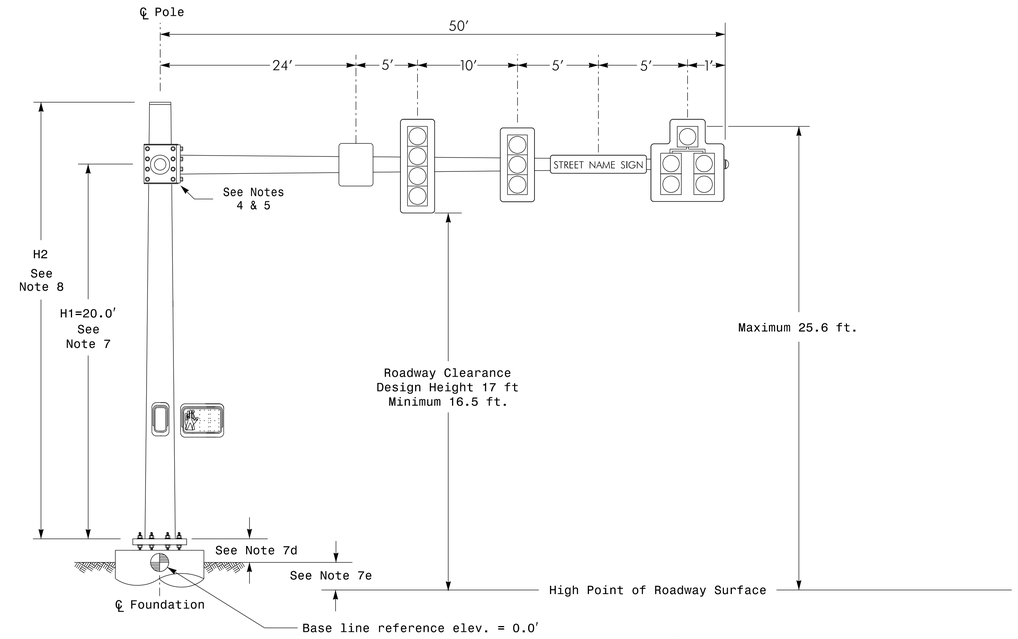

Elevation View @ 270°

SPECIAL NOTE

The contractor is responsible for verifying that the mast arm attachment height (H1) will provide the "Design Height" clearance from the roadway before submitting final shop drawings for approval. Verify elevation data below which was obtained by field measurement or from available project survey data.

Elevation Data for Mast Arm Attachment (H1)

Elevation Differences for:	Arm "A"	Arm "B"
Baseline reference point at ℄ Foundation @ ground level	0.0 ft.	0.0 ft.
Elevation difference at High point of roadway surface	+1.38 ft.	+0.52 ft.
Elevation difference at Edge of travelway or face of curb	+0.50 ft.	-0.15 ft.

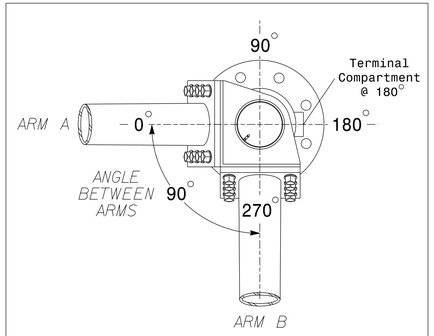

POLE RADIAL ORIENTATION

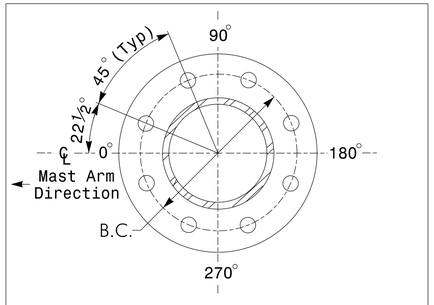

8 BOLT BASE PLATE DETAIL

See Note 6

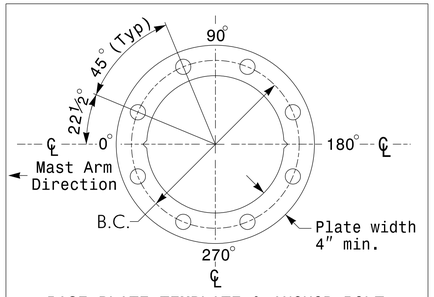

BASE PLATE TEMPLATE & ANCHOR BOLT LOCK PLATE DETAIL

For 8 Bolt Base Plate

METAL POLE No. 13

PROJECT REFERENCE NO.	SHEET NO.
U-3308	Sig. 46.3

MAST ARM LOADING SCHEDULE

LOADING SYMBOL	DESCRIPTION	AREA	SIZE	WEIGHT
	SIGNAL HEAD 12"–4 SECTION WITH 8" BACKPLATE RIGID MOUNTED	15.8 S.F.	31.5" W X 72.0" L	78 LBS
	SIGNAL HEAD 12"–3 SECTION WITH 8" BACKPLATE RIGID MOUNTED	12.8 S.F.	31.5" W X 58.5" L	63 LBS
	SIGNAL HEAD 12"–5 SECTION WITH 8" BACKPLATE RIGID MOUNTED	20.7 S.F.	48.0" W X 62.0" L	107 LBS
STREET NAME SIGN	STREET NAME SIGN RIGID MOUNTED	12.0 S.F.	18.0" W X 96.0" L	27 LBS
	PEDESTRIAN SIGNAL HEAD WITH MOUNTING HARDWARE	2.2 S.F.	18.5" W X 17.0" L	21 LBS
	SIGN RIGID MOUNTED	7.5 S.F.	30.0" W X 36.0" L	14 LBS

NOTES

Design Reference Material

1. Design the traffic signal structure and foundation in accordance with:
   - The 5th Edition 2009 AASHTO "Standard Specifications for Structural Supports for Highway Signs, Luminaires, and Traffic Signals, including all of the latest interim revisions.
   - The 2012 NCDOT "Standard Specifications for Roads and Structures". The latest addenda to these specifications can be found in the traffic signal project special provisions.
   - The 2012 NCDOT Roadway Standard Drawings.
   - The traffic signal project plans and special provisions.
   - The NCDOT "Metal Pole Standards" located at the following NCDOT website: https://connect.ncdot.gov/resources/safety/Pages/ITS-Design-Resources.aspx

Design Requirements

2. Design the traffic signal structure using the loading conditions shown in the elevation views. These are anticipated worst case "Design loads" and may not represent the actual loads that will be applied at the time of the installation. The contractor should refer to the traffic signal plans for the actual loads that will be applied at the time of the installation.
3. Design all signal supports using stress ratios that do not exceed 0.9.
4. The camber design for mast arm deflection should provide an appearance of a low pitched arch where the tip or the free end of the mast arm does not deflect below horizontal when fully loaded.
5. A clamp-type bolted mast arm-to-pole connection may be used instead of the welded ring stiffened box connection shown as long as the connection meets all of the design requirements. This requires staggering the connections. Use elevation data for each arm to determine appropriate arm connection points.
6. Design base plate with 8 anchor bolt holes. Provide 2 inch x 60 inch anchor bolts.
7. The mast arm attachment height (H1) shown is based on the following design assumptions:
   a. Mast arm slope and deflection are not considered in determining the arm attachment height as they are assumed to offset each other.
   b. Signal heads attached to the mast arm are rigid mounted and vertically centered on the arm.
   c. The roadway clearance height for design is as shown in the elevation views.
   d. The top of the pole base plate is .75 feet above the ground elevation.
   e. Refer to the Elevation Data chart for elevation differences between the proposed foundation ground level and the high point on the roadway.
8. The pole manufacturer will determine the total height (H2) of the pole using the greater of the following:
   - Mast arm attachment height (H1) plus 2 feet, or
   - H1 plus ½ of the total height of the mast arm attachment assembly plus 1 foot.
9. If pole location adjustments are required, the contractor must gain approval from the engineer as this may affect the mast arm lengths and arm attachment heights. The contractor may contact the Signal Design Structural Engineer for assistance at (919) 773-2800.
10. The contractor is responsible for verifying that the mast arm lengths shown will allow proper positioning of the signal heads over the roadway.
11. The contractor is responsible for providing soil penetration testing data (SPT) to the pole manufacturer so site specific foundations can be designed.

SEPI ENGINEERING & CONSTRUCTION
1025 Wade Avenue
Raleigh, NC 27605
Tel:919-789-9977
Fax:919-789-9591
License #: C-2197

NCDOT Wind Zone 4 (90 mph)

Prepared for the Offices of:
Transportation Mobility and Safety Division
STATE OF NORTH CAROLINA DEPARTMENT OF TRANSPORTATION
Signal Design Section
750 N.Greenfield Pkwy.Garner,NC 27529

NC 55 (North Alston Avenue) at NC 98 (Halloway Street)

Division 5 Durham County Durham

PLAN DATE: December 2014 REVIEWED BY: J Hochanadel

PREPARED BY: M Copple REVIEWED BY:

SCALE 0 N/A N/A

REVISIONS	INIT.	DATE

SEAL
NORTH CAROLINA PROFESSIONAL SEAL 28430 ENGINEER JEFFREY P. HOCHANADEL

DocuSigned by: 4/02/15
50781D2BE9BC498...
DATE

SIG. INVENTORY NO. 05-1027

$$$$SYSTIME$$$$
$$$$USERNAME$$$$
$$$$DOCNAME$$$$

DocuSign Envelope ID: 2B82073C-8CA6-44D2-96FA-5BE27AB92A1C

Design Loading for METAL POLE NO. 14, MAST ARM A

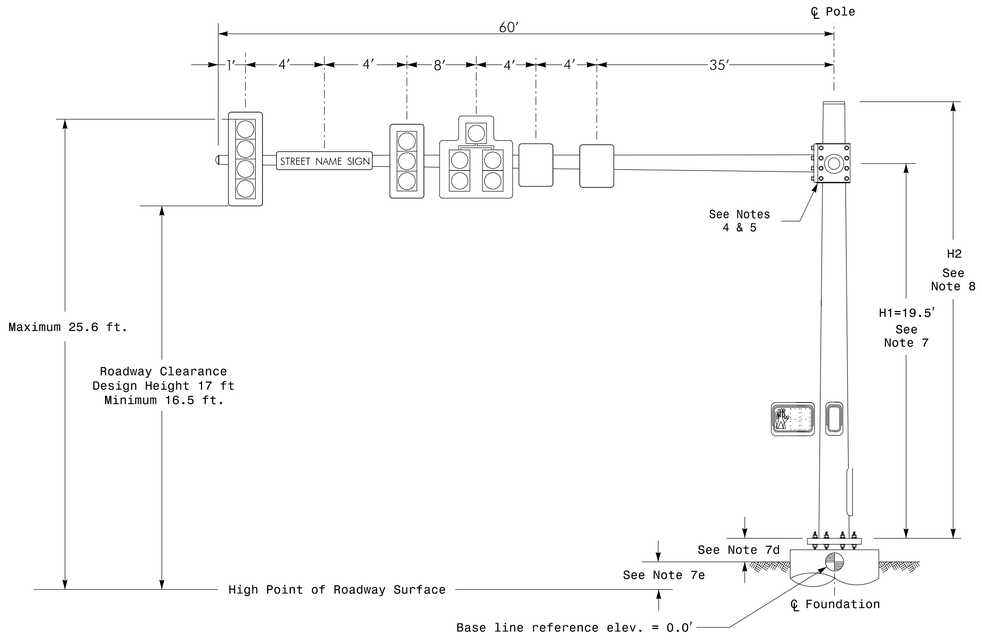

Elevation View @ 0°

Design Loading for METAL POLE NO. 14, MAST ARM B

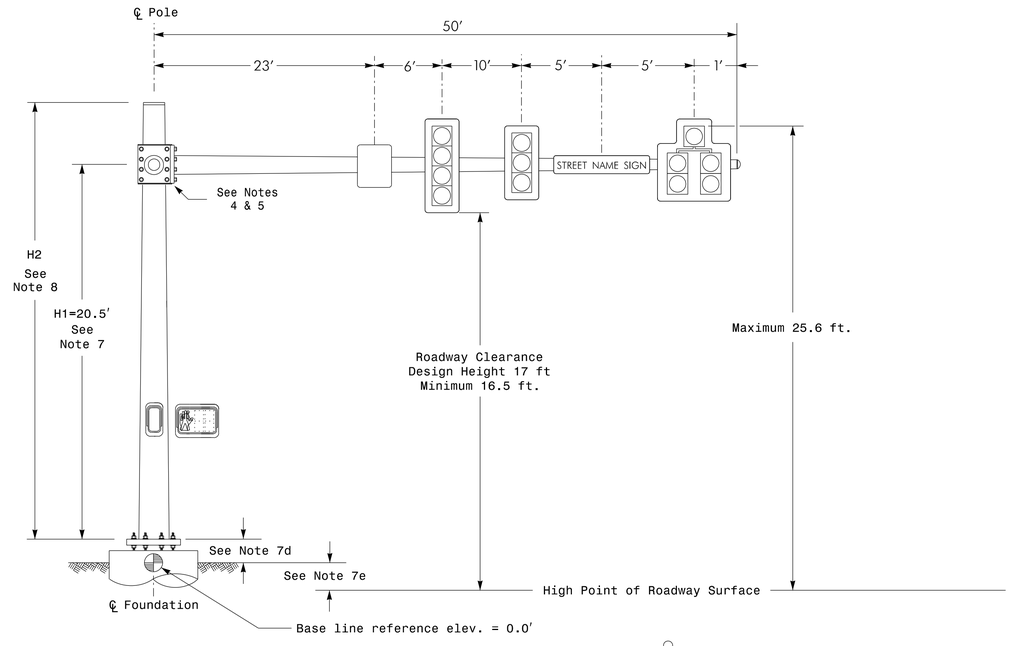

Elevation View @ 270°

$$$$SYSTIME$$$$
$$$$DOCNAME$$$$
$$$$USERNAME$$$$

SPECIAL NOTE

The contractor is responsible for verifying that the mast arm attachment height (H1) will provide the "Design Height" clearance from the roadway before submitting final shop drawings for approval. Verify elevation data below which was obtained by field measurement or from available project survey data.

Elevation Data for Mast Arm Attachment (H1)

Elevation Differences for:	Arm "A"	Arm "B"
Baseline reference point at ℄ Foundation @ ground level	0.0 ft.	0.0 ft.
Elevation difference at High point of roadway surface	-0.07 ft.	+1.09 ft.
Elevation difference at Edge of travelway or face of curb	-0.38 ft.	+0.54 ft.

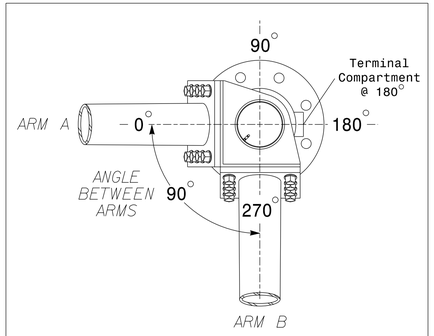

POLE RADIAL ORIENTATION

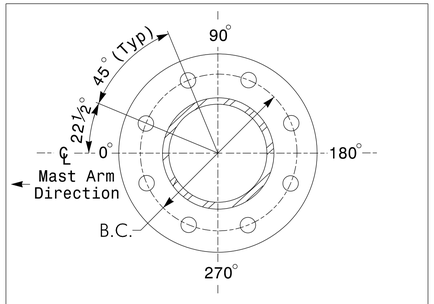

8 BOLT BASE PLATE DETAIL

See Note 6

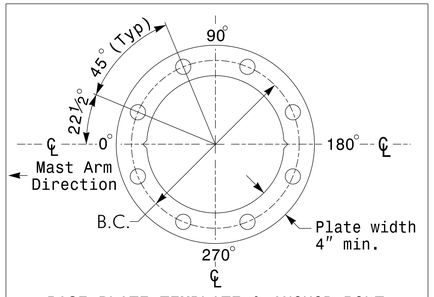

BASE PLATE TEMPLATE & ANCHOR BOLT LOCK PLATE DETAIL

For 8 Bolt Base Plate

METAL POLE No. 14

PROJECT REFERENCE NO.	SHEET NO.
U-3308	Sig. 46.4

MAST ARM LOADING SCHEDULE

LOADING SYMBOL	DESCRIPTION	AREA	SIZE	WEIGHT
	SIGNAL HEAD 12"–4 SECTION WITH 8" BACKPLATE RIGID MOUNTED	15.8 S.F.	31.5" W X 72.0" L	78 LBS
	SIGNAL HEAD 12"–3 SECTION WITH 8" BACKPLATE RIGID MOUNTED	12.8 S.F.	31.5" W X 58.5" L	63 LBS
	SIGNAL HEAD 12"–5 SECTION WITH 8" BACKPLATE RIGID MOUNTED	20.7 S.F.	48.0" W X 62.0" L	107 LBS
STREET NAME SIGN	STREET NAME SIGN RIGID MOUNTED	12.0 S.F.	18.0" W X 96.0" L	27 LBS
	PEDESTRIAN SIGNAL HEAD WITH MOUNTING HARDWARE	2.2 S.F.	18.5" W X 17.0" L	21 LBS
	SIGN RIGID MOUNTED	7.5 S.F.	30.0" W X 36.0" L	14 LBS

NOTES

Design Reference Material

1. Design the traffic signal structure and foundation in accordance with:
   - The 5th Edition 2009 AASHTO "Standard Specifications for Structural Supports for Highway Signs, Luminaires, and Traffic Signals, including all of the latest interim revisions.
   - The 2012 NCDOT "Standard Specifications for Roads and Structures". The latest addenda to these specifications can be found in the traffic signal project special provisions.
   - The 2012 NCDOT Roadway Standard Drawings.
   - The traffic signal project plans and special provisions.
   - The NCDOT "Metal Pole Standards" located at the following NCDOT website: https://connect.ncdot.gov/resources/safety/Pages/ITS-Design-Resources.aspx

Design Requirements

2. Design the traffic signal structure using the loading conditions shown in the elevation views. These are anticipated worst case "Design loads" and may not represent the actual loads that will be applied at the time of the installation. The contractor should refer to the traffic signal plans for the actual loads that will be applied at the time of the installation.
3. Design all signal supports using stress ratios that do not exceed 0.9.
4. The camber design for mast arm deflection should provide an appearance of a low pitched arch where the tip or the free end of the mast arm does not deflect below horizontal when fully loaded.
5. A clamp-type bolted mast arm-to-pole connection may be used instead of the welded ring stiffened box connection shown as long as the connection meets all of the design requirements. This requires staggering the connections. Use elevation data for each arm to determine appropriate arm connection points.
6. Design base plate with 8 anchor bolt holes. Provide 2 inch x 60 inch anchor bolts.
7. The mast arm attachment height (H1) shown is based on the following design assumptions:
   a. Mast arm slope and deflection are not considered in determining the arm attachment height as they are assumed to offset each other.
   b. Signal heads attached to the mast arm are rigid mounted and vertically centered on the arm.
   c. The roadway clearance height for design is as shown in the elevation views.
   d. The top of the pole base plate is .75 feet above the ground elevation.
   e. Refer to the Elevation Data chart for elevation differences between the proposed foundation ground level and the high point on the roadway.
8. The pole manufacturer will determine the total height (H2) of the pole using the greater of the following:
   - Mast arm attachment height (H1) plus 2 feet, or
   - H1 plus ½ of the total height of the mast arm attachment assembly plus 1 foot.
9. If pole location adjustments are required, the contractor must gain approval from the engineer as this may affect the mast arm lengths and arm attachment heights. The contractor may contact the Signal Design Structural Engineer for assistance at (919) 773-2800.
10. The contractor is responsible for verifying that the mast arm lengths shown will allow proper positioning of the signal heads over the roadway.
11. The contractor is responsible for providing soil penetration testing data (SPT) to the pole manufacturer so site specific foundations can be designed.

SEPI ENGINEERING & CONSTRUCTION
1025 Wade Avenue
Raleigh, NC 27605
Tel:919-789-9977
Fax:919-789-9591
License #: C-2197

NCDOT Wind Zone 4 (90 mph)

Prepared for the Offices of:
Transportation Mobility and Safety Division
Traffic Engineering Branch
Signal Design Section
750 N.Greenfield Pkwy.Garner,NC 27529

NC 55 (North Alston Avenue) at NC 98 (Holloway Street)

Division 5 Durham County Durham

PLAN DATE: December 2014 REVIEWED BY: J Hochanadel

PREPARED BY: M Copple REVIEWED BY:

SCALE 0 N/A N/A

REVISIONS	INIT.	DATE

SEAL
NORTH CAROLINA PROFESSIONAL SEAL 28430 ENGINEER JEFFREY P. HOCHANADEL

DocuSigned by: 4/02/15
5078102BF98C498...
DATE

SIG. INVENTORY NO. 05-1027

PROJECT NO.	SHEET NO.
U-3308	Sig. M1

STATE OF NORTH CAROLINA
DIVISION OF HIGHWAYS

STANDARD DRAWINGS FOR METAL POLES

POLE STANDARDS

NCDOT METAL P

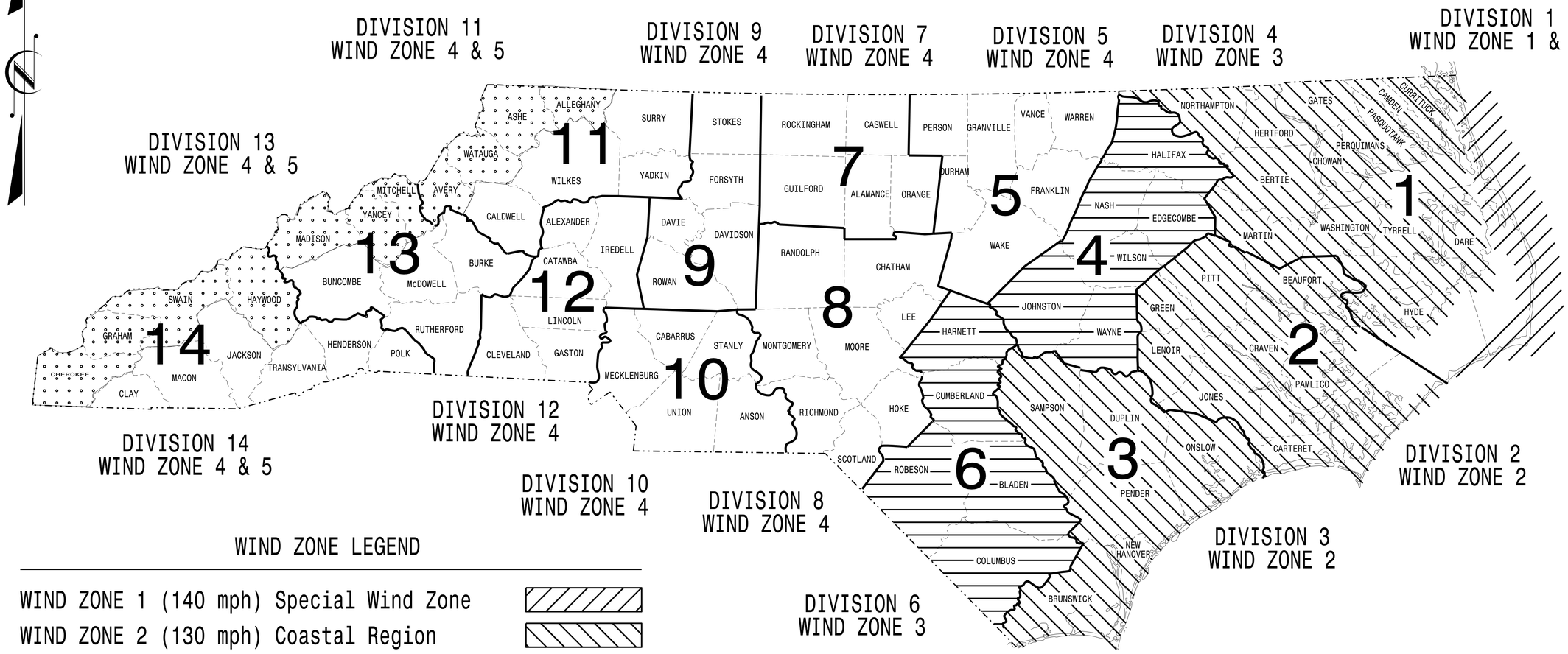

WIND ZONE LEGEND

WIND ZONE 1 (140 mph) Special Wind Zone	
WIND ZONE 2 (130 mph) Coastal Region	
WIND ZONE 3 (110 mph) Eastern Region	
WIND ZONE 4 (90 mph) Central & Mtn. Region	
WIND ZONE 5 (120 mph) Special Wind Zone	

https://connect.ncdot.gov/resources/safety/Pages/ITS-Design-Resources.aspx

Prepared in the Offices of:

Transportation Mobility and Safety Division
Signal Design Section
STATE OF NORTH CAROLINA - DEPARTMENT OF TRANSPORTATION

750 N.Greenfield Pkwy.Garner,NC 27529

Designed in conformance with the latest 2012 Interim to the 5th Edition 2009

AASHTO

Standard Specifications for Structural Supports for Highway Signs, Luminares, and Traffic Signals

INDEX OF PLANS

DRAWING NUMBER	DESCRIPTION
M 1	Title Sheet
M 2	Fabrication Details – All Poles
M 3	Fabrication Details – Strain Poles
M 4,5	Fabrication Details – Mast Arm Poles
M 6	Construction Details – Strain Poles
M 7	Construction Details – Foundations
M 8,9	Standard Strain Pole Foundations

NCDOT CONTACTS:

MOBILITY AND SAFETY DIVISION – ITS AND SIGNALS UNIT

G. A. FULLER, P.E. – STATE ITS AND SIGNALS ENGNEER

G. G. MURR, JR., P.E. – STATE SIGNALS ENGINEER

D.C. SARKAR, P.E. – ITS AND SIGNALS SENIOR STRUCTURAL ENGINEER

C.F. ANDREWS – ITS AND SIGNALS JOURNEY STRUCTURAL ENGINEER

SEAL

NORTH CAROLINA PROFESSIONAL SEAL 028094 ENGINEER DEBESH C. SARKAR

DocuSigned by: Debesh C. Sarkar 44EBE32E147E4C4...

8/26/2014
DATE

PROJECT REFERENCE NO.	SHEET NO.
U-3308	Sig. M2

Fabrication Details – All Poles

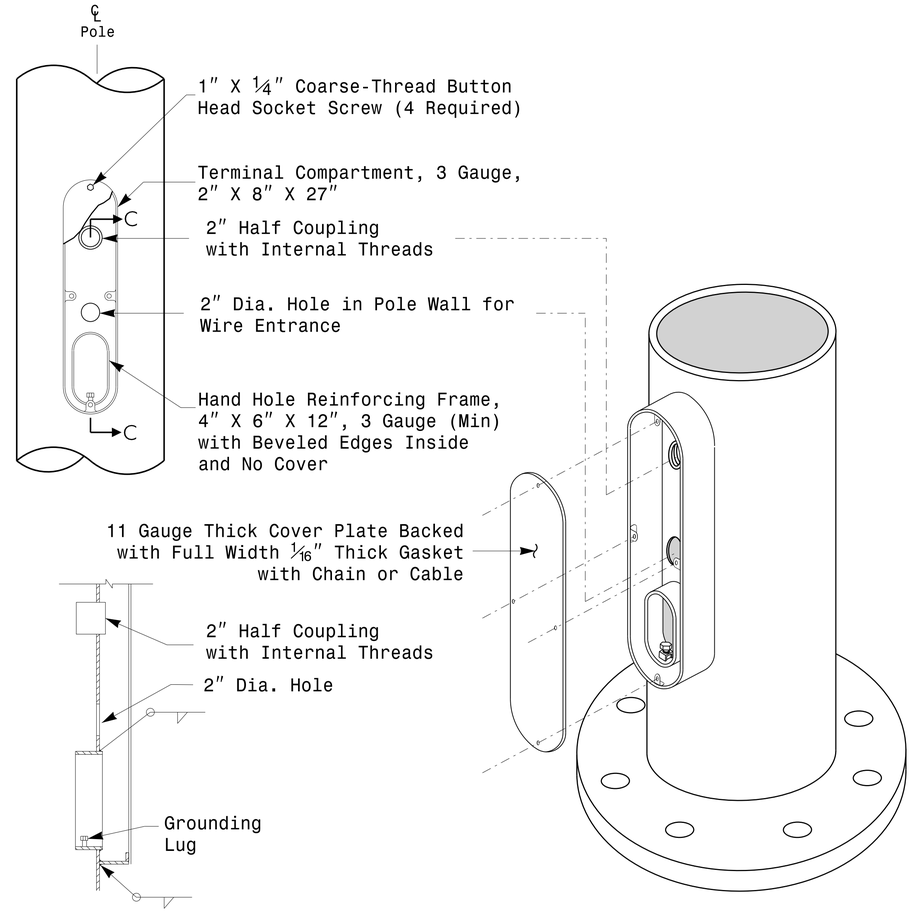

Section C-C

Note: Unless otherwise specified, locate Terminal Compartment 1 foot above the pole base plate at 180 degrees on the pole's radial index.

Terminal Compartment Detail

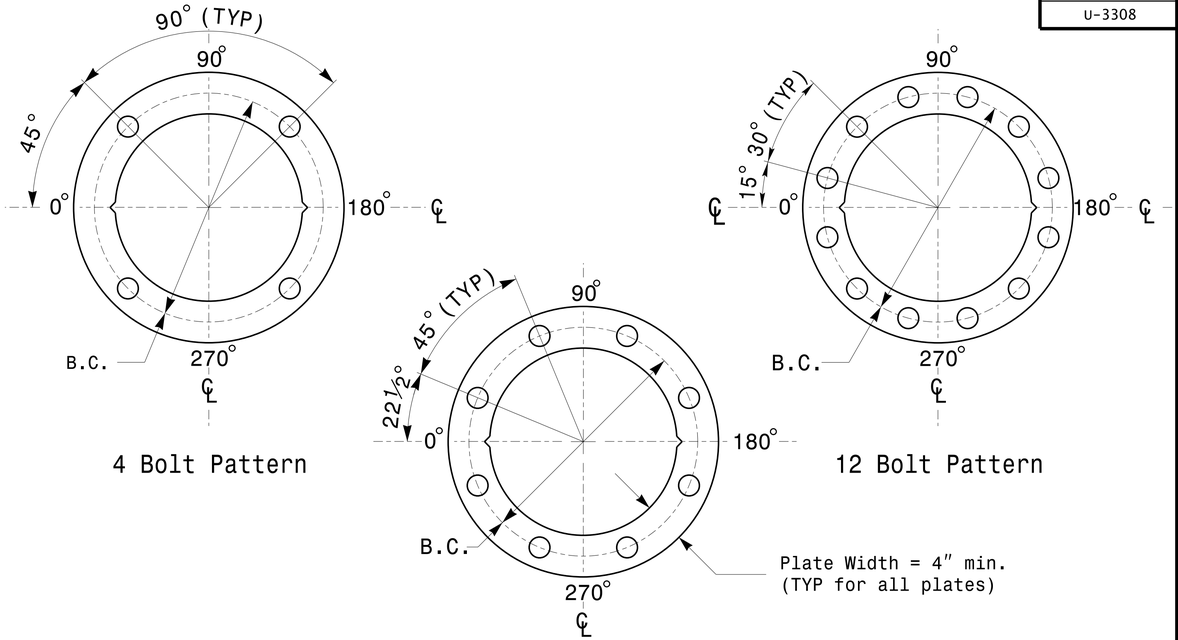

Construct Templates and Plates from ¼" min. thick Steel. Galvanizing is not required.

Base Plate Template and Anchor Bolt Lock Plate Details

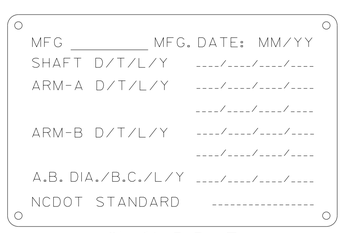

Shaft I.D. Tag
(Provide on Strain Poles and Mast Arm Poles)

Arm I.D. Tag
(Provide on each section of a multi-section mast arm)

Notes:
1) D= Diameter, T= Thickness, L= Length, Y= Yield Strength
2) A.B. = Anchor Bolt
3) B.C. = Bolt Circle of Anchor Bolts
4) If Custom Design, use "NCDOT STANDARD" line for pole I.D. number and Signal Inv. Number.
5) See drawing M4 for mounting positions of I.D. tags.

Identification Tag Details

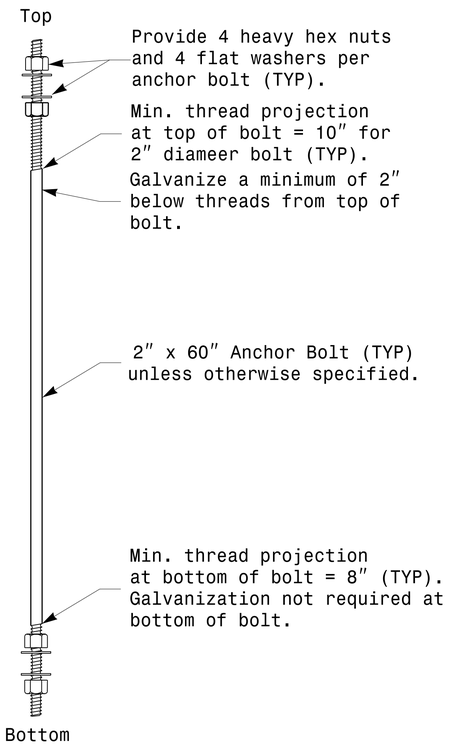

Anchor Bolt Detail

Note: See Strain Pole drawing M3 and Mast arm drawing M4 for base plate weld details.

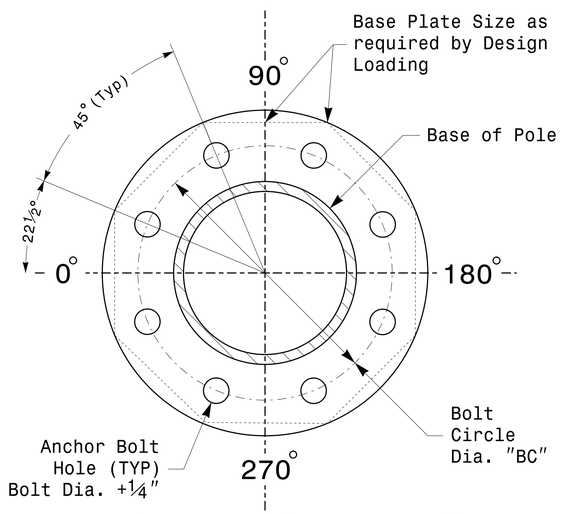

8 Bolt Base Plate Detail

Prepared in the Offices of:
Transportation Mobility and Safety Division
Signal Design Section
750 N.Greenfield Pkwy,Garner,NC 27529

Typical Fabrication Details Common To All Metal Poles

PLAN DATE:	AUGUST 2013	DESIGNED BY:	C.F. ANDREWS
PREPARED BY:	N. BITTING	REVIEWED BY:	D.C. SARKAR

SCALE 0 NA NONE

REVISIONS	INIT.	DATE

SEAL
NORTH CAROLINA PROFESSIONAL SEAL 028094 ENGINEER DEBESH C. SARKAR

DocuSigned by: Debesh C. Sarkar 8/26/2014
44E8E32E147E4C4...
DATE
SIG. INVENTORY NO.

26-AUG-2014 08:55
S:\ITS&SU\ITS Signals\Signal Design Section\Eastern Region\M Sheets\2012_M2_Fab Details All Poles.dgn
jgalloway

PROJECT REFERENCE NO.	SHEET NO.
U-3308	Sig. M3

Fabrication Details – Strain Poles

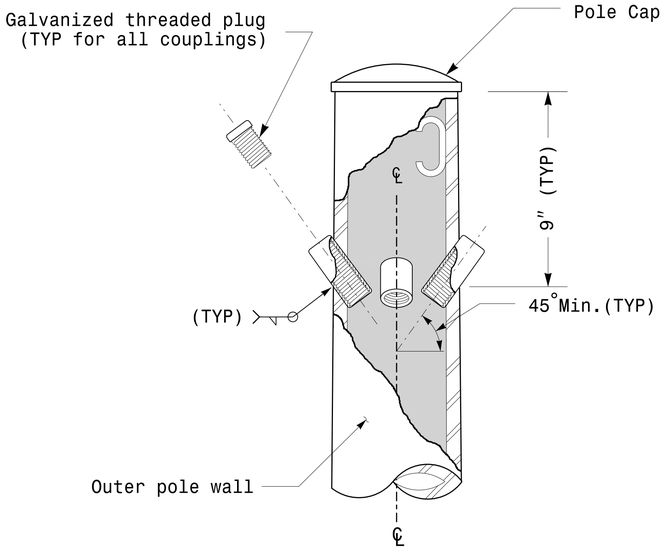

Cable Entrances at Top of Pole

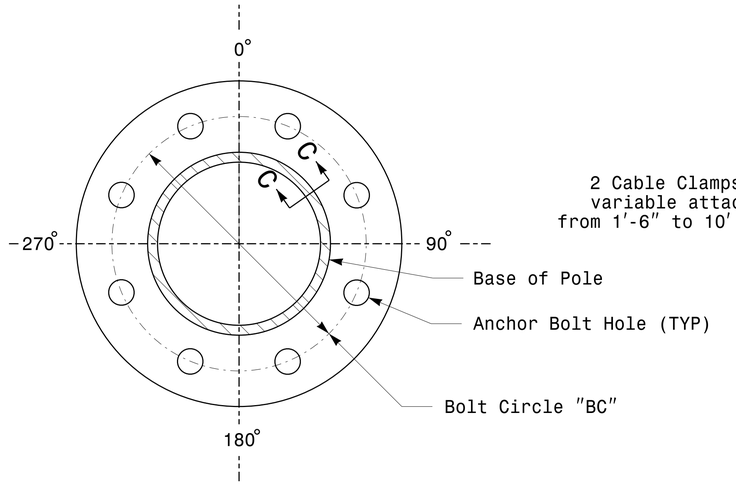

Section B-B

(See drawing M2)

Pole Base Plate

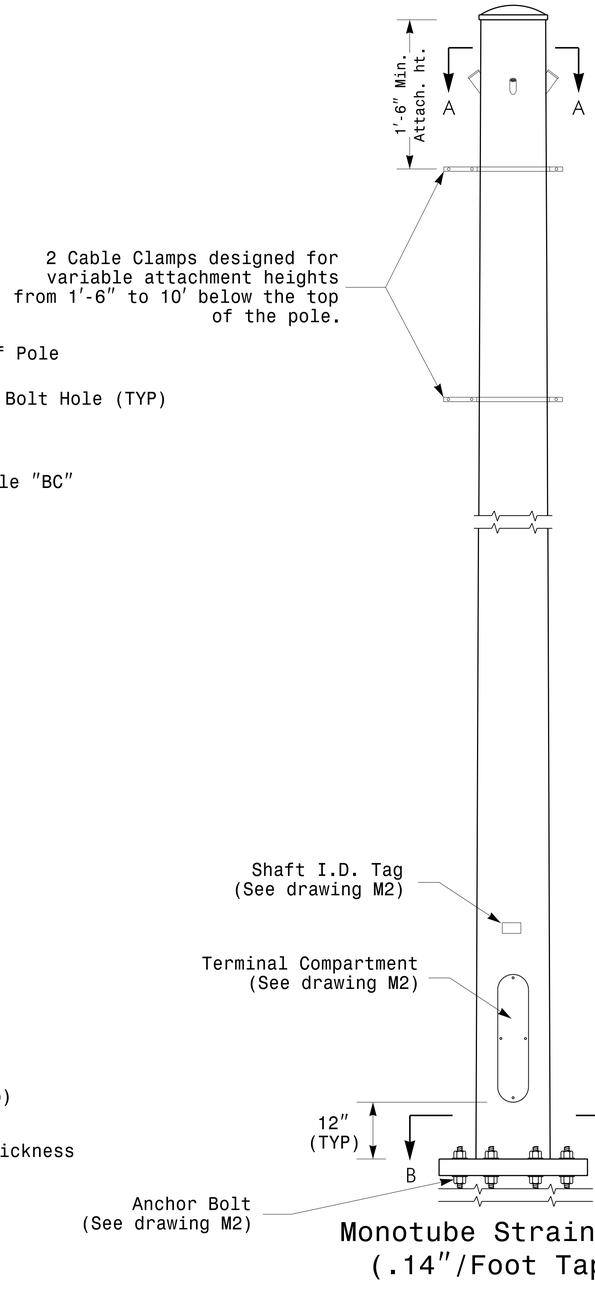

Monotube Strain Pole
(.14"/Foot Taper)

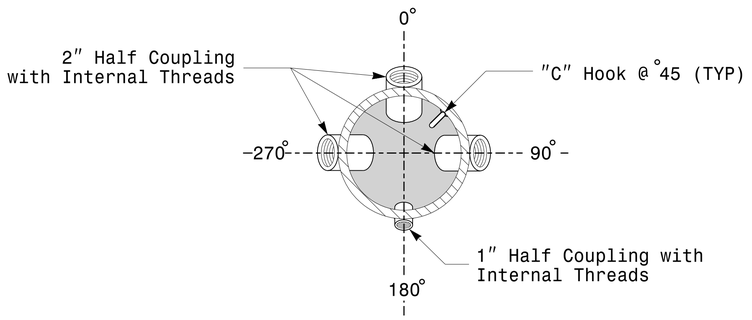

Section A-A

Radial Orientation for Factory Installed Accessories at Top of Pole

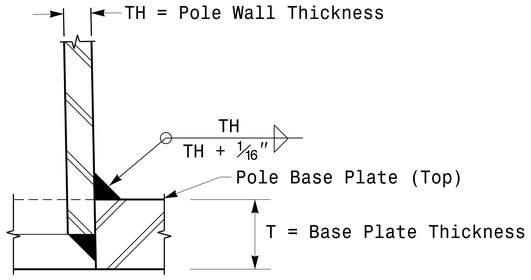

Section C-C

Socket Connection Weld Detail

Prepared In the Offices of:
Transportation Mobility and Safety Division
Signal Design Section
750 N.Greenfield Pkwy.Garner,NC 27529

Typical Fabrication Details
For Strain Poles

PLAN DATE:	AUGUST 2013	DESIGNED BY:	C.F. ANDREWS
PREPARED BY:	N. BITTING	REVIEWED BY:	D.C. SARKAR

SCALE 0 NA NONE

REVISIONS	INIT.	DATE

SEAL
NORTH CAROLINA PROFESSIONAL SEAL 028094 ENGINEER DEBESH C. SARKAR

DocuSigned by: Debesh C. Sarkar 8/26/2014
44E8E32E147E4C4...
DATE

SIG. INVENTORY NO.

26-AUG-2014 08:51
S:\ITS&SU\ITS Signals\Signal Design Section\Eastern Region\M Sheets\2012_M3_Fab Details Strain Poles.dgn
jgalloway

PROJECT REFERENCE NO.	SHEET NO.
U-3308	Sig. M4

Fabrication Details – Mast Arm Poles

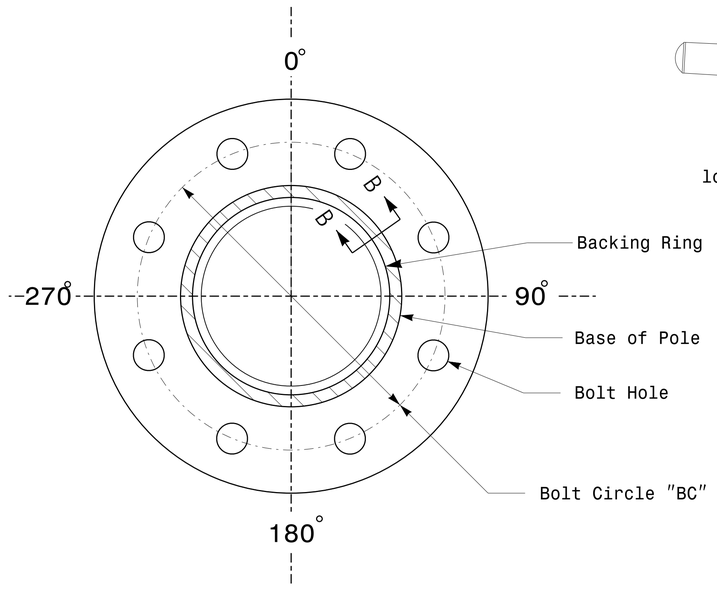

Section A-A

(See drawing M 2)

Pole Base Plate

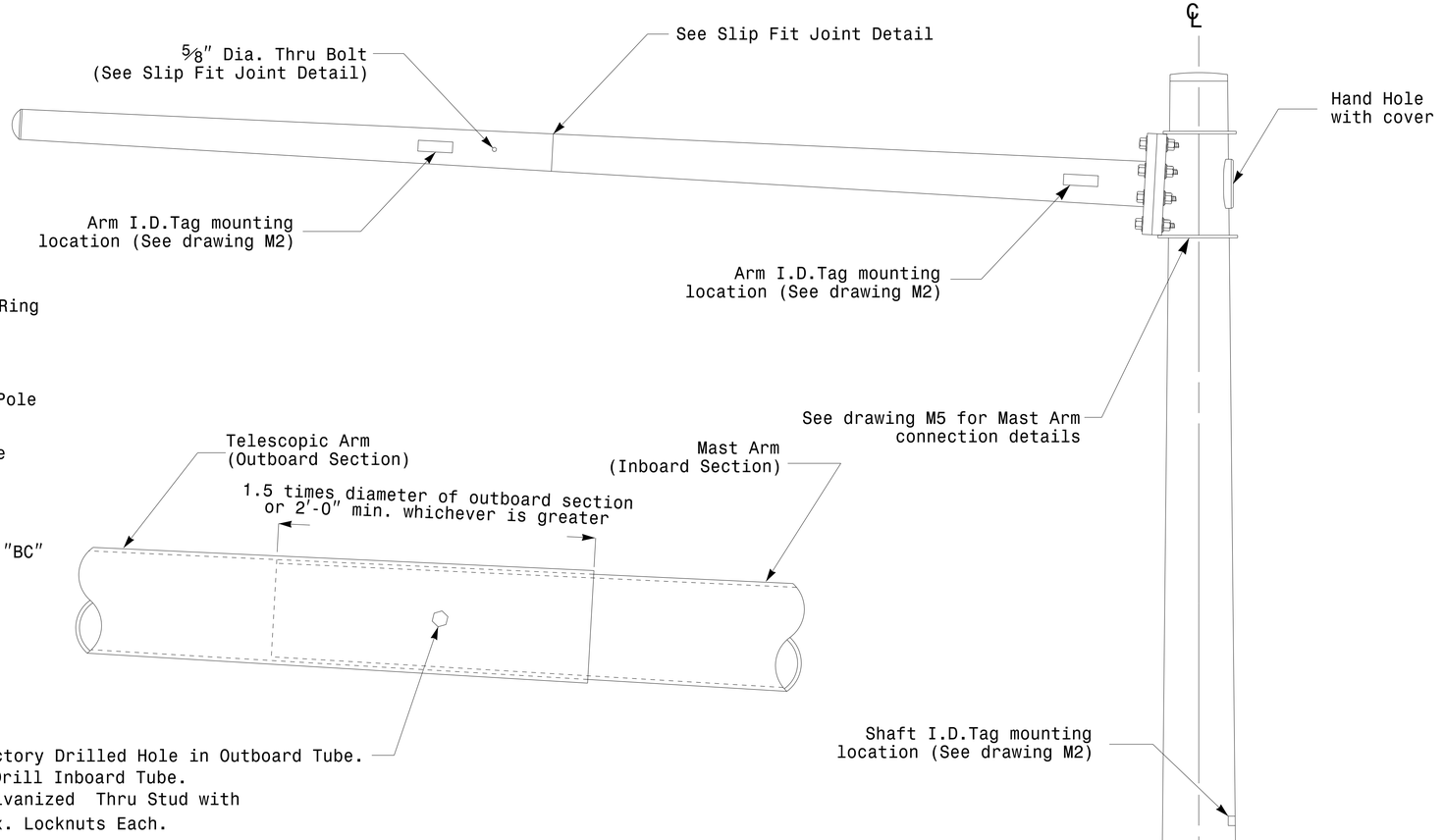

Slip Fit Joint Detail for Mast Arm

Monotube Mast Arm Pole
(.14in./ft. taper)

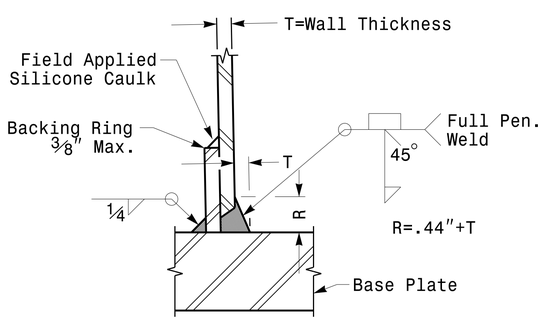

Section B-B

(Pole Attachment to Base Plate)

Full-Penetration Groove Weld Detail

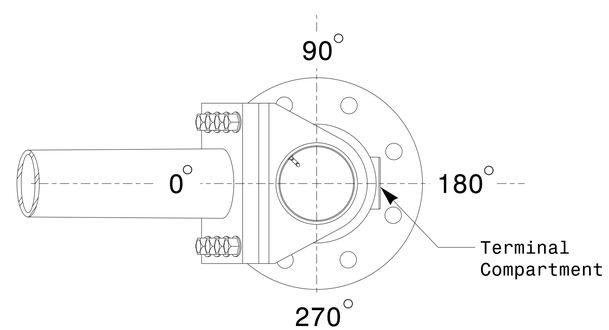

Mast Arm Radial Orientation

Prepared in the Offices of:
Transportation Mobility and Safety Division
STATE OF NORTH CAROLINA
DEPARTMENT OF TRANSPORTATION
Signal Design Section
750 N.Greenfield Pkwy.Garner,NC 27529

Typical Fabrication Details for Mast Arm Poles

PLAN DATE:	AUGUST 2013	DESIGNED BY:	C.F. ANDREWS
PREPARED BY:	N. BITTING	REVIEWED BY:	D.C. SARKAR

SCALE 0 NA NONE

REVISIONS	INIT.	DATE

SEAL
NORTH CAROLINA PROFESSIONAL SEAL 028094 ENGINEER DEBESH C. SARKAR

DocuSigned by: Debesh C. Sarkar 44E8E32E147E4C4...
8/26/2014
DATE

SIG. INVENTORY NO.

26-AUG-2014 08:50
S:*ITSOU*ITS Signals*Signal Design Section*Eastern Region*M Sheets*2012_M4_Fab Details Mastarms.dgn
jgallaway

PROJECT REFERENCE NO.	SHEET NO.
U-3308	Sig. M5

Welded Ring Stiffened Mast Arm Connection

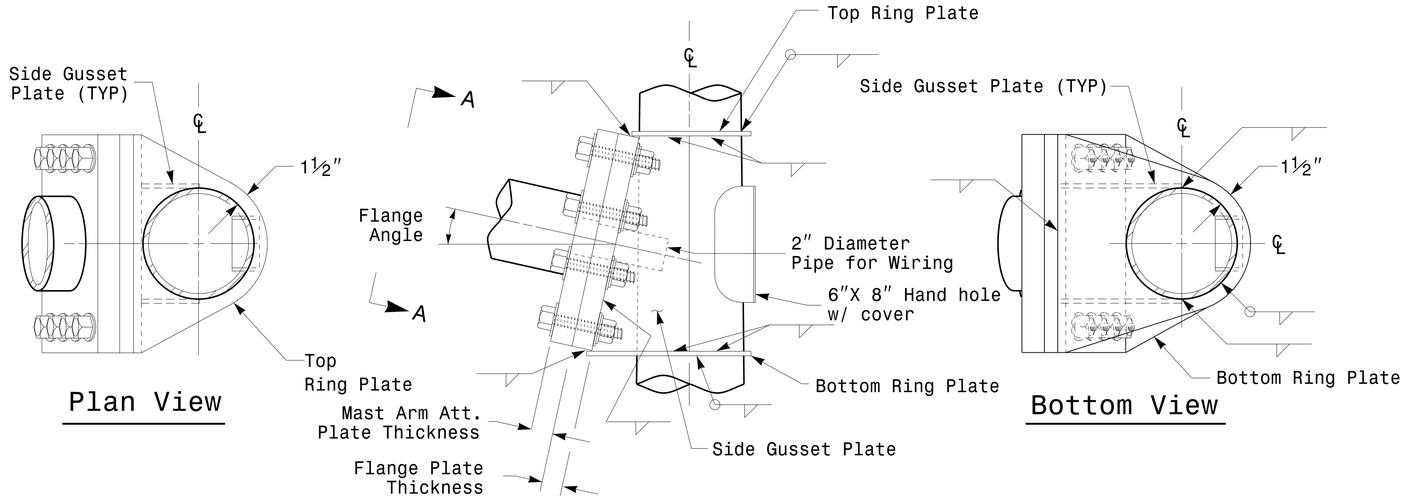

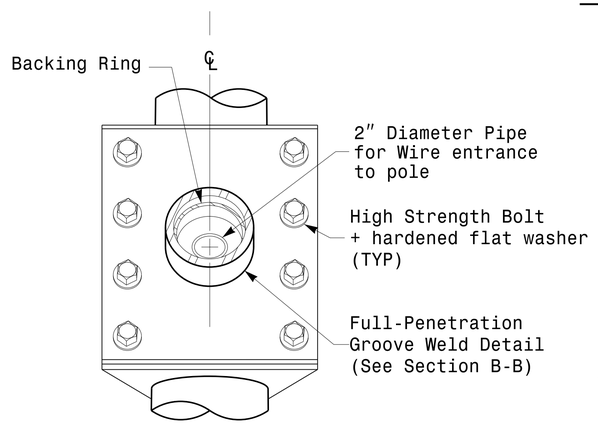

Front Elevation View

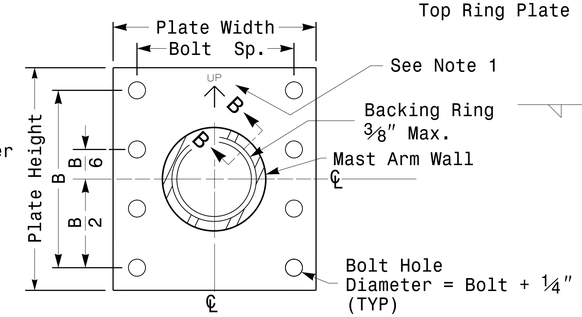

Section View A-A

Mast Arm Attachment Plate

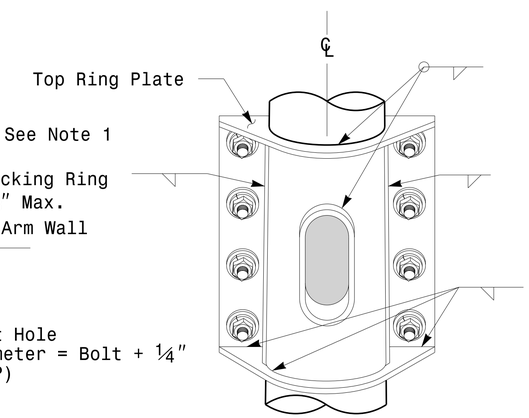

Back Elevation View

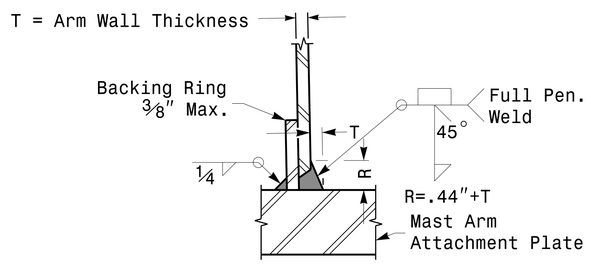

Section B-B

Full-Penetration Groove Weld Detail

Notes:

1. Provide a permanent means of identification above the mast arm to indicate proper attachment orientation of the mast arm.
2. Designer will determine the size of all structural components, plates, fasteners, and welds shown unless they are already specified.
3. Designer is responsible for providing appropriate drainage points.

Fabrication Details – Mast Arm Poles

Prepared In the Offices of:
Transportation Mobility and Safety Division
Signal Design Section
750 N.Greenfield Pkwy,Garner,NC 27529

Fabrication Details For Mast Arm Connection To Pole

PLAN DATE:	AUGUST 2013	DESIGNED BY:	C.F. ANDREWS
PREPARED BY:	N. BITTING	REVIEWED BY:	D.C. SARKAR

SCALE 0 NA NONE

REVISIONS	INIT.	DATE

SEAL
NORTH CAROLINA PROFESSIONAL SEAL 028094 ENGINEER DEBESH C. SARKAR

DocuSigned by: Debesh C. Sarkar 8/26/2014
44E8E32E147E4C4...
DATE

SIG. INVENTORY NO.

26-AUG-2014 08:47
S:\TSGSU\ITS Signals\Signal Design Section\Eastern Region\M Sheets\2012_M5_Fab Details Mastarms.dgn
jgalloway

PROJECT REFERENCE NO.	SHEET NO.
U-3308	Sig. M6

Construction Details – Strain Poles

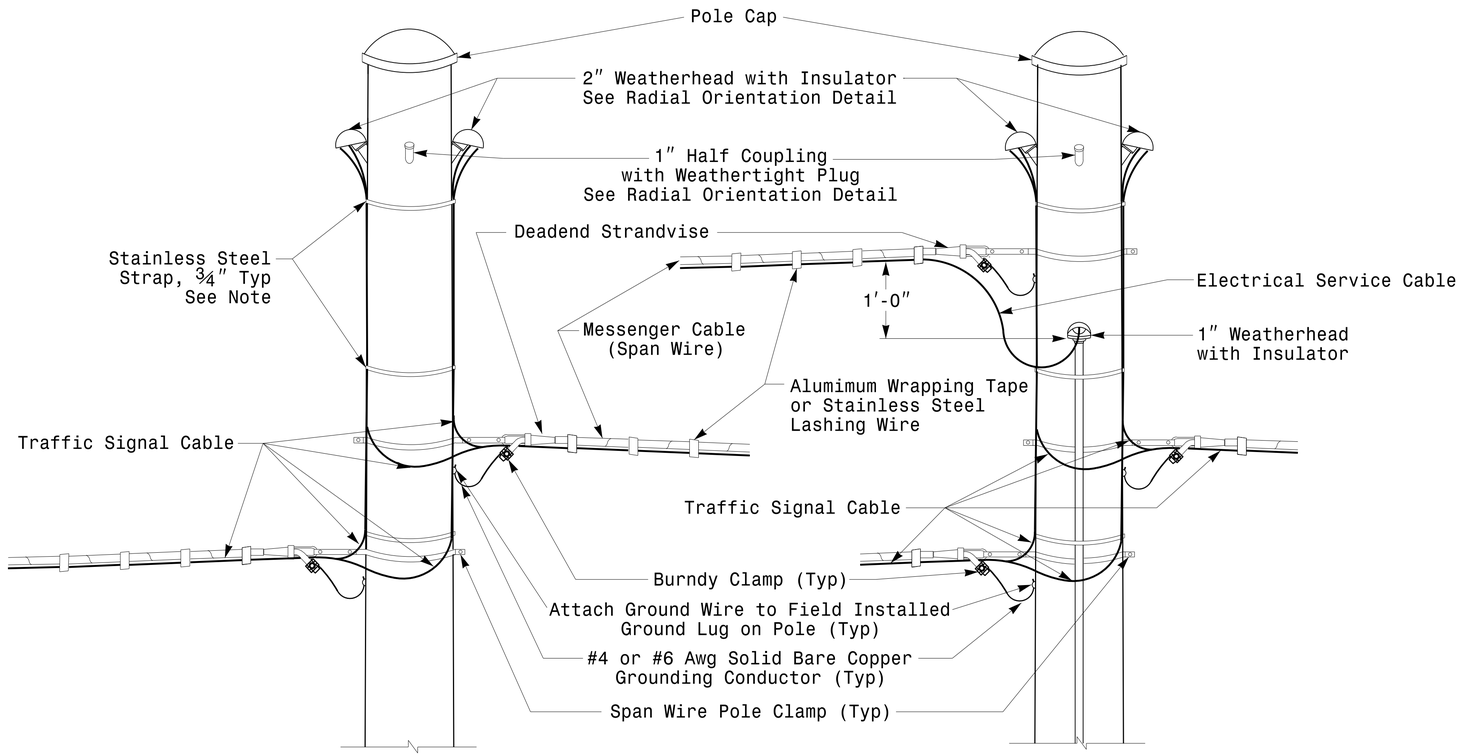

Strain Pole Attachments

Note: Strap all signal cables to the side of the pole with 3/4" stainless steel straps when the distance between the spanwire attachment clamp and the weatherheads exceeds 36"

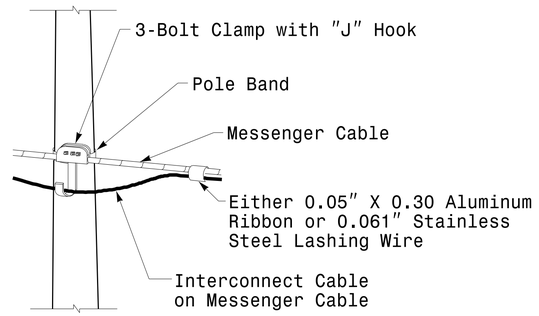

Attachment of Cable to Intermediate Metal Pole

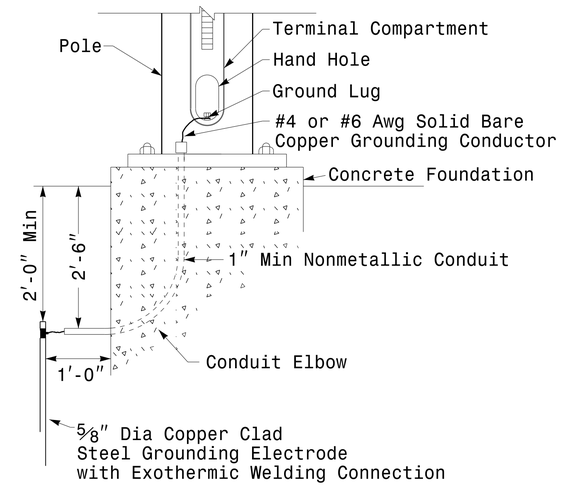

Metal Pole Grounding Detail

Prepared In the Offices of:
Transportation Mobility and Safety Division
State of North Carolina
Department of Transportation
Signal Design Section
750 N.Greenfield Pkwy,Garner,NC 27529

Construction Details
Strain Poles

PLAN DATE:	AUGUST 2013	REVIEWED BY:	C.F. ANDREWS
PREPARED BY:	N. BITTING	REVIEWED BY:	D.C. SARKAR

SCALE
0 NA
NONE

REVISIONS	INIT.	DATE

SEAL
NORTH CAROLINA PROFESSIONAL SEAL 028094 ENGINEER DEBESH C. SARKAR

DocuSigned by:
Debesh C. Sarkar
44E8E32E147E4C4...
8/26/2014
DATE

SIG. INVENTORY NO.

26-AUG-2014 08:45
S:\ITSCAD\ITS Signals\Signal Design Section\Eastern Region\M Sheets\2012_M6_Con Details Strain Poles.dgn
jgalloway

PROJECT REFERENCE NO.	SHEET NO.
U-3308	Sig. M7

Construction Details – Foundations

Reinforcing Steel Bars

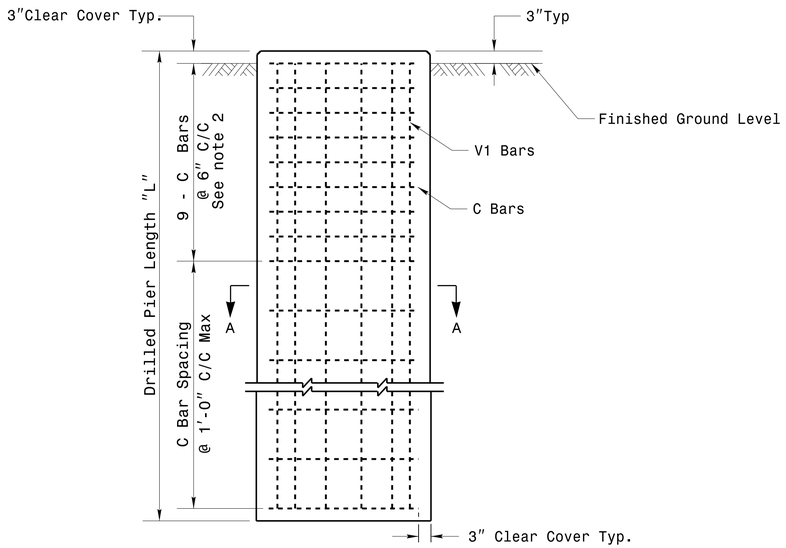

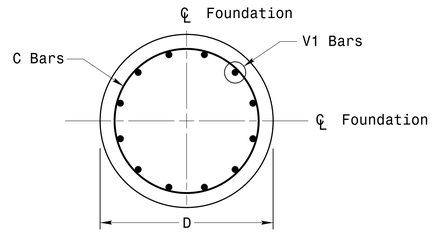

Section A-A

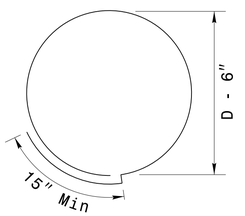

Typical "C" Bars

REINFORCING STEEL TABLE FOR STANDARD DRILL PIER SHAFT (4'–0" DIAMETER)						
Shaft Dia (in.)	Conc. Volume (cu. yds.)	Bar Name	MIN.	Size	Type	Length
48"	.465 x L	V1	***	#8	STR.	**
		C	*	#4	CIR.	12'-6"

* See Note No. 1
** See Note No. 3
*** See Note No. 4

Typical Foundation Anchor Bolt Details

(Reinforcing Cage Not Shown for Clarity)

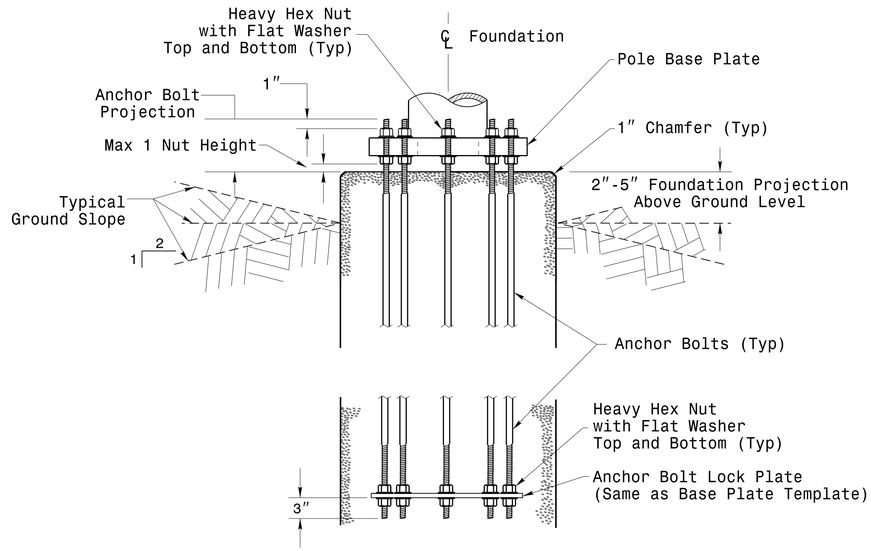

Typical Foundation Conduit Details

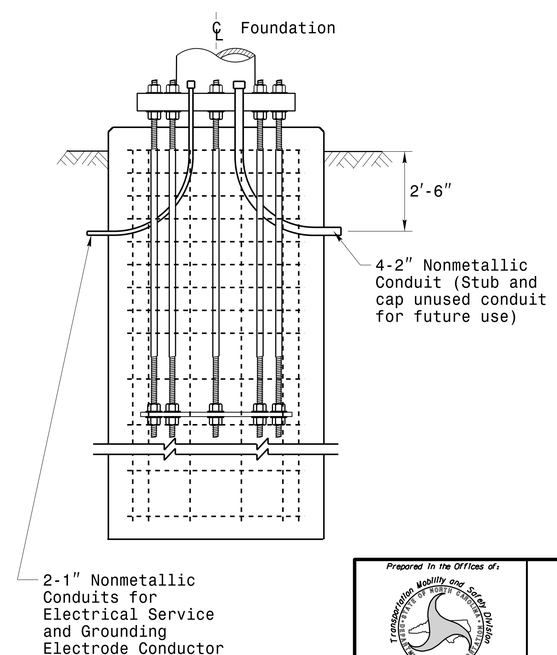

Notes

1. The number of C-bars is based on foundation depth and/or as required. For standard foundations, see sheets M 8 and M 9 for details.
2. Circular tie reinforcing rings may be vertically adjusted by +/- 3" at a depth between 2'-0" and 3'-0" to facilitate the installation of electrical conduit entering in the cage.
3. The length of V1-bars is based on foundation depth. For standard foundations, see sheets M 8 and M 9 for details. Vertical reinforcing bars (V1) may be horizontally adjusted by +/-3"to facilitate the installation of electrical conduit entering into the cage.
4. Provide vertical reinforcement as required per design. See sheets M 8 and M9 for details.

Prepared In the Offices of:
Transportation Mobility and Safety Division
Signal Design Section
750 N.Greenfield Pkwy,Garner,NC 27529

Construction Details
Foundations

PLAN DATE:	AUGUST 2013	DESIGNED BY:	K.C. DURIGON
PREPARED BY:	N. BITTING	REVIEWED BY:	D.C. SARKAR

SCALE
0 NA
NONE

REVISIONS	INIT.	DATE

SEAL
NORTH CAROLINA PROFESSIONAL SEAL 028094 ENGINEER DEBESH C. SARKAR

DocuSigned by:
Debesh C. Sarkar
44EBE32E147E4C4...
8/26/2014
DATE

SIG. INVENTORY NO.

26-AUG-2014 08:44
S:*ITS&SU*ITS Signals*Signal Design Section*Eastern Region*M Sheets*2012_M7_Con Details Foundations.dgn
jgalloway

SATURATED SOIL CONDITION

PROJECT REFERENCE NO.	SHEET NO.
U-3308	Sig. M8

		STANDARD STRAIN POLES						STANDARD FOUNDATIONS 48" Diameter Drilled Pier Length (L) – Feet							Reinforcement			
					Reactions at the Pole Base			Clay				Sand			Longitudinal		Stirrups	
		Case No.	Pole Height (Ft.)	Base Plate BC (In.)	Axial (kip)	Shear (kip)	Moment (ft-kip)	Medium N-Value 4-8	Stiff N-Value 9-15	Very Stiff N-Value 16-30	Hard N-Value >30	Loose N-Value 4-10	Medium N-Value 11-30	Dense N-Value >30	Bar Size (#)	Quantity	Bar Size (#)	Spacing (in.)
WIND ZONE 1	LIGHT	S26L3	26	25	2	11	270	19	13	9	8	17	14.5	12.5	8	13	4	12
		S30L3	30	25	2	11	300	20	13.5	9	8	17.5	15	13	8	14	4	12
		S35L3	35	25	3	11	320	20	13.5	9.5	8	17.5	15	13	8	15	4	12
	HEAVY	S30H3	30	29	3	16	450	24.5	17	13	11	21	17.5	15	8	18	4	12
		S35H3	35	29	4	16	515	26	17.5	12	8.5	22	18.5	16	8	20	4	12
WIND ZONE 2	LIGHT	S26L2	26	23	2	10	245	18	12.5	8.5	8	16.5	14	12	8	13	4	12
		S30L2	30	23	2	10	270	19	12.5	9	8	16.5	14	12.5	8	13	4	12
		S35L2	35	23	3	10	300	19.5	13	9	8	17	14.5	13	8	14	4	12
	HEAVY	S30H2	30	29	3	15	415	25.5	15.5	11	8	20	17	14.5	8	17	4	12
		S35H2	35	29	4	15	475	25	16.5	11.5	8	21	17.5	15.5	8	19	4	12
WIND ZONE 3	LIGHT	S26L2	26	23	2	10	245	18	12.5	8.5	8	16.5	14	12	8	13	4	12
		S30L2	30	23	2	10	270	19	12.5	9	8	16.5	14	12.5	8	13	4	12
		S35L2	35	23	3	10	300	19.5	13	9	8	17	14.5	13	8	14	4	12
	HEAVY	S30H2	30	29	3	15	415	25.5	15.5	11	8	20	17	14.5	8	17	4	12
		S35H2	35	29	4	15	475	25	16.5	11.5	8	21	17.5	15.5	8	19	4	12
WIND ZONE 4	LIGHT	S26L1	26	22	2	8	190	16	11	8	8	15	12.5	11	8	12	4	12
		S30L1	30	22	2	8	205	16.5	11.5	8	8	15	13	11.5	8	12	4	12
		S35L1	35	22	3	8	230	17	12	8	8	15.5	13.5	11.5	8	12	4	12
	HEAVY	S30H1	30	25	3	12	320	20.5	14	9.5	8	18	15	13.5	8	15	4	12
		S35H1	35	25	4	12	350	21	14.5	10	8	18.5	15.5	13.5	8	16	4	12
WIND ZONE 5	LIGHT	S26L2	26	23	2	10	245	18	12.5	8.5	8	16.5	14	12	8	13	4	12
		S30L2	30	23	2	10	270	19	12.5	9	8	16.5	14	12.5	8	13	4	12
		S35L2	35	23	3	10	300	19.5	13	9	8	17	14.5	13	8	14	4	12
	HEAVY	S30H2	30	29	3	15	415	25.5	15.5	11	8	20	17	14.5	8	17	4	12
		S35H2	35	29	4	15	475	25	16.5	11.5	8	21	17.5	15.5	8	19	4	12

48" Dia. Foundations Concrete Volume (cubic yards) = (0.465) x Foundation Depth

Fabrication Design Notes:

1. Values shown in the "Reactions at the Pole Base" column represent the minimum acceptable capacity allowed for design using a design CSR of 1.00.
2. Min. base plate thickness (T) is 2.0 inches.

Foundation Selection:

1. Perform a standard penetration test at each proposed foundation site to determine "N" value.
2. Select the appropriate wind zone from M 1 drawing.
3. Select the soil type (Clay or Sand) that best describes the soil characteristics.
4. Get the appropriate standard pole case number from the plans or from the Engineer.
5. Select the appropriate column in the chart based on soil type and "N" value. Select the appropriate row based on the pole load case.
   The foundation depth is the value where the column and the row intersect.
6. Reference Drilled Shafts: Construction Procedures and Design Methods, FHWA -IF-99-025

S30H1 - Hard Clay-Stirrup Spacing: 6 in. c/c
S30H2 - Hard Clay-Stirrup Spacing: 6 in. c/c
S30H3 - Hard Clay-Stirrup Spacing: 6 in. c/c
- Dense Sand-Stirrup Spacing: 6 in. c/c
S35H1 - Hard Clay - Stirrup Spacing: 6 in. c/c
S35H2 - Very Stiff Clay-Stirrup Spacing: 6 in. c/c
- Hard Clay- Stirrup Spacing: 6 in. c/c
- Dense Sand- Stirrup Spacing: 6 in. c/c
S35H3 - Very Stiff Clay-Stirrup Spacing: 6 in. c/c
- Dense Sand-Stirrup Spacing: 6 in. c/c

Standard Strain Pole Foundation–Saturated Soil Condition

Prepared in the Offices of:
Transportation Mobility and Safety Division
NORTH CAROLINA DEPARTMENT OF TRANSPORTATION
Signal Design Section
750 N.Greenfield Pkwy.Garner,NC 27529

Standard Strain Pole Foundation for Saturated Soil Condition

PLAN DATE: SEPTEMBER 2013 | DESIGNED BY: C.B COGDELL
PREPARED BY: N. BITTING | REVIEWED BY: D. SARKAR

SCALE: 0 NA None

REVISIONS	INIT.	DATE

SEAL
NORTH CAROLINA
PROFESSIONAL
SEAL 028094
ENGINEER
DEBDESH C. SARKAR

DocuSigned by: Debdesh C. Sarkar 8/26/2014
44E8E32E147E4C4...
DATE

26-AUG-2014 08:49
S:\PLANS\Traffic\Signals\Signal Design Section\Eastern Region\MM Sheets\2012_M8_Standard Foundations Wet.dgn
jgalloway