PROJECT REFERENCE NO.	SHEET NO.
U-3308	SCP.9

FIBER OPTIC CABLE

Aerial Splice Enclosure #1
Vicinity of:
NC 55 (S Alston St)
at NC 147 Southbound Ramps

Notes:

Unused fibers left coiled and stored in splice tray.
Unused Buffer Tubes left coiled and stored in splice tray.

COLOR CODE
TIA/EIA 598-A

(1) BLUE	(7) RED
(2) ORANGE	(8) BLACK
(3) GREEN	(9) YELLOW
(4) BROWN	(10) VIOLET
(5) SLATE	(11) ROSE
(6) WHITE	(12) AQUA

LEGEND

X – FUSION SPLICE INDIVIDUAL FIBER
C – CAP AND SEAL SPLICE INDIVIDUAL FIBER
E – EXISTING SPLICE

SPLICE — SPLICE ALL INDIVIDUAL FIBERS AS NOTED

EXPRESS — EXPRESS ENTIRE BUFFER TUBE AS NOTED

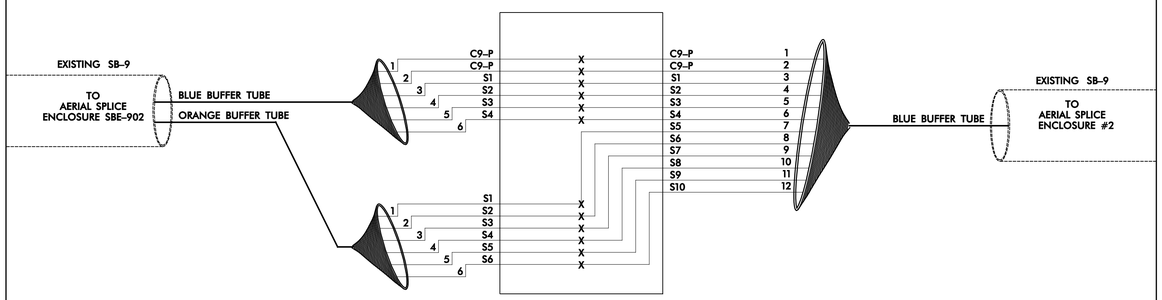

NO WORK REQUIRED AT THIS LOCATION.
FOR INFORMATION PURPOSES ONLY.

INCLUDE ON THE COVER OF EACH SPLICE TRAY THE FOLLOWING:
REFERENCE SECTION 1731 "FIBER OPTIC SPLICE ENCLOSURE"

1) SPLICE LOCATION
2) DATE
3) COMPANY NAME
4) NAME OF INDIVIDUAL PERFORMING THE SPLICING

PRIOR TO INSTALLING THE COVER ON THE SPLICE TRAY TAKE A DIGITAL PHOTOGRAPH SHOWING THE SPICE TRAY AND INFORMATION SHOWN ABOVE (1–4) AND SUBMIT PHOTOGRAPH ALONG WITH OTDR TEST RESULTS.

FIBER OPTIC CABLE

Aerial Splice Enclosure #2
Vicinity of:
NC 55 (S Alston St)
at NC 147 Southbound Ramps

Notes:

Unused fibers left coiled and stored in splice tray.
Unused Buffer Tubes left coiled and stored in splice tray.

COLOR CODE
TIA/EIA 598-A

(1) BLUE	(7) RED
(2) ORANGE	(8) BLACK
(3) GREEN	(9) YELLOW
(4) BROWN	(10) VIOLET
(5) SLATE	(11) ROSE
(6) WHITE	(12) AQUA

LEGEND

X – FUSION SPLICE INDIVIDUAL FIBER
C – CAP AND SEAL SPLICE INDIVIDUAL FIBER
E – EXISTING SPLICE

SPLICE — SPLICE ALL INDIVIDUAL FIBERS AS NOTED

EXPRESS — EXPRESS ENTIRE BUFFER TUBE AS NOTED

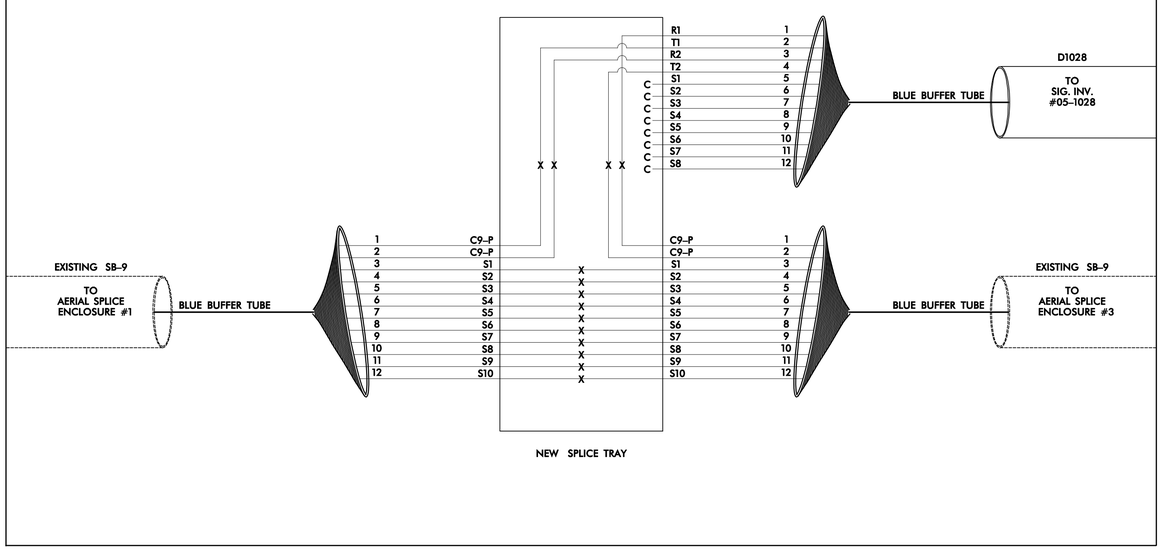

NC 55 (S Alston Ave) at
NC 147 SB Ramps
SIG. INV. #05-1028

Notes:

Unused fibers left coiled and stored in splice tray.
Unused Buffer Tubes left coiled and stored in splice tray.

LEGEND
X = FUSION SPLICE

COLOR CODE
TIA/EIA 598-A

(1) BLUE	(7) RED
(2) ORANGE	(8) BLACK
(3) GREEN	(9) YELLOW
(4) BROWN	(10) VIOLET
(5) SLATE	(11) ROSE
(6) WHITE	(12) AQUA

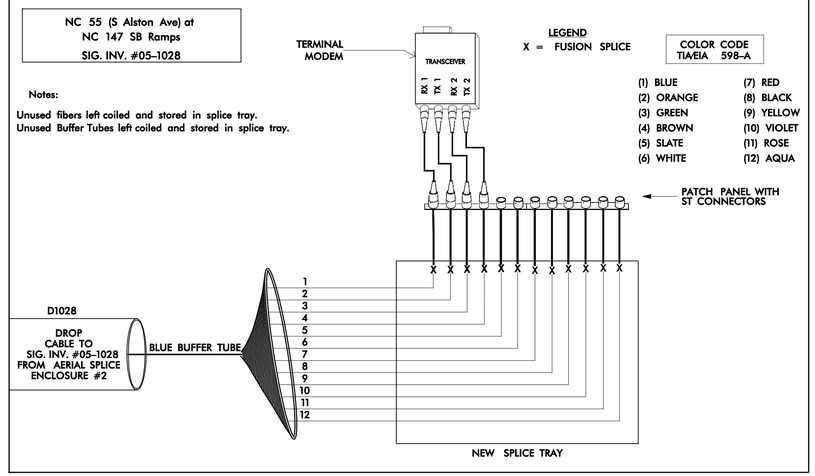

SEPI
ENGINEERING & CONSTRUCTION
1025 Wade Avenue
Raleigh, NC 27605
Tel:919-789-9977
Fax:919-789-9591
License #: C-2197

Prepared for the Offices of:
Transportation Mobility and Safety Division
STATE OF NORTH CAROLINA DEPARTMENT OF TRANSPORTATION
Signal Design Section
750 N.Greenfield Pkwy,Garner,NC 27529

SCALE
0
NTS

NC 55 (ALSTON AVE.) SPLICE DETAILS

Division 5 Durham County Durham

PLAN DATE:	November 2014	REVIEWED BY:	J Hochanadel
PREPARED BY:	J Kopaskie	REVIEWED BY:	

REVISIONS	INIT.	DATE

SEAL

NORTH CAROLINA PROFESSIONAL SEAL 28430 ENGINEER JEFFREY W. HOCHANADEL

DocuSigned by:
5078102BF8C486...
12/22/2014
SIGNATURE DATE

CADD Filename: -

12/17/2014
G:\Traffic\Signal\Installation\TR13.017.00 NCDOT 2012 Traffic LSA\TR13.017.03 (U-3308 Signals)\Traffic\Cable Routing\TIP U-3308 CABLE ROUTING PLANS\SCP9 thru SCP18.dgn
jkopaskie