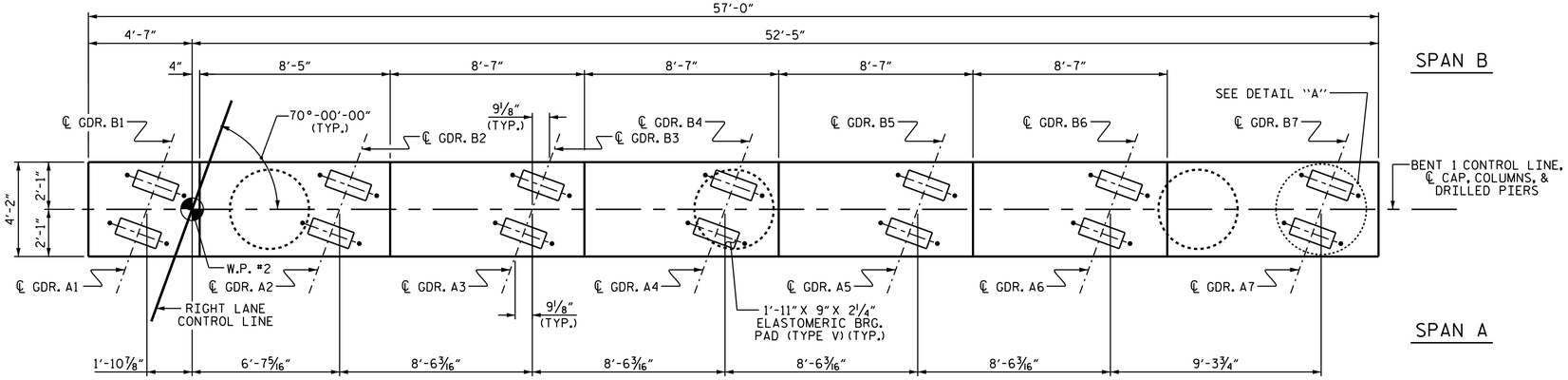

PLAN

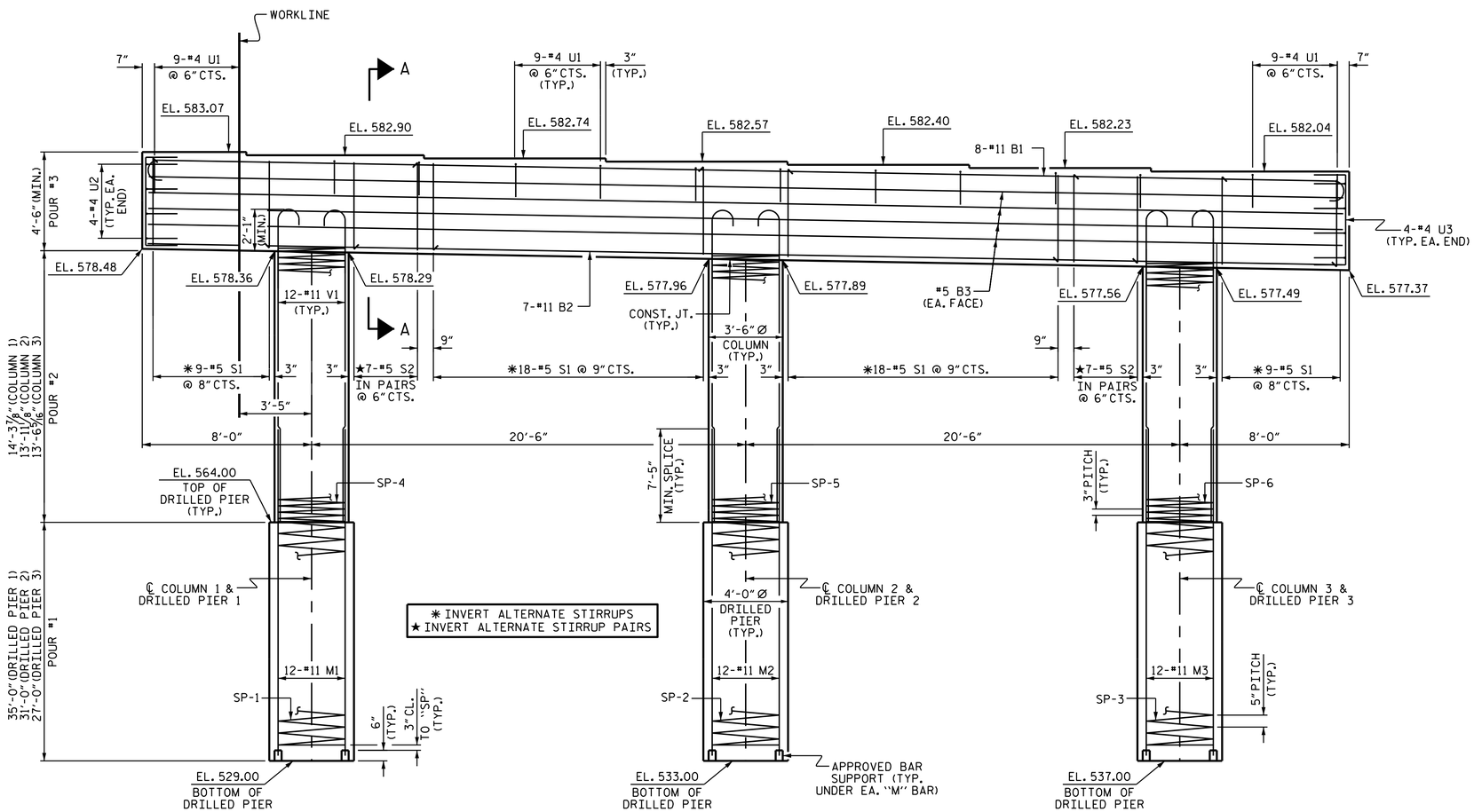

ELEVATION

NOTES

STIRRUPS AND "U" BARS IN CAP MAY BE SHIFTED AS NECESSARY TO CLEAR ANCHOR BOLTS.

HOOKS ON "V" BARS MAY BE TURNED AS NECESSARY FOR PLACING REINFORCING STEEL.

ALL STEEL IN THE DRILLED PIERS IS INCLUDED IN THE PAY ITEMS FOR "REINFORCING STEEL" AND "SPIRAL COLUMN REINFORCING STEEL".

THE LOCATION OF THE CONSTRUCTION JOINT IN THE DRILLED PIERS IS BASED ON AN APPROXIMATE GROUND LINE ELEVATION. IF THE CONSTRUCTION JOINT IS ABOVE THE ACTUAL GROUND LINE ELEVATION, THE CONTRACTOR SHALL PLACE THE CONSTRUCTION JOINT 1 FT. BELOW THE GROUND LINE.

FOR DRILLED PIERS, SEE GEOTECHNICAL SPECIAL PROVISIONS AND SECTION 411 OF THE STANDARD SPECIFICATIONS.

THE CONTRACTOR'S ATTENTION IS CALLED TO THE FACT THAT THE LONGITUDINAL REINFORCEMENT FOR THE DRILLED PIERS IS DETAILED WITH 3 FEET OF EXTRA LENGTH.

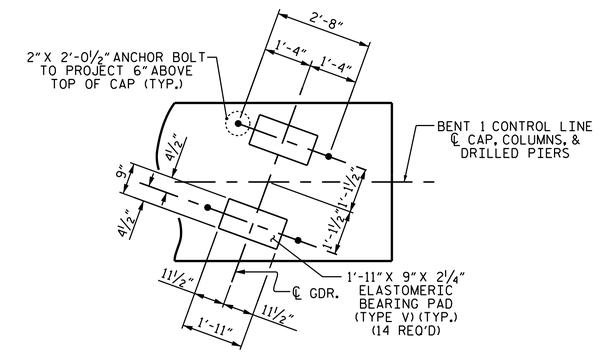

DETAIL "A"

DIMENSIONS ARE TYPICAL FOR EACH BEARING

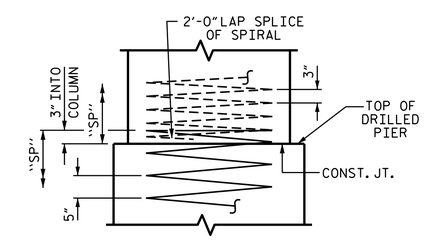

CONSTRUCTION JOINT DETAIL

PROJECT NO. B-5123

CABARRUS COUNTY

STATION: 21+44.10 -L-

SHEET 1 OF 2

STATE OF NORTH CAROLINA
DEPARTMENT OF TRANSPORTATION
RALEIGH

SUBSTRUCTURE

BENT 1

(RIGHT LANE)

NORTH CAROLINA PROFESSIONAL SEAL 23371 ENGINEER VIPUL A. PATEL

DocuSigned by: vipul a patel 1C157DE15D464AA...
3/1/2016

DRAWN BY : J.K. BOWLES DATE : 11/9/15
CHECKED BY : N. D'AIUTO DATE : 11/10/15
DESIGN ENGINEER OF RECORD: T.H. CARROLL DATE : 12/7/15

01-MAR-2016 10:56
R:\Structures\Plans\Str02\B-5123_SD_B*_02.dgn
ndaluto

DOCUMENT NOT CONSIDERED FINAL UNLESS ALL SIGNATURES COMPLETED

REVISIONS						SHEET NO.
NO.	BY:	DATE:	NO.	BY:	DATE:	S-66
1			3			TOTAL SHEETS
2			4			74

STR. #2