NOTES

PROVIDE 1¼" HIGH BEAM BOLSTERS UPPER AT 4'-0" CTS. ATOP THE METAL STAY-IN-PLACE FORMS TO SUPPORT THE BOTTOM MAT OF 'A' BARS. WHEN USING REMOVABLE FORMS, PROVIDE CONTINUOUS HIGH CHAIRS FOR METAL DECK (C.H.C.M.) @ 4'-0" CTS. WITH A HEIGHT TO SUPPORT THE BOTTOM MAT OF 'A' BARS A CLEAR DISTANCE OF 2½" ABOVE THE TOP OF THE REMOVABLE FORM.

LONGITUDINAL STEEL MAY BE SHIFTED SLIGHTLY, AS NECESSARY, TO AVOID INTERFERENCE WITH STIRRUPS IN PRESTRESSED CONCRETE GIRDERS.

PREVIOUSLY CAST CONCRETE IN A CONTINUOUS UNIT SHALL HAVE ATTAINED A MINIMUM COMPRESSIVE STRENGTH OF 3,000 PSI BEFORE ADDITIONAL CONCRETE IS CAST IN THE UNIT.

FOR WING ELEVATIONS AND DETAILS, SEE "PLAN OF SPAN DETAILS" SHEETS.

✳ FOR INTERMEDIATE STEEL DIAPHRAGM DETAILS, SEE "INTERMEDIATE STEEL DIAPHRAGMS FOR 63" MODIFIED BULB TEE PRESTRESSED CONCRETE GIRDERS" SHEET.

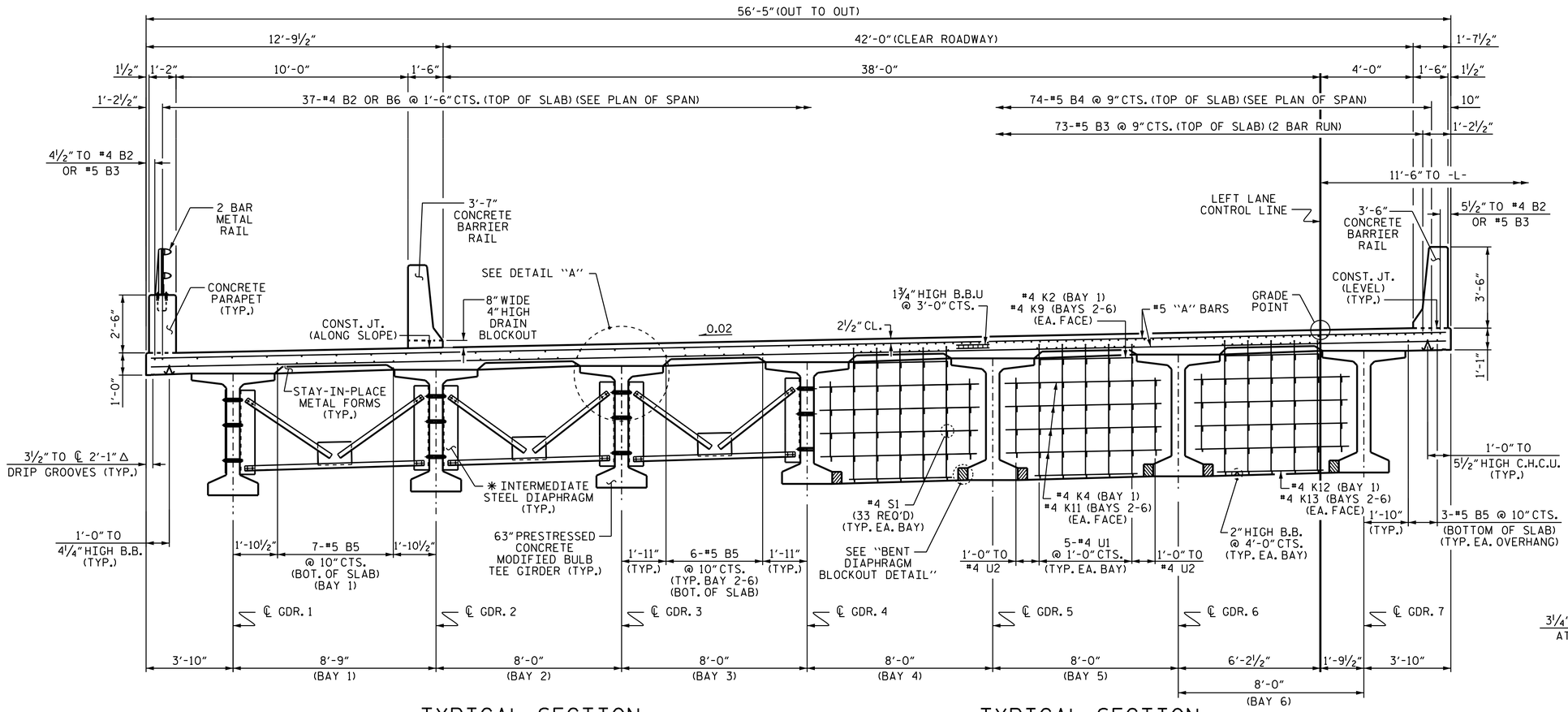

TYPICAL SECTION
(SHOWING INTERMEDIATE DIAPHRAGMS)

TYPICAL SECTION
(SHOWING BENT DIAPHRAGMS)

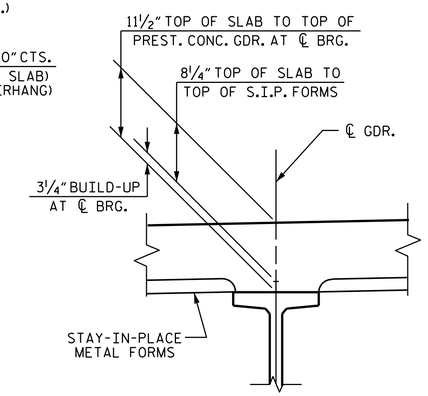

DETAIL "A"

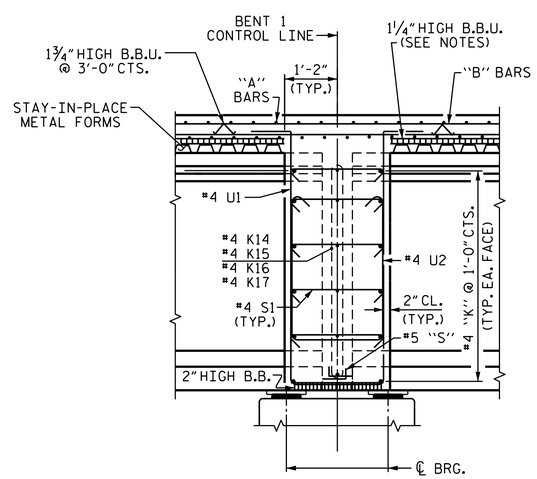

SECTION THROUGH BENT DIAPHRAGM

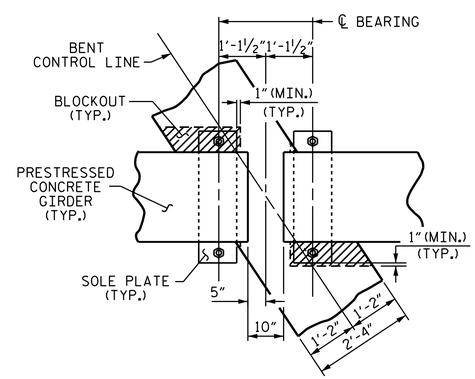

BENT DIAPHRAGM BLOCKOUT DETAIL

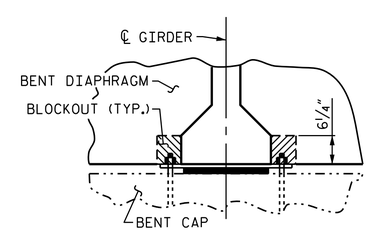

PROJECT NO. B-5123
CABARRUS COUNTY
STATION: 21+44.10 -L-

SHEET 1 OF 2

STATE OF NORTH CAROLINA
DEPARTMENT OF TRANSPORTATION
RALEIGH

SUPERSTRUCTURE
TYPICAL SECTION
(LEFT LANE)

NORTH CAROLINA PROFESSIONAL SEAL 23371 ENGINEER VIPUL A. PATEL
DocuSigned by: vipul a patel 1C157DE15D464AA...
3/1/2016

REVISIONS								
NO.	BY:	DATE:	NO.	BY:	DATE:		SHEET NO.	
1			3				S-5	
2			4				TOTAL SHEETS	
							74	

DRAWN BY : N.D'AIUTO DATE : 6/16/15
CHECKED BY : K.D.LAYNE DATE : 8/7/15
DESIGN ENGINEER OF RECORD: T.H.CARROLL DATE : 12/7/15

DOCUMENT NOT CONSIDERED FINAL UNLESS ALL SIGNATURES COMPLETED

STR. #1

01-MAR-2016 10:51
R:\Structures\Plans\Str01\B5123_SD_TS_01.dgn
ndaluto