PROJECT REFERENCE NO.	SHEET NO.
B-5123	2C-4

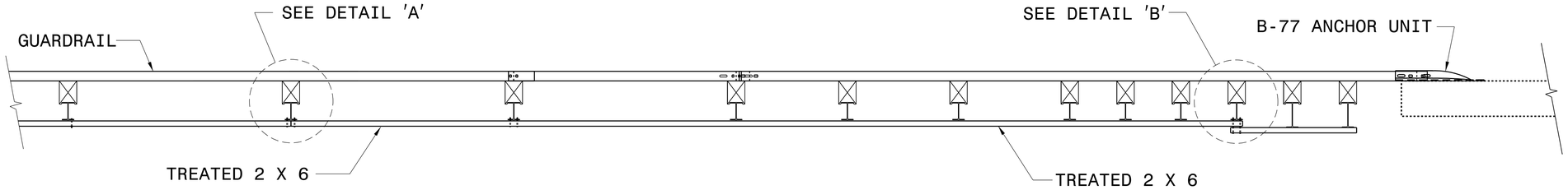

PLAN

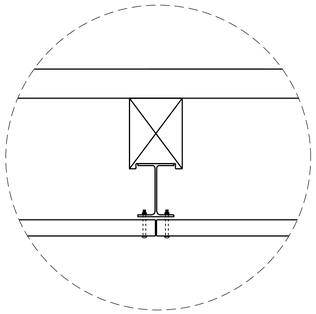

DETAIL 'A'

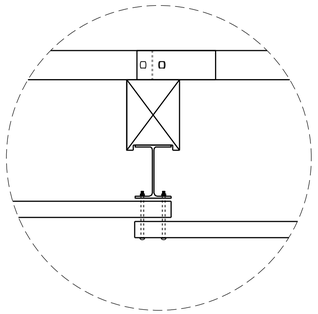

DETAIL 'B'

NOTES:

1. USE #2 SYP TREATED 2 X 6 FOR WOOD RAIL.
2. USE GUARDRAIL BOLTS TO FASTEN WOOD RAIL TO GUARDRAIL POSTS. SEE ROADWAY STD.NO.862.02.
3. THE MOUNTING HEIGHT OF THE WOODRAIL TO BE DETERMINED IN THE FIELD.
4. PLACE THE TREATED 2 X 6 WOODRAIL AS DIRECTED BY THE ENGINEER.

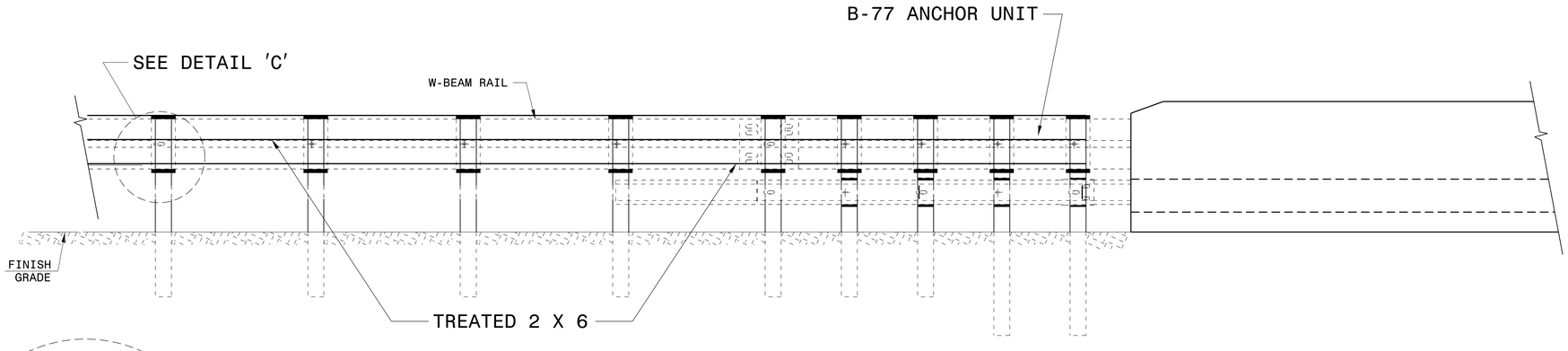

ELEVATION

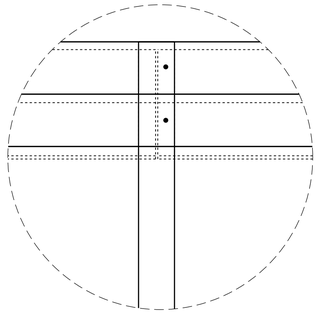

DETAIL 'C'

2/4/2016

DOCUMENT NOT CONSIDERED FINAL UNLESS ALL SIGNATURES COMPLETED

CONTRACT STANDARDS AND DEVELOPMENT UNIT
PLANS AND STANDARDS SECTION
Office 919-707-6950 FAX 919-250-4119

DETAIL OF WOOD RUB RAIL

ORIGINAL BY:	STD.862	DATE:	1-25-12
MODIFIED BY:	rnbritt	DATE:	02-03-2016
CHECKED BY:		DATE:	
FILE SPEC.:	details/nbritt/english/bridge/b5123 sidewalk approach.dgn		

$$$$SYSTEM$$$$
$$$$USERNAME$$$$ DGN$$$$$$$$$$$$$$$$$$$$