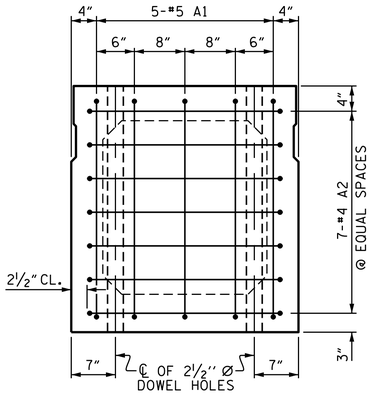

END ELEVATION

SHOWING PLACEMENT OF #5 & #4 "A" BARS AND LOCATION OF DOWEL HOLES. (INTERIOR BOX BEAM SECTION SHOWN-EXTERIOR SECTION SIMILAR EXCEPT SHEAR KEY LOCATION. STRAND LAYOUT NOT SHOWN.)

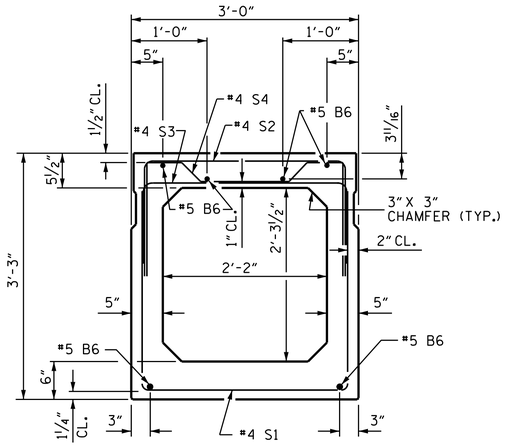

INTERIOR BOX BEAM SECTION

(STRAND LAYOUT NOT SHOWN)

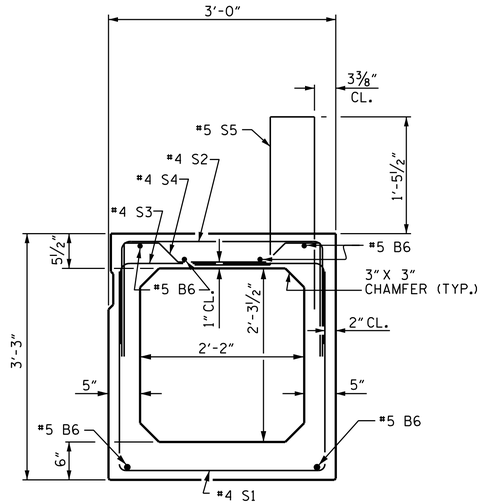

EXTERIOR BOX BEAM SECTION

(STRAND LAYOUT NOT SHOWN)

0.6" Ø LOW RELAXATION STRAND LAYOUT

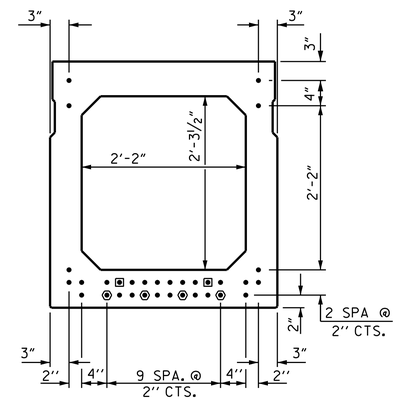

TYPICAL STRAND LOCATION

(32 STRANDS REQUIRED)

DEBONDING LEGEND

- ● FULLY BONDED STRANDS
- ◉ STRANDS DEBONDED FOR 4'-0" FROM END OF GIRDER
- ⬢ STRANDS DEBONDED FOR 12'-0" FROM END OF GIRDER

BOND SHALL BE BROKEN ON STRANDS AS SHOWN FOR THE SPECIFIED LENGTH FROM EACH END OF THE BOX BEAM. SEE STANDARD SPECIFICATIONS ARTICLE 1078-7.

BAR TYPES

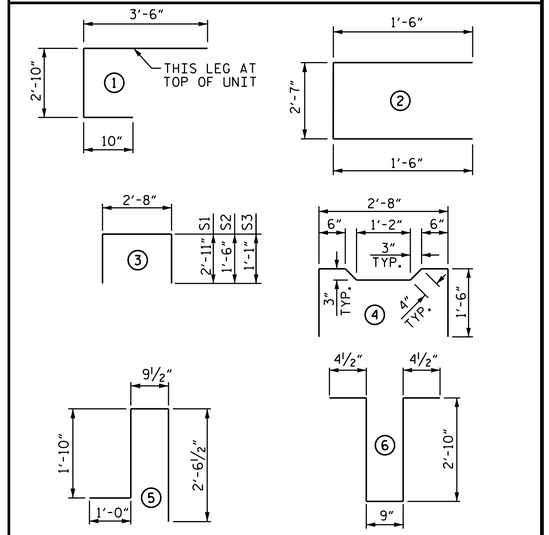

ALL BAR DIMENSIONS ARE OUT TO OUT

BILL OF MATERIAL FOR ONE BOX BEAM SECTION

				EXTERIOR UNIT		INTERIOR UNIT	
BAR	NUMBER	SIZE	TYPE	LENGTH	WEIGHT	LENGTH	WEIGHT
A1	10	#5	1	7'-2"	75	7'-2"	75
A2	44	#4	2	5'-7"	164	5'-7"	164
B6	12	#5	STR	50'-11"	637	50'-11"	637
K1	15	#4	6	7'-2"	72	7'-2"	72
K2	10	#4	STR	2'-7"	17	2'-7"	17
S1	81	#4	3	8'-6"	460	8'-6"	460
S2	81	#4	3	5'-8"	307	5'-8"	307
S3	141	#4	3	4'-10"	455	4'-10"	455
S4	60	#4	4	5'-10"	234	5'-10"	234
✱ S5	133	#5	5	6'-2"	855	--	--
REINFORCING STEEL					2421 LBS.		2421 LBS.
✱ EPOXY COATED REINF. STEEL					855 LBS.		
7500 P.S.I. CONCRETE					19.6 CU. YDS.		19.4 CU. YDS.
0.6" Ø L.R. STRANDS					No. 32		No. 32

GRADE 270 STRANDS

	0.6" Ø L.R.
AREA (SQUARE INCHES)	0.217
ULTIMATE STRENGTH (LBS. PER STRAND)	58,600
APPLIED PRESTRESS (LBS. PER STRAND)	43,950

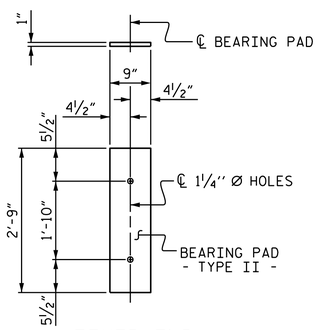

FIXED END

(TYPE II -22 REQ'D)

ELASTOMERIC BEARING DETAILS

ELASTOMER IN ALL BEARINGS SHALL BE 60 DUROMETER HARDNESS.

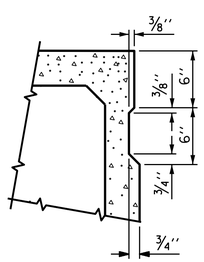

SHEAR KEY DETAIL

NOTE: OMIT SHEAR KEY ON OUTSIDE FACE OF EXTERIOR BOX BEAMS.

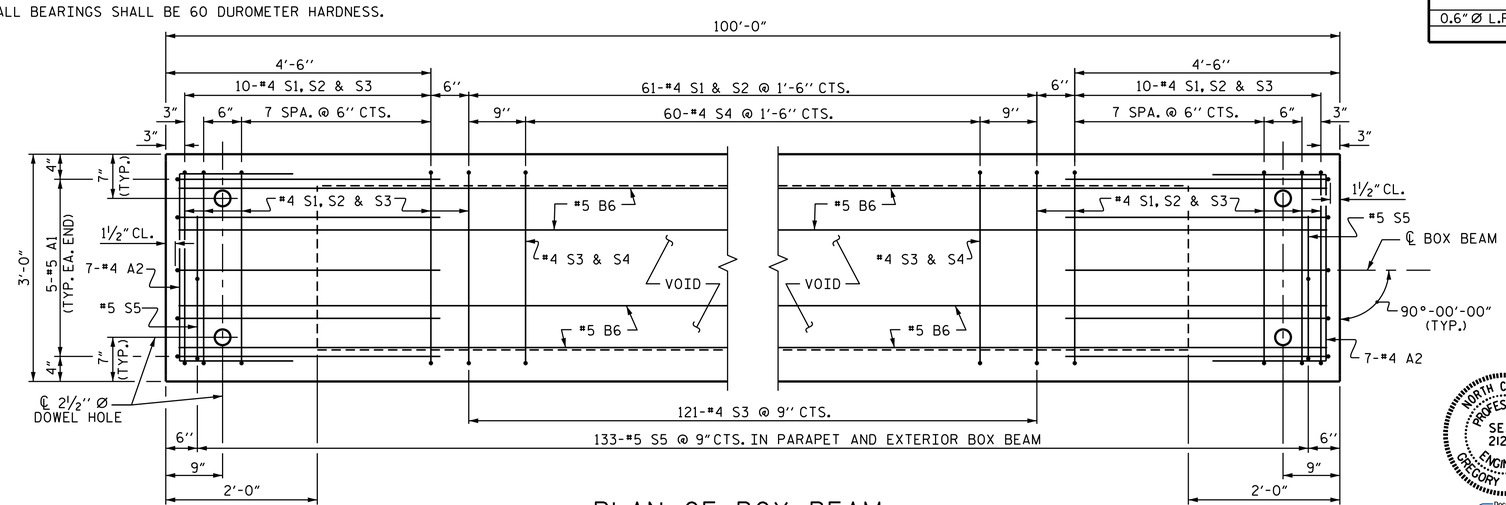

PLAN OF BOX BEAM

EXTERIOR UNIT SHOWN, INTERIOR UNIT SIMILAR EXCEPT OMIT #5 S5 BARS.
FOR LOCATION OF DIAPHRAGMS, SEE "PLAN OF UNIT."
FOR THREADED INSERTS, SEE "TREADED INSERTS DETAIL"
FOR REINFORCING STEEL IN DIAPHRAGMS, SEE "DOUBLE DIAPHRAGM DETAILS".

PROJECT NO. B-4961
GUILFORD COUNTY
STATION: 17+07.00 -L-

SHEET 3 OF 4

STATE OF NORTH CAROLINA
DEPARTMENT OF TRANSPORTATION
RALEIGH

STANDARD

3'-0" X 3'-3" PRESTRESSED CONCRETE BOX BEAM UNIT

NORTH CAROLINA PROFESSIONAL SEAL 21271 ENGINEER GREGORY W. DICKEY

DocuSigned by: Greg Dickey
4/12/2016

DOCUMENT NOT CONSIDERED FINAL UNLESS ALL SIGNATURES COMPLETED

REVISIONS							SHEET NO.
NO.	BY:	DATE:	NO.	BY:	DATE:		S-7
1			3				TOTAL SHEETS
2			4				19

ASSEMBLED BY : REZA KOUCHEKI DATE : 9/1/15
CHECKED BY : K.P. SEDAI DATE : 9/2/15
DRAWN BY : DGE II/II REV. 9/14 MAA/TMG
CHECKED BY : TMG II/II

11-APR-2016 15:28
Z:\Structures\Final Plans\B-4961_SD_BX.dgn
gdickey

STD. NO. 39PCBB6_90S_100L