DocuSign Envelope ID: 34E2C66B-7797-4AB6-9BD3-31F0D6E698EB

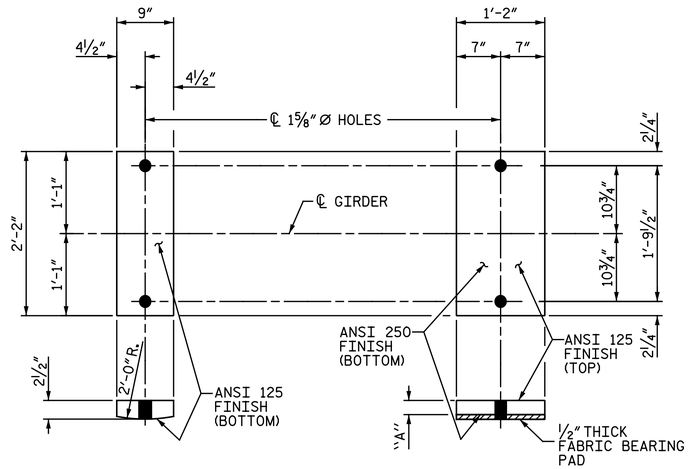

SOLE PLATE MASONRY PLATE

BEARINGS - FIXED END

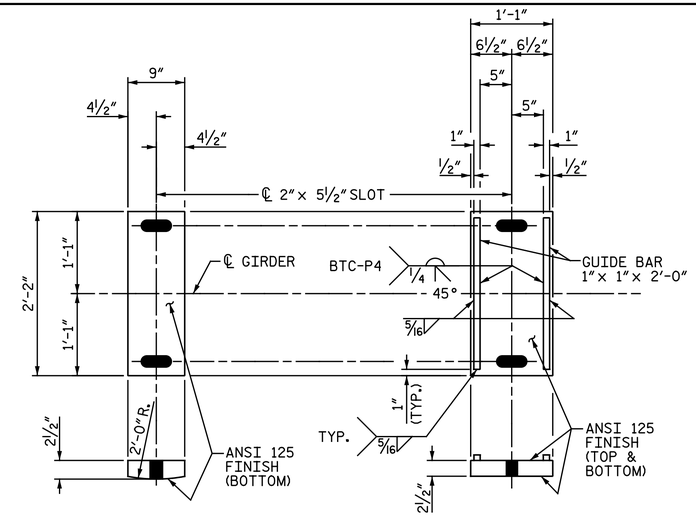

SOLE PLATE SLIDING PLATE

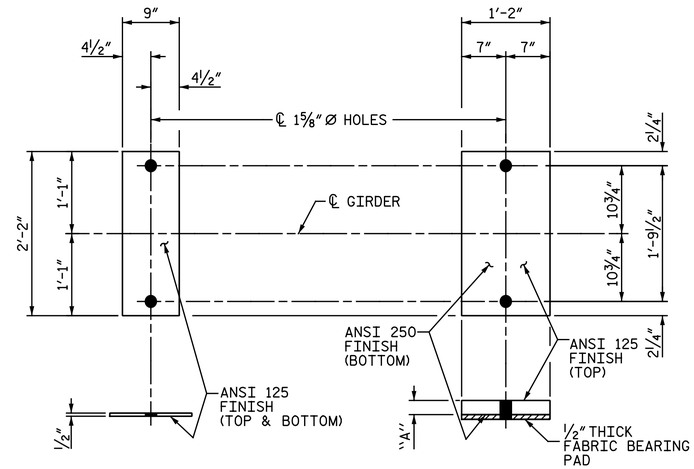

BRONZE PLATE MASONRY PLATE

BEARINGS - EXPANSION END

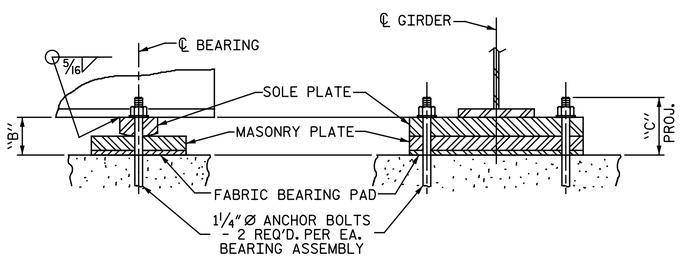

BEARING ASSEMBLY - FIXED END

(32 REQ'D)

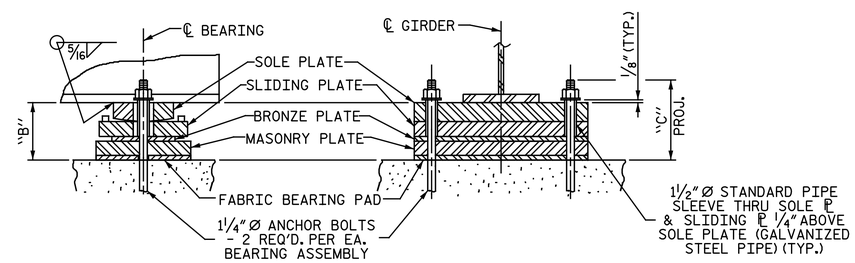

BEARING ASSEMBLY - EXPANSION END

(32 REQ'D)

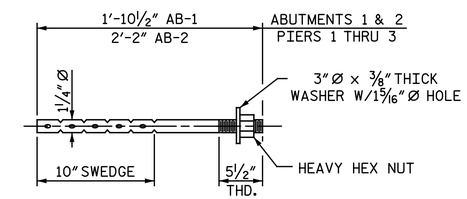

DETAIL OF ANCHOR BOLTS

NOTE: ANCHOR BOLTS SHALL HAVE 1'-3" MIN. EMBEDMENT

NOTES:

AT ALL FIXED POINTS OF SUPPORT, NUTS FOR ANCHOR BOLTS ARE TO BE TIGHTENED FINGER TIGHT AND GIVEN AN ADDITIONAL ¼ TURN. THE THREAD OF THE NUT AND BOLT SHALL BE BURRED WITH A SHARP POINTED TOOL.

BEARING PADS SHALL BE PREFORMED FABRIC BEARING PADS, ½" THICK AND SHALL BE EITHER SHOCK PAD STYLE 15175, AS MANUFACTURED BY THE ALERT MANUFACTURING AND SUPPLY COMPANY, CHICAGO, IL; OR FABREEKA PADS AS MANUFACTURED BY FABREEKA PRODUCTS COMPANY, BOSTON, MA. OR SORBTEX PADS AS MANUFACTURED BY VOSS ENGINEERING, INC. CHICAGO, IL OR AN APPROVED EQUAL.

ALL BEARING PLATES AND PIPE SLEEVES ARE TO BE GALVANIZED. SEE STD. SPEC. 1072-13.

AT THE CONTRACTOR'S OPTION, A FILL PLATE MAY BE USED IN COMBINATION WITH MASONRY PLATE TO OBTAIN REQUIRED PLATE THICKNESS SHOWN IN TABLE. IF A FILL PLATE IS USED, MINIMUM MASONRY PLATE THICKNESS SHALL BE 2¼". MINIMUM FILL PLATE THICKNESS SHALL BE 1¼". FILL PLATES SHALL HAVE THE SAME LENGTH, WIDTH AND HOLE PATTERN AS THE MASONRY PLATE.

MASONRY PLATE SCHEDULE (DIMENSIONS IN INCHES)

	FIXED END @ ABUTMENT 1			EXPANSION END @ PIERS			FIXED END @ PIERS			FIXED END @ ABUTMENT 2		
GIRDER	"A"	"B"	"C"	"A"	"B"	"C"	"A"	"B"	"C"	"A"	"B"	"C"
1	2¼"	5¼"	7½"	2¼"	8¼"	11"	5¼"	8¼"	11"	2¼"	5¼"	7½"
2	2¼"	5¼"	7½"	2¼"	8¼"	11"	5¼"	8¼"	11"	2¼"	5¼"	7½"
3	2¼"	5¼"	7½"	2¼"	8¼"	11"	5¼"	8¼"	11"	2¼"	5¼"	7½"
4	2¼"	5¼"	7½"	2¼"	8¼"	11"	5¼"	8¼"	11"	2¼"	5¼"	7½"
5	2¼"	5¼"	7½"	2¼"	8¼"	11"	5¼"	8¼"	11"	2¼"	5¼"	7½"
6	2¼"	5¼"	7½"	2¼"	8¼"	11"	5¼"	8¼"	11"	2¼"	5¼"	7½"
7	2¼"	5¼"	7½"	2¼"	8¼"	11"	5¼"	8¼"	11"	2¼"	5¼"	7½"
8	2¼"	5¼"	7½"	2¼"	8¼"	11"	5¼"	8¼"	11"	2¼"	5¼"	7½"

PROJECT NO. U-3308
DURHAM COUNTY
STATION: 24+55.20 -LALT-
13+22.18 -CSXN-

NORTH CAROLINA PROFESSIONAL SEAL 25911 ENGINEER DWAIN G. HATHAWAY

DocuSigned by: Dwain Hathaway
2837B0071DA0460...
5/3/2016

Michael Baker INTERNATIONAL
Michael Baker Engineering
8000 Regency Parkway, Suite 600
Cary, North Carolina 27518
NC License No.: F-1084

STATE OF NORTH CAROLINA
DEPARTMENT OF TRANSPORTATION
RALEIGH
SUPERSTRUCTURE
BEARING DETAILS

REVISIONS								SHEET NO.
NO.	BY:	DATE:	NO.	BY:	DATE:			S4-23
1			3					TOTAL SHEETS
2			4					68

DRAWN BY : M. D. MAYHEW DATE : 1-7-14
CHECKED BY : S. A. DENNEY DATE : 3-3-14

amayhew 5/3/2016 9:37:09 AM
Filename: Y:\Projects\NCDOT\U-3308\Structures\Dwgs\Final\404_023_U3308_SMU_BD.dgn

SITE 4