DocuSign Envelope ID: CEF63F8A-0349-4A01-83E3-A00BD2910742

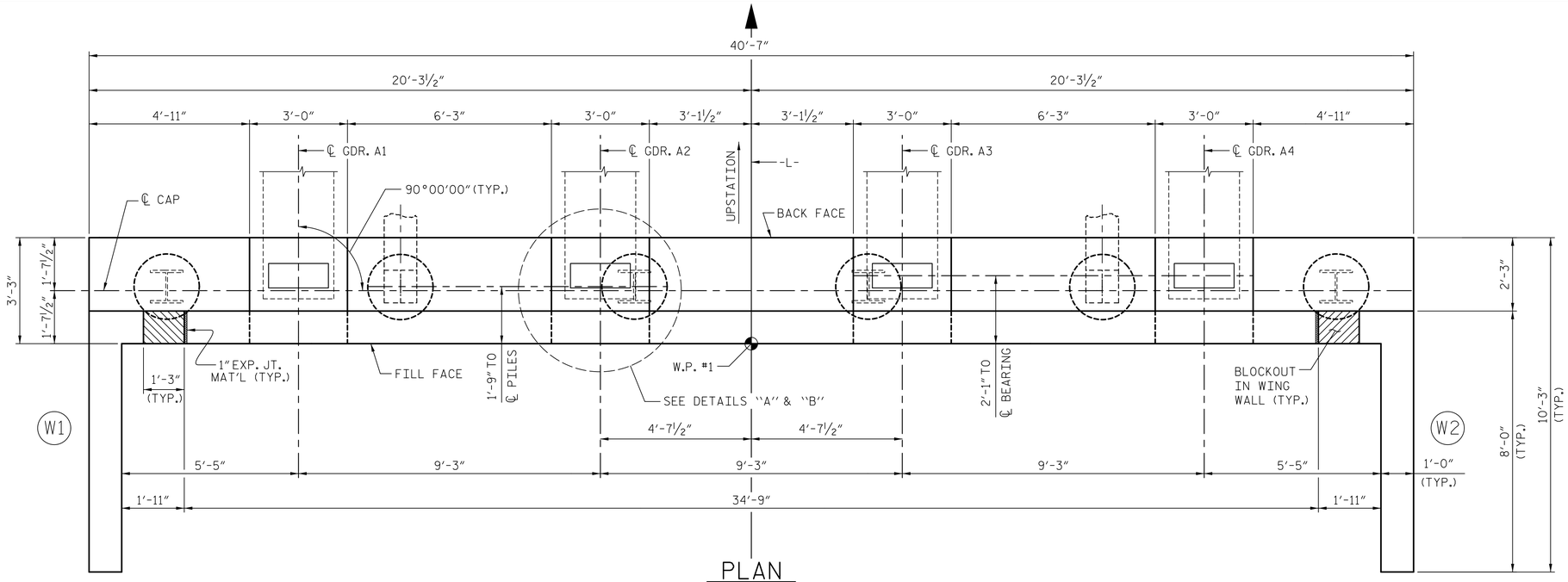

PLAN

NOTES:

FOR PILE SPLICE DETAILS, SEE END BENT 1, SHEET 3 OF 3.

FOR SECTION A-A, SEE END BENT 1, SHEET 3 OF 3.

FOR DETAILS OF LOWER WINGWALLS AND REINFORCING STEEL, SEE END BENT 1, SHEET 2 OF 3.

FOR TEMPORARY DRAINAGE DETAILS, SEE END BENT 1, SHEET 3 OF 3.

FOR BLOCKOUT IN WINGWALL DETAIL, SEE END BENT 1, SHEET 3 OF 3.

★ THIS ELEVATION TAKEN ON FILL FACE OF THE BACKWALL

✻✻ REINFORCING IN WING NOT SHOWN FOR CLARITY. FOR DETAIL, SEE END BENT 1, SHEET 2 OF 3.

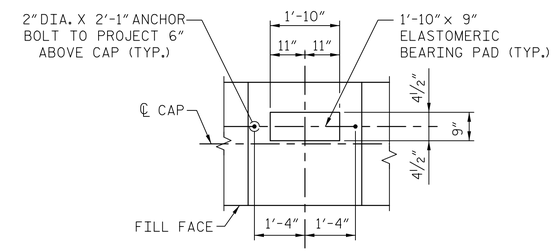

DETAIL "A"

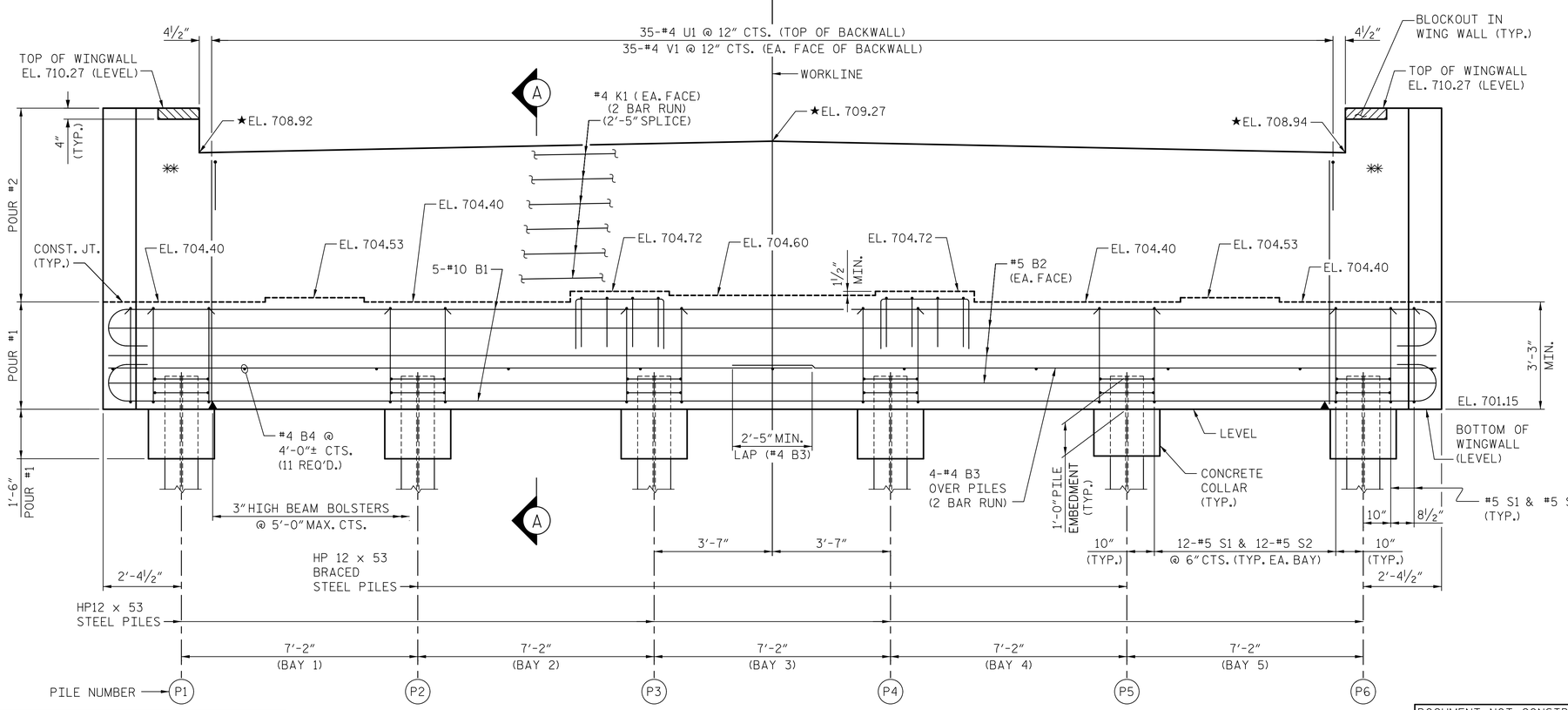

ELEVATION

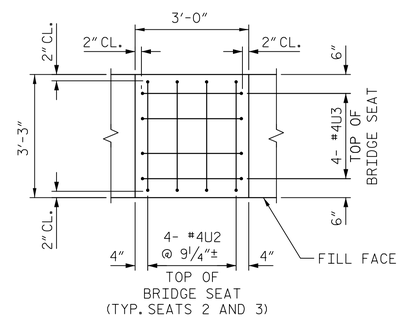

DETAIL "B"

PROJECT NO. U-2707

FORSYTH COUNTY

STATION: 90+25.00 -L-

SHEET 1 OF 3 BRIDGE NO. 656

AECOM
AECOM TECHNICAL SERVICES, INC.
701 CORPORATE CENTER DRIVE, SUITE 475
RALEIGH, NC 27607
(919) 854-6200 www.aecom.com
AECOM License No. F-0342

NORTH CAROLINA PROFESSIONAL SEAL 030474 ENGINEER JOHN C. MORRISON
DocuSigned by: John C. Morrison
1/12/2016

STATE OF NORTH CAROLINA
DEPARTMENT OF TRANSPORTATION
RALEIGH

SUBSTRUCTURE
END BENT 1
PLAN AND ELEVATION

REVISIONS						SHEET NO.
NO.	BY:	DATE:	NO.	BY:	DATE:	S-31
						TOTAL SHEETS
						86

DRAWN BY : MKT DATE : 11/2015
CHECKED BY : JCM DATE : 11/2015

DOCUMENT NOT CONSIDERED FINAL UNLESS ALL SIGNATURES COMPLETED

DATE: 1/12/2016
TIME: 9:25:32 AM

USER: kyle_compton
DGN: R:\Bridge 656\Cadd\401_06_U2707_SMU_S31_EB1.0.dgn