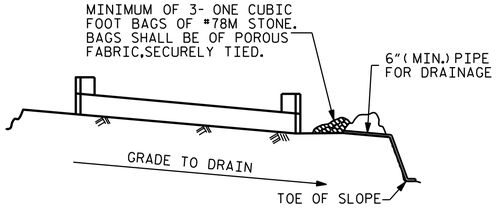

BAGGED STONE AND PIPE SHALL BE PLACED IMMEDIATELY AFTER COMPLETION OF END BENT EXCAVATION. PIPE MAY BE EITHER CONCRETE, CORRUGATED STEEL, CORRUGATED ALUMINUM ALLOY, OR CORRUGATED PLASTIC. PERFORATED PIPE WILL NOT BE ALLOWED.

BAGGED STONE SHALL REMAIN IN PLACE UNTIL THE ENGINEER DIRECTS THAT IT BE REMOVED. THE CONTRACTOR SHALL REMOVE AND DISPOSE OF SILT ACCUMULATIONS AT BAGGED STONE WHEN SO DIRECTED BY THE ENGINEER. BAGS SHALL BE REMOVED AND REPLACED WHENEVER THE ENGINEER DETERMINES THAT THEY HAVE DETERIORATED AND LOST THEIR EFFECTIVENESS.

NO SEPARATE PAYMENT WILL BE MADE FOR THIS WORK AND THE ENTIRE COST OF THIS WORK SHALL BE INCLUDED IN THE UNIT CONTRACT PRICE BID FOR THE SEVERAL PAY ITEMS.

TEMPORARY DRAINAGE AT END BENT

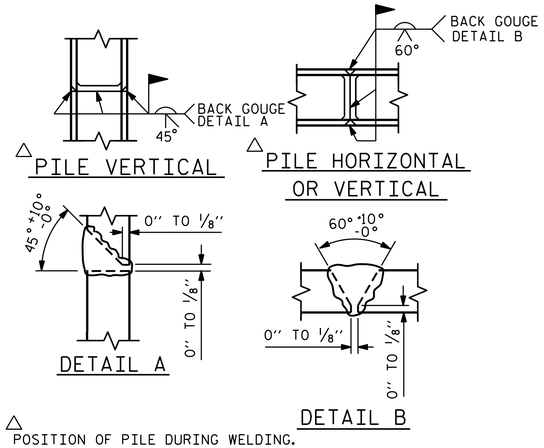

△ POSITION OF PILE DURING WELDING.

PILE SPLICE DETAILS

BAR TYPES

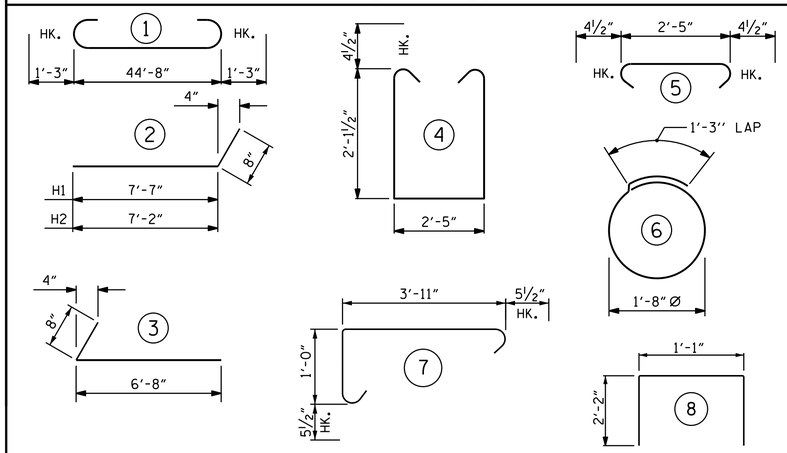

ALL BAR DIMENSIONS ARE OUT TO OUT.

HP 12 X 53 STEEL PILES
NO: 7 LIN. FT.= 335 LIN. FT.

18" GALVANIZED STEEL SHEET PILES
NO. PZ27 = 42
NO. PZ90 = 2
TOTAL NO. = 44 1153 SQ. FT.

BILL OF MATERIAL
END BENT No.2

BAR	NO.	SIZE	TYPE	LENGTH	WEIGHT
B1	8	#9	1	47'-2"	1283
B2	12	#4	STR	23'-7"	189
B3	12	#4	STR	2'-5"	19
B4	3	#5	STR	48'-2"	151
B5	2	#5	STR	11'-5"	24
B6	2	#5	STR	10'-11"	23
B7	2	#5	STR	10'-9"	22
B8	2	#5	STR	10'-2"	21
D1	22	#6	STR	1'-6"	50
H1	6	#4	2	8'-3"	33
H2	6	#4	2	7'-10"	31
H3	12	#4	3	7'-4"	59
K1	3	#4	STR	3'-5"	7
K2	9	#4	STR	3'-7"	22
S1	56	#4	4	7'-5"	277
S2	56	#4	5	3'-2"	118
S3	14	#4	6	6'-6"	61
S4	46	#5	7	5'-10"	280
U1	22	#5	8	5'-5"	124
V1	23	#4	STR	4'-1"	63
V2	24	#4	STR	4'-5"	71

REINFORCING STEEL 2928 LBS.

CLASS A CONCRETE BREAKDOWN

POUR #1 CAP, LOWER PART OF WINGS, COLLARS & COPING 19.6 CU. YDS.

POUR #2 UPPER PART OF WINGS 1.6 CU. YDS.

TOTAL CLASS A CONCRETE 21.2 CU. YDS.

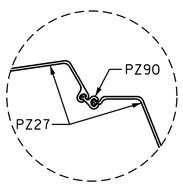

DETAIL "B"

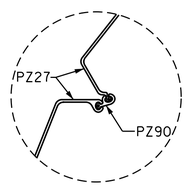

DETAIL "C"

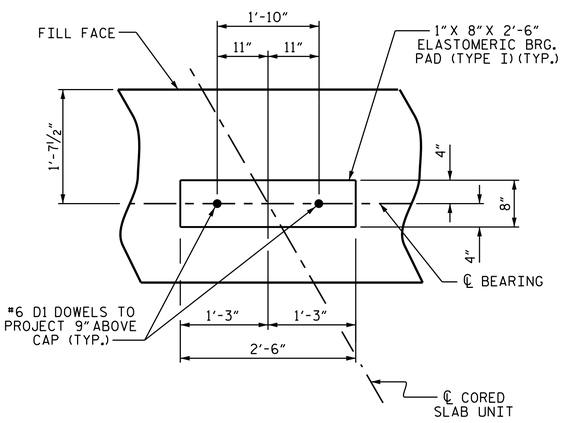

DETAIL "A"

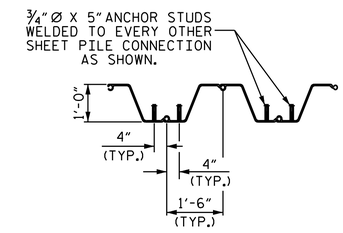

ANCHOR STUD DETAIL

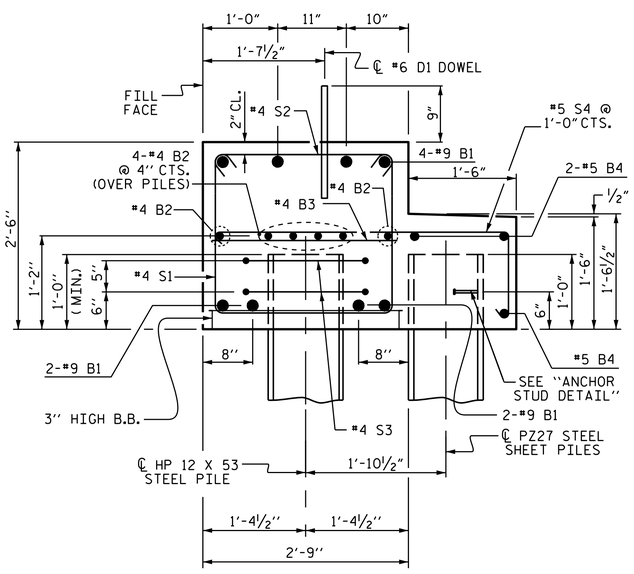

SECTION A-A

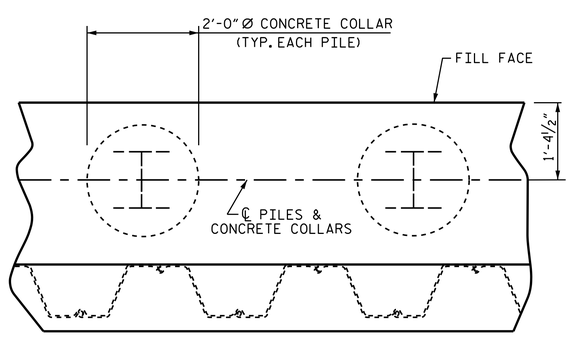

PLAN

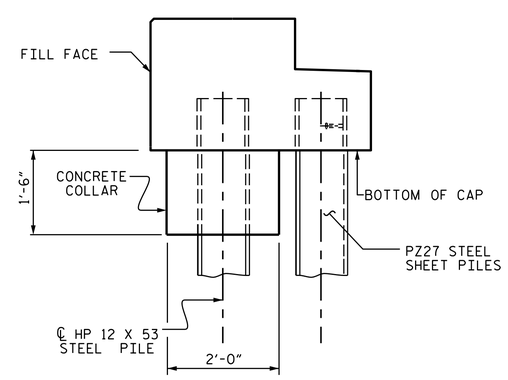

ELEVATION

CORROSION PROTECTION FOR STEEL PILES DETAIL

PROJECT NO. B-5244
BUNCOMBE COUNTY
STATION: 14+02.00 -L-

SHEET 3 OF 3

STATE OF NORTH CAROLINA
DEPARTMENT OF TRANSPORTATION
RALEIGH

SUBSTRUCTURE

END BENT No. 2
DETAILS

NORTH CAROLINA PROFESSIONAL SEAL 20125 ENGINEER MARSHALL G. CHECK, JR.
DocuSign Envelope ID: 6549D6EBAA3B405...
Marshall G. Check, Jr.
12/21/2015

DOCUMENT NOT CONSIDERED FINAL UNLESS ALL SIGNATURES COMPLETED

REVISIONS						SHEET NO.
NO.	BY:	DATE:	NO.	BY:	DATE:	S-17
1			3			TOTAL SHEETS
2			4			18

DRAWN BY : W.J. HARRIS DATE : 6/15
CHECKED BY : B.N. GRADY DATE : 10/15
DESIGN ENGINEER OF RECORD: W.J. HARRIS DATE : 12/15

18-DEC-2015 13:26
R:\Structures\Final Plans\B5244_SD_E*.dgn
bngrady