PROJ. REFERENCE NO.	SHEET NO.
B-5404	TMP-4

RAMEY KEMP & ASSOCIATES, INC.
Transportation Engineers
5808 Faringdon Place, Suite 100
Raleigh, North Carolina 27609
919-872-5115 Tel. 919-878-5416 Fax.
www.rameykemp.com
NC License No. C-0910

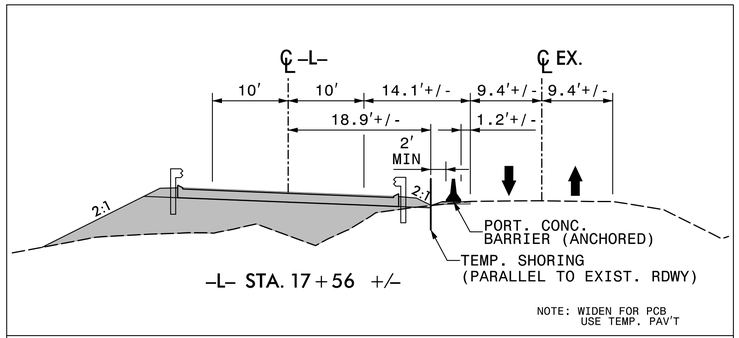

SECTION A-A'

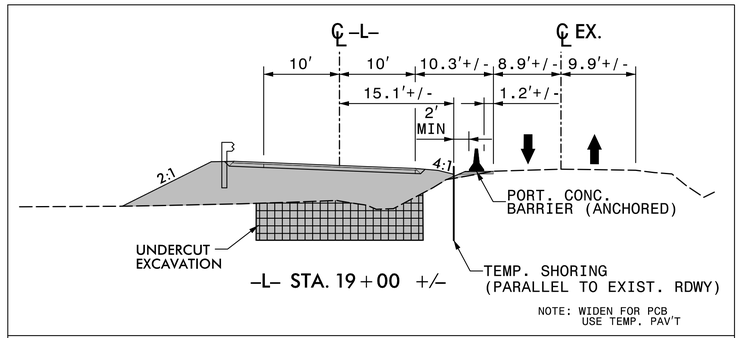

SECTION B-B'

NAD 83/NSRS 2007

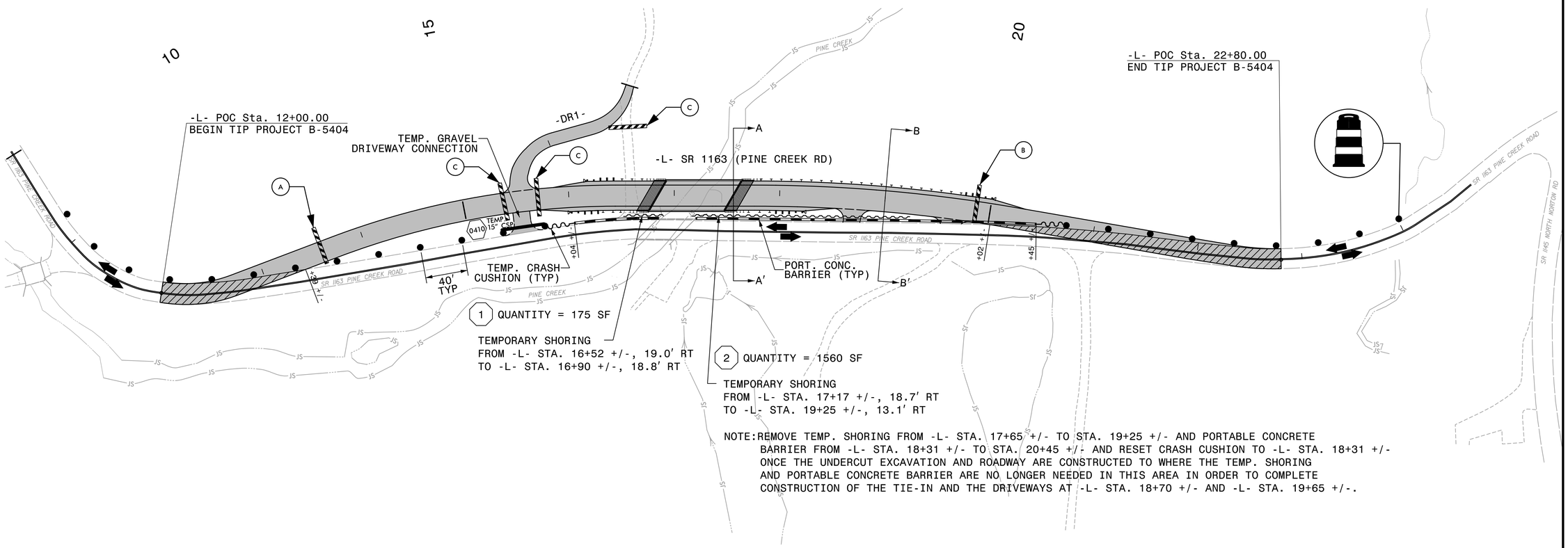

NOTE: REMOVE TEMP. SHORING FROM -L- STA. 17+65 +/- TO STA. 19+25 +/- AND PORTABLE CONCRETE BARRIER FROM -L- STA. 18+31 +/- TO STA. 20+45 +/- AND RESET CRASH CUSHION TO -L- STA. 18+31 +/- ONCE THE UNDERCUT EXCAVATION AND ROADWAY ARE CONSTRUCTED TO WHERE THE TEMP. SHORING AND PORTABLE CONCRETE BARRIER ARE NO LONGER NEEDED IN THIS AREA IN ORDER TO COMPLETE CONSTRUCTION OF THE TIE-IN AND THE DRIVEWAYS AT -L- STA. 18+70 +/- AND -L- STA. 19+65 +/-.

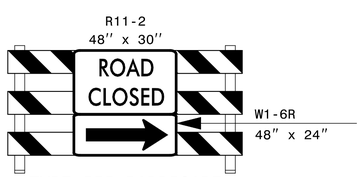

TYPE III BARRICADE

(A)

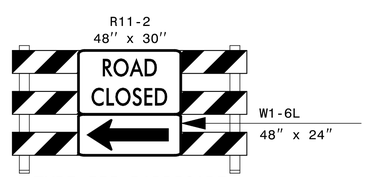

TYPE III BARRICADE

(B)

TYPE III BARRICADE

(C)

NOTE: SEE SHEET TMP-2A FOR TEMPORARY SHORING NOTES
NOTE: SEE ROADWAY PLANS FOR ATTACHMENT DETAIL OF PCB TO EXISTING BRIDGE.

APPROVED Claudette M. K. Rogers DATE: 9/18/2015

SEAL

NORTH CAROLINA PROFESSIONAL SEAL 17306 ENGINEER CLAUDETTE M.K. ROGUE

DIVISION OF HIGHWAYS
STATE OF NORTH CAROLINA
DEPARTMENT OF TRANSPORTATION
WORK ZONE TRAFFIC CONTROL

TEMPORARY TRAFFIC CONTROL PHASE I DETAIL

9/11/2015
J:\TEP\B-5404_TC_TMP_S04.dgn
User: croque