DocuSign Envelope ID: 9A6E292B-D8CA-4D15-852D-5C4176499940

PROJECT REFERENCE NO.	SHEET NO.
B-5404	2C-1

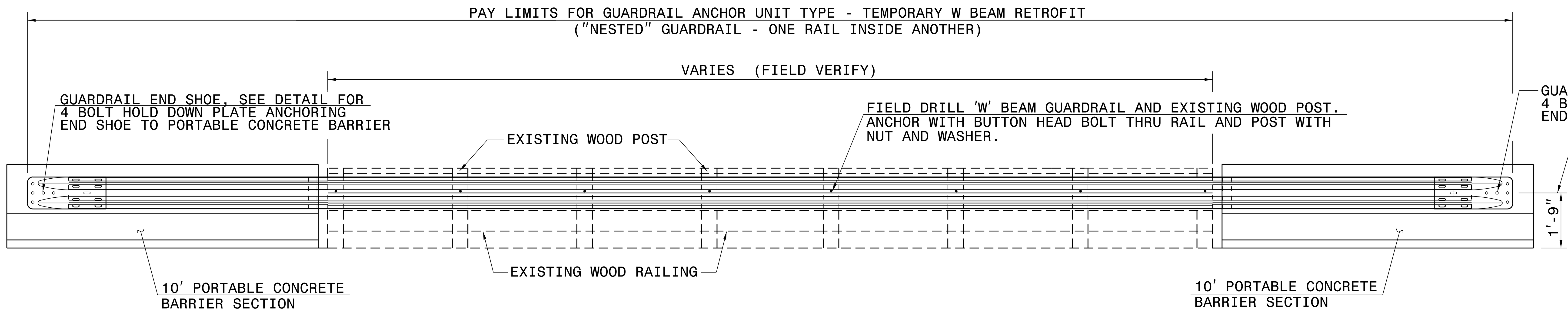

ELEVATION VIEW

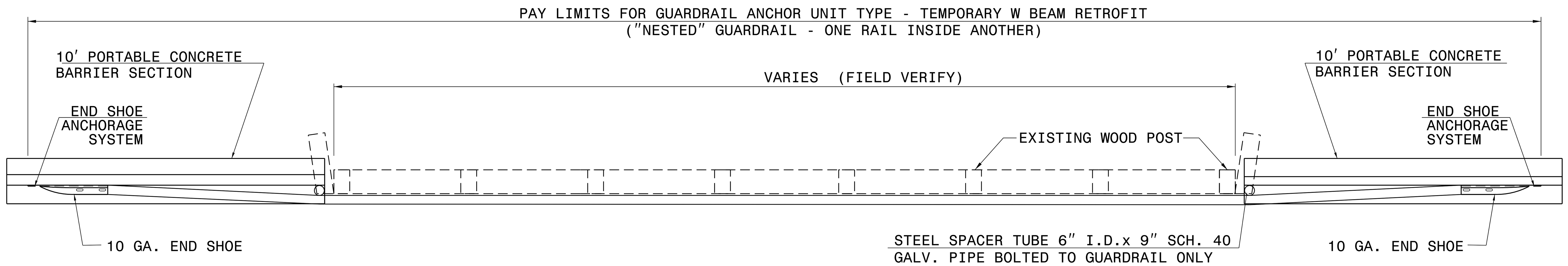

PLAN VIEW

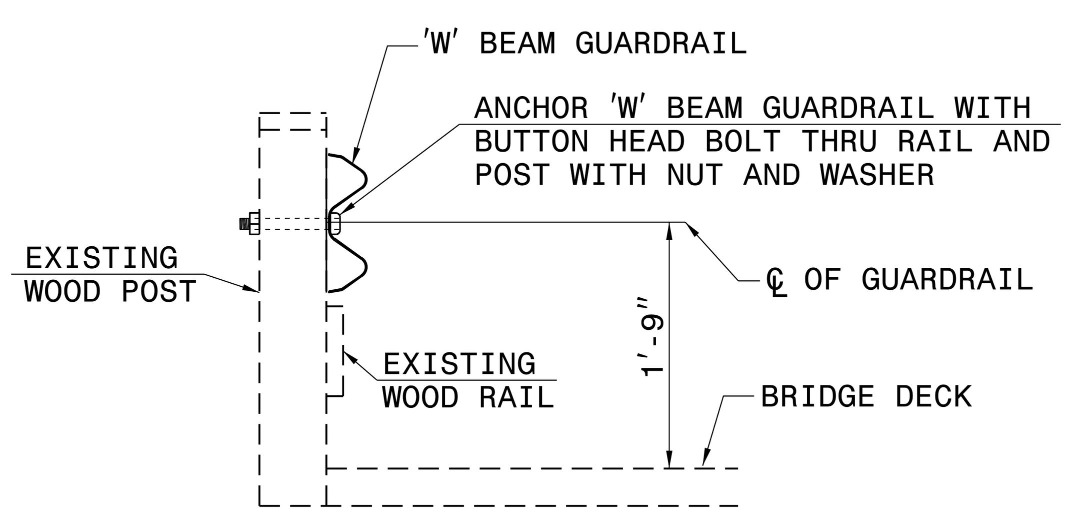

SECTION VIEW

GUARDRAIL ATTACHMENT TO WOOD POST

NOTES FOR 4 BOLT HOLD DOWN PLATE

THE GUARDRAIL ANCHOR ASSEMBLY SHALL CONSIST OF A 1/4" HOLD DOWN PLATE AND 4 - 7/8" DIA. BOLTS WITH NUTS AND WASHERS.

THE HOLD-DOWN PLATE SHALL CONFORM TO AASHTO M270 GRADE 36. AFTER FABRICATION, THE HOLD-DOWN PLATE SHALL BE HOT-DIP GALVANIZED IN ACCORDANCE WITH AASHTO M111.

AFTER INSTALLATION, THE EXPOSED THREAD OF THE BOLT SHALL BE BURRED WITH A SHARP POINTED TOOL. THE 1 1/4" DIA. HOLES SHALL BE FORMED OR DRILLED WITH A CORE BIT. IMPACT TOOLS WILL NOT BE PERMITTED. ANY CONCRETE DAMAGED BY THIS WORK SHALL BE REPAIRED TO THE SATISFACTION OF THE ENGINEER.

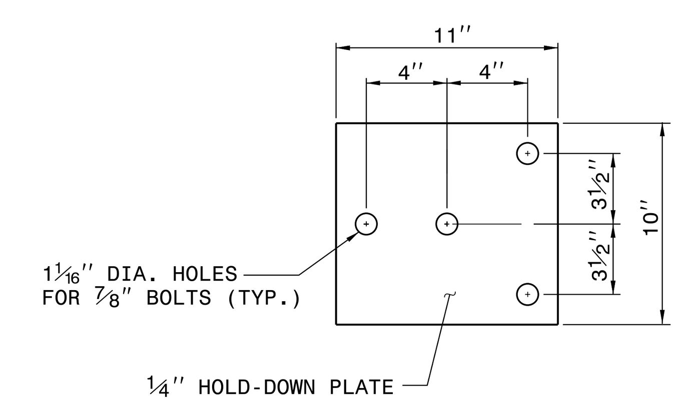

4 BOLT HOLD DOWN PLATE

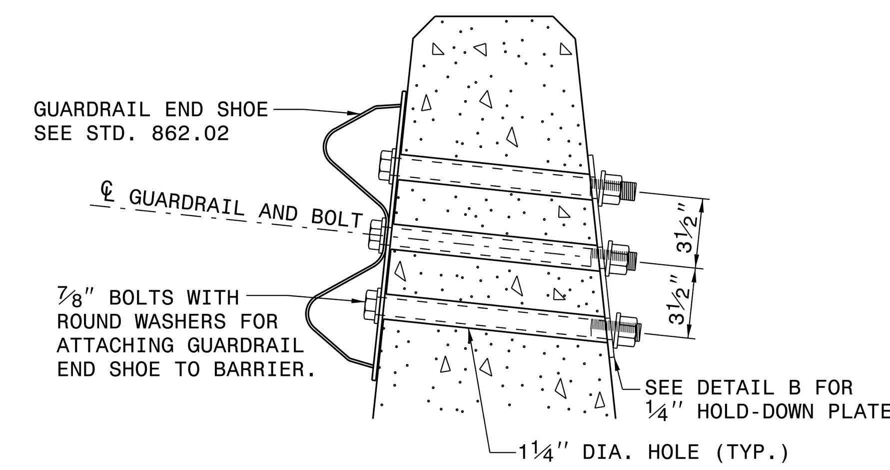

PART SECTION OF BARRIER OR RAIL

THRU END SHOE SECTION AND
4 BOLT HOLD DOWN PLATE

DocuSigned by:
Joel Howerton
873F3D17DCDC45F...
11/12/2015

CONTRACT STANDARDS AND DEVELOPMENT UNIT
Office 919-707-6950 FAX 919-250-4119

DETAIL OF GUARDRAIL ANCHOR UNIT TYPE TEMPORARY W BEAM RETROFIT

ORIGINAL BY: E.E. WARD DATE: 04-05
MODIFIED BY: DATE:
CHECKED BY: DATE:
FILE SPEC.: usr/details/stand/862stds/anc.dgn

$$$$$$SYSTIME$$$$$
$$$$$$$$$$DGN$$$$$$$$$$$$$$$
$$$$$USERNAME$$$$