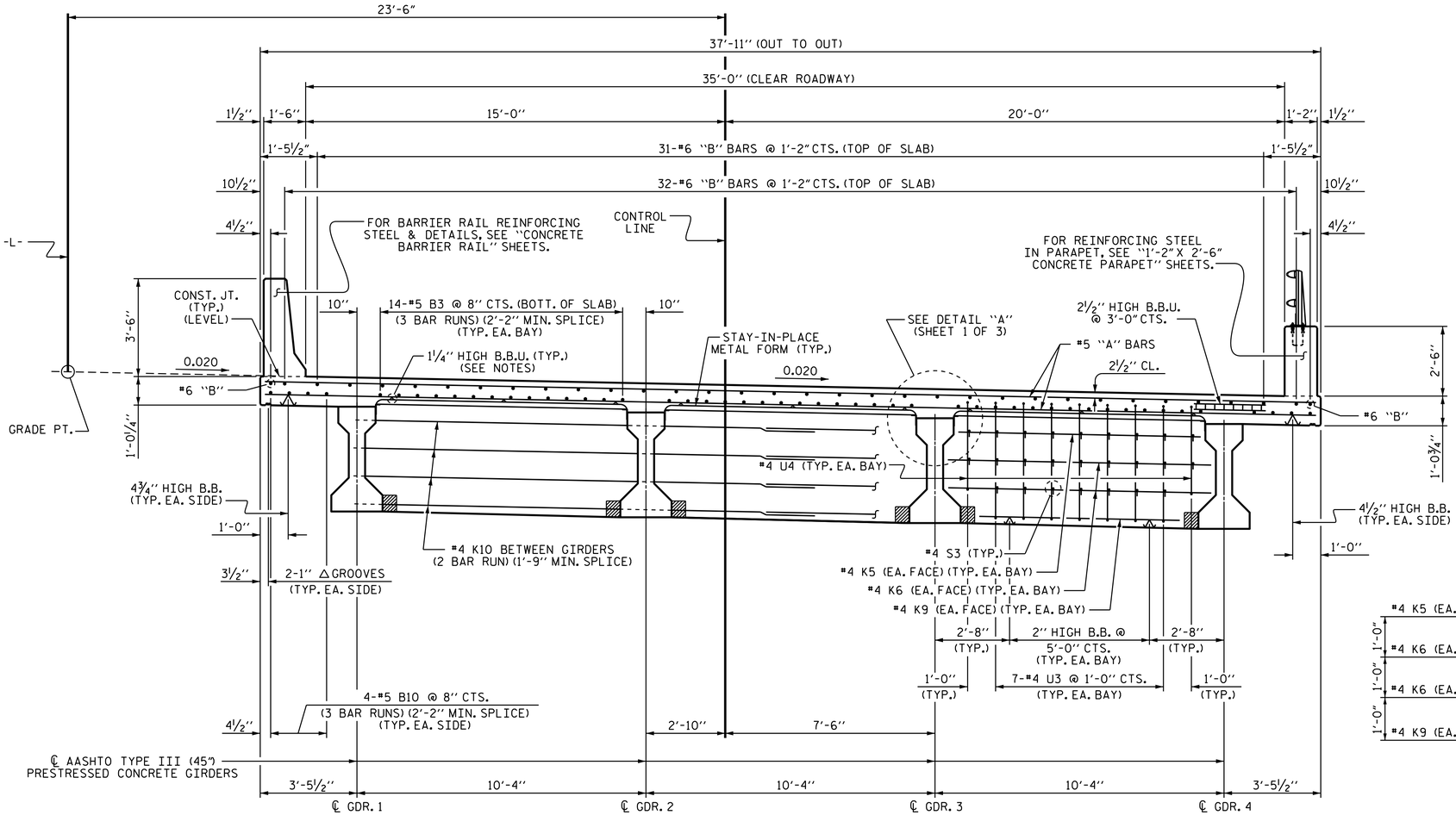

TYPICAL SECTION AT BENT DIAPHRAGM

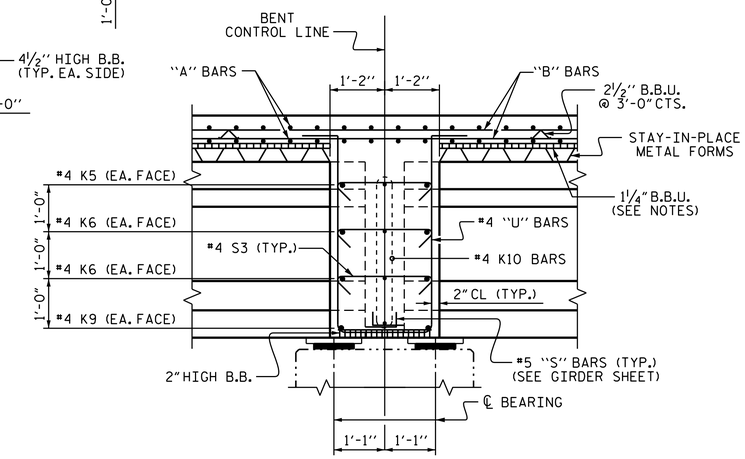

SECTION THRU BENT DIAPHRAGM

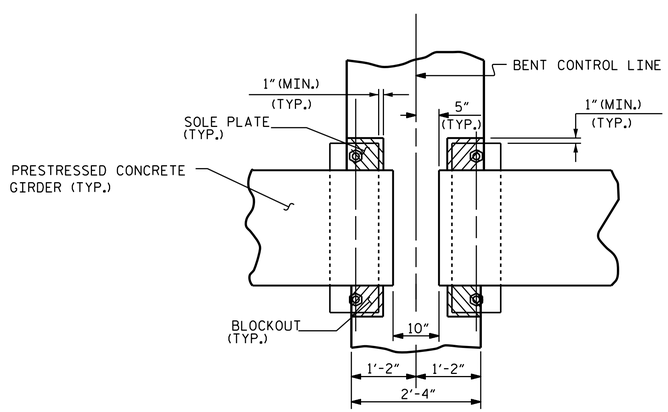

PLAN

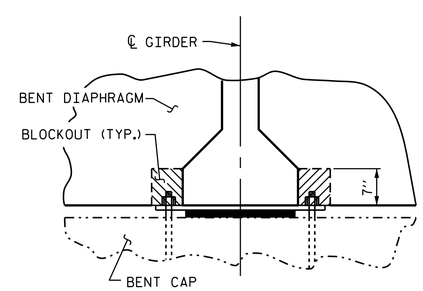

SECTION

BENT DIAPHRAGM BLOCKOUT DETAIL

PROJECT NO. R-2603

WILKES COUNTY

STATION: 117+35.00 -L-

SHEET 2 OF 3

STATE OF NORTH CAROLINA
DEPARTMENT OF TRANSPORTATION
RALEIGH

SUPERSTRUCTURE TYPICAL SECTION

NORTH CAROLINA PROFESSIONAL SEAL 20125 ENGINEER MARSHALL G. CHEEK, JR.

DocuSigned by: Marshall G. Cheek, Jr. 6549D6EBAA3B405...
7/22/2015

REVISIONS						SHEET NO.
NO.	BY:	DATE:	NO.	BY:	DATE:	S-11
1			3			TOTAL SHEETS
2			4			47

DRAWN BY :	D. A. GLADDEN	DATE :	6-24-13
CHECKED BY :	H. T. BARBOUR	DATE :	8-13
DESIGN ENGINEER OF RECORD:	B.A. DUKE	DATE :	7-15

21-JUL-2015 08:31
R:\Structures\Final Plans\Str#2\R2603_SD_TS_02.dgn
bngrady

STR. #2