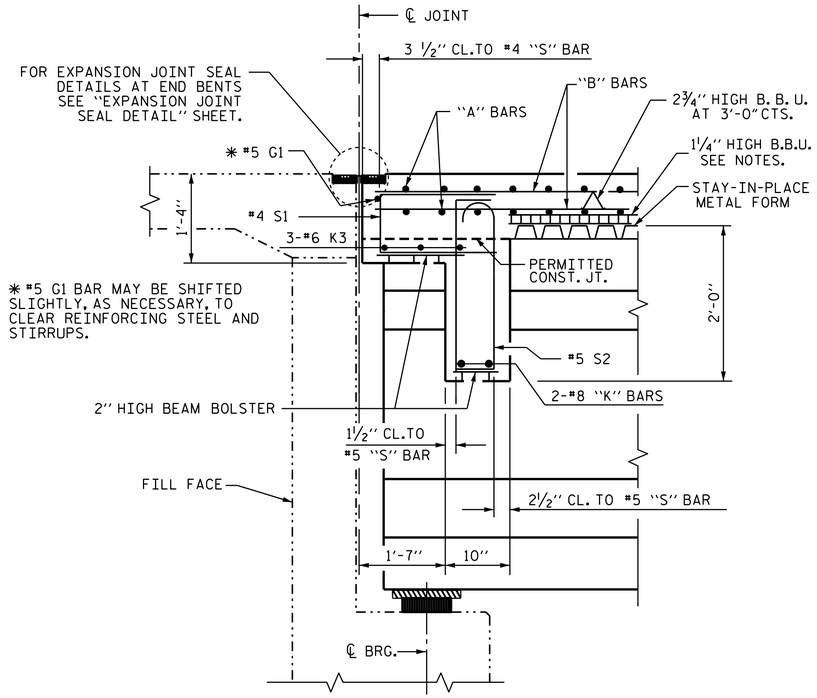

SECTION THRU END BENT

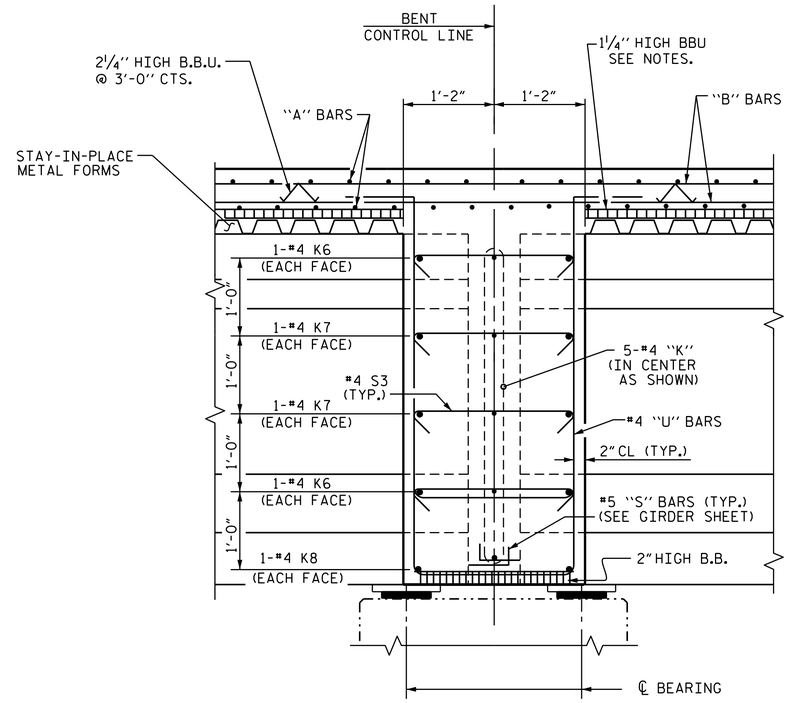

SECTION THRU BENT DIAPHRAGM

NOTES

PROVIDE 1¼" HIGH BEAM BOLSTERS UPPER AT 4'-0" CTS. ATOP THE METAL STAY-IN-PLACE FORMS TO SUPPORT THE BOTTOM MAT OF 'A' BARS. WHEN USING REMOVABLE FORMS, PROVIDE CONTINUOUS HIGH CHAIRS FOR METAL DECK (C.H.C.M.) @ 4'-0" CTS. WITH A HEIGHT TO SUPPORT THE BOTTOM MAT OF 'A' BARS A CLEAR DISTANCE OF 2½" ABOVE THE TOP OF THE REMOVABLE FORM.

LONGITUDINAL STEEL MAY BE SHIFTED SLIGHTLY, AS NECESSARY, TO AVOID INTERFERENCE WITH STIRRUPS IN PRESTRESSED CONCRETE GIRDERS.

PREVIOUSLY CAST CONCRETE IN A CONTINUOUS UNIT SHALL HAVE ATTAINED A MINIMUM COMPRESSIVE STRENGTH OF 3,000 PSI BEFORE ADDITIONAL CONCRETE IS CAST IN THE UNIT.

BARRIER RAIL AND PERMANENT CONCRETE MEDIAN STRIP IN A CONTINUOUS UNIT SHALL NOT BE CAST UNTIL ALL SLAB CONCRETE IN THE UNIT HAS BEEN CAST AND HAS REACHED A MINIMUM COMPRESSIVE STRENGTH OF 3,000 PSI.

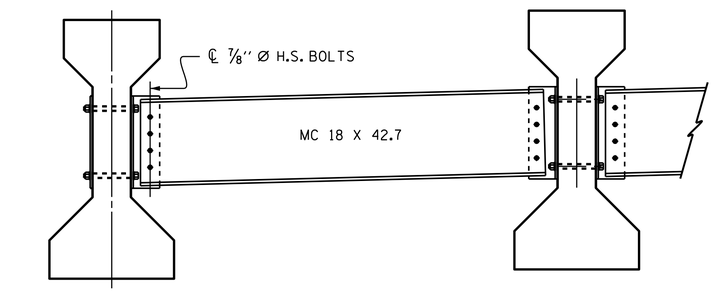

PART TYPICAL SECTION

(SHOWING INTERMEDIATE DIAPHRAGMS)
(FOR DETAILS, SEE "INTERMEDIATE STEEL DIAPHRAGMS FOR TYPE IV PRESTRESSED CONCRETE GIRDERS" SHEET.

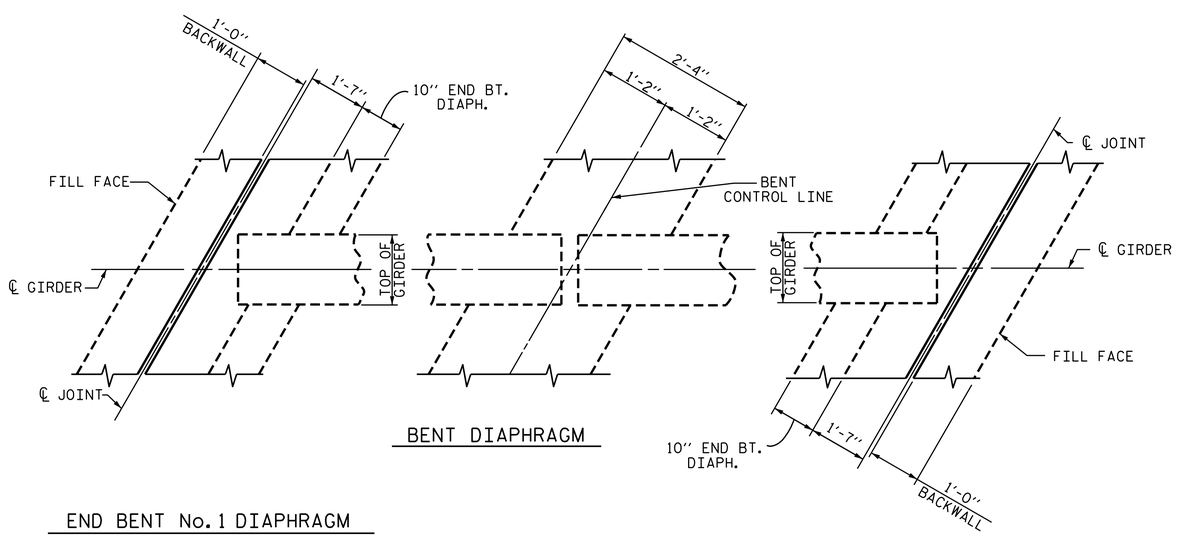

PLAN

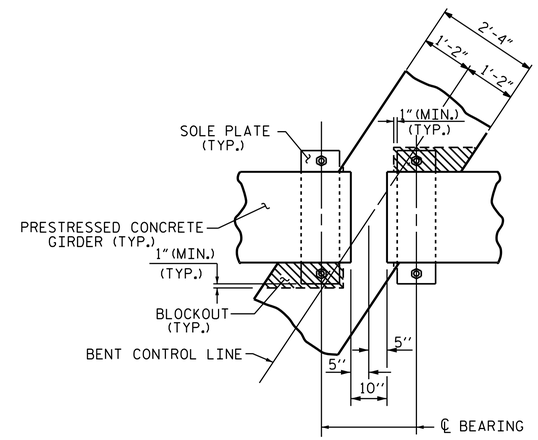

PLAN

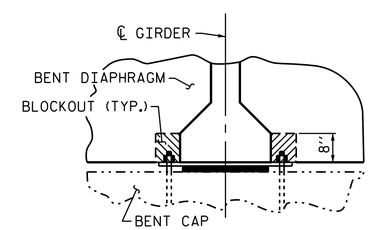

SECTION

BENT DIAPHRAGM BLOCK-OUT DETAIL

PROJECT NO. R-2915A
WATAUGA/ASHE COUNTY
STATION: 11+18.63 -L-

SHEET 2 OF 2

STATE OF NORTH CAROLINA
DEPARTMENT OF TRANSPORTATION
RALEIGH

SUPERSTRUCTURE

TYPICAL SECTION DETAILS

NORTH CAROLINA PROFESSIONAL SEAL 17230 ENGINEER WAEL S. ARAFAT

DocuSigned by: Wael Arafat
7/28/2015

REVISIONS								SHEET NO.
NO.	BY:	DATE:	NO.	BY:	DATE:			S-6
1			3					TOTAL SHEETS
2			4					31

DRAWN BY :	V.X. NGUYEN	DATE :	7-30-14
CHECKED BY :	D. HODGE	DATE :	1-15
DESIGN ENGINEER OF RECORD:	A.M. LEE	DATE :	4-15

24-JUL-2015 09:42
R:\Structures\FinalPlans\STR#1\R-2915A_SD_TS.dgn
warafat

STR. #1