PAVEMENT SCHEDULE (FINAL)

ITEM	DESCRIPTION	ITEM	DESCRIPTION	ITEM	DESCRIPTION
C1	PROPOSED APPROXIMATE 3.0 IN. ASPHALT SURFACE COURSE, TYPE S9.5B, AT AN AVERAGE RATE OF 168 LBS/SY IN EACH OF TWO LAYERS.	D2	PROP. VAR. DEPTH ASPHALT INT. COURSE, TYPE I19.0B, AT AN AVERAGE RATE OF 114 LBS/SY/IN. IN LIFTS NOT LESS THAN 2.5 IN. NOR GREATER THAN 4.0 IN. (MAX TOTAL LAYER=4.0 IN.)	J3	8" AGGREGATE BASE COURSE
C2	PROP. VAR. DEPTH ASPHALT CONC. SURFACE COURSE, TYPE S9.5B, AT AN AVERAGE RATE OF 112 LBS/SY/IN. IN LIFTS NOT LESS THAN 1.5 IN. NOR GREATER THAN 2.0 IN.	E1	PROP. APPROX. 4.0 IN. ASPHALT BASE COURSE, TYPE B25.0B, AT AN AVERAGE RATE OF 456 LBS/SY.	K	BASE TO BE TREATED WITH LIME TO A DEPTH OF 8", AT A RATE OF 20LBS/SY OR CEMENT TO A DEPTH OF 7" AT A RATE OF 55LBS/SY AS DIRECTED BY THE ENGINEER.
C3	PROPOSED APPROXIMATE 2.5 IN. ASPHALT SURFACE COURSE, TYPE SF9.5A, AT AN AVERAGE RATE OF 137.5 LBS/SY IN EACH OF TWO LIFTS. LIFTS NOT LESS THAN 1.0 IN. NOR GREATER THAN 1.5 IN.	E2	PROP. APPROX. 5.0 IN. ASPHALT BASE COURSE, TYPE B25.0B, AT AN AVERAGE RATE OF 570 LBS/SY.	N	GEOTEXTILE FOR PAVEMENT STABILIZATION
C4	PROP. VAR. DEPTH ASPHALT CONC. SURFACE COURSE, TYPE SF9.5A, AT AN AVERAGE RATE OF 110 LBS/SY/IN. IN LIFTS NOT LESS THAN 1.0 IN. NOR GREATER THAN 1.5 IN.	E3	PROP. APPROX. 5.5 IN. ASPHALT BASE COURSE, TYPE B25.0B, AT AN AVERAGE RATE OF 627 LBS/SY.	P	PRIME COAT AT THE RATE OF 0.5 GAL. PER SQ YARD
C5	PROPOSED APPROXIMATE 1.5 IN. ASPHALT SURFACE COURSE, TYPE S9.5B, AT AN AVERAGE RATE OF 168 LBS/SY/IN.	E4	PROP. VAR. DEPTH ASPHALT BASE COURSE, TYPE B25.0B, AT AN AVERAGE RATE OF 114 LBS/SY/IN IN LIFTS NOT LESS THAN 3 IN. NOR GREATER THAN 5.5 IN.	R1	2'-9" CURB & GUTTER
C6	PROPOSED APPROXIMATE 1.25 IN. ASPHALT SURFACE COURSE, TYPE SF9.5A, AT AN AVERAGE RATE OF 137.50 LBS/SY/IN.	J1	10" AGGREGATE BASE COURSE	R2	5" MONOLITHIC CONCRETE ISLAND (KEYED IN)
D1	PROP. APPROX. 4.0 IN. ASPHALT INT. COURSE, TYPE I19.0B, AT AN AVERAGE RATE OF 456 LBS/SY	J2	VARIABLE DEPTH AGGREGATE BASE COURSE	T	EARTH MATERIAL

ITEM	DESCRIPTION
U	EXISTING PAVEMENT
W1	WEDGING (SEE WEDGE DETAIL BELOW)
W2	WEDGING (SEE WEDGE DETAIL BELOW)

NOTES :
PAVEMENT EDGES ARE 1:1 UNLESS OTHERWISE NOTED.

PROJECT REFERENCE NO.	SHEET NO.
R-2915B	2A-1

ROADWAY DESIGN ENGINEER
NORTH CAROLINA PROFESSIONAL SEAL 14160 ENGINEER DOUGLAS B. SAUNDERS
7/17/2015
DocuSigned by: Douglas B. Saunders, PE
A0995F1995A147E...

PAVEMENT DESIGN ENGINEER
NORTH CAROLINA PROFESSIONAL SEAL 031484 ENGINEER VLADIMIR G. MITCHEV
7/14/2015
DocuSigned by: Vladimir G. Mitchev
A0995F1995A147E...

CDM Smith
Cama Dressler & McKee
5400 Glenwood Avenue
Suite 300
Raleigh, NC 27612-3228
NC COA No. F-0412

NC DEPARTMENT OF TRANSPORTATION
PAVEMENT MANAGEMENT UNIT
1593 MAIL SERVICE CENTER
RALEIGH, NC 27699-1593

INSET A

–L– (US 221)

MD = MACHINE DIRECTION

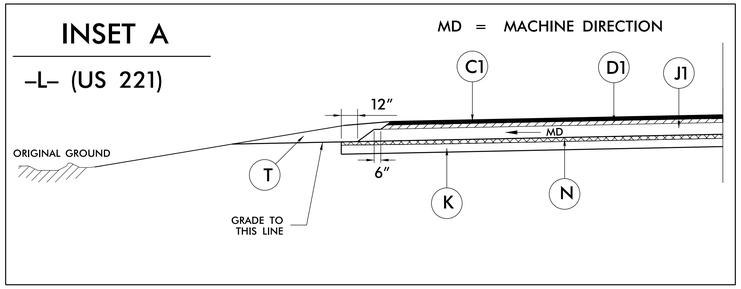

USE GEOTEXTILE FOR PAVEMENT STABILIZATION DETAIL WITH GRADED SHOULDER SECTION (INSET A) AS FOLLOWS:
(THESE LOCATIONS TO BE INVESTIGATED DURING CONSTRUCTION)

–L– STA. 160+50.00 TO STA. 161+50.00 RT
–L– STA. 235+50.00 TO STA. 241+50.00 RT

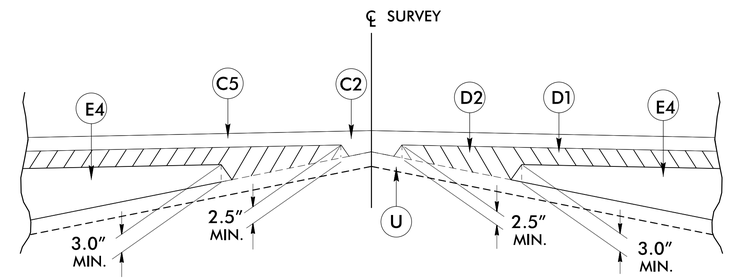

Detail Showing Method of Wedging #1

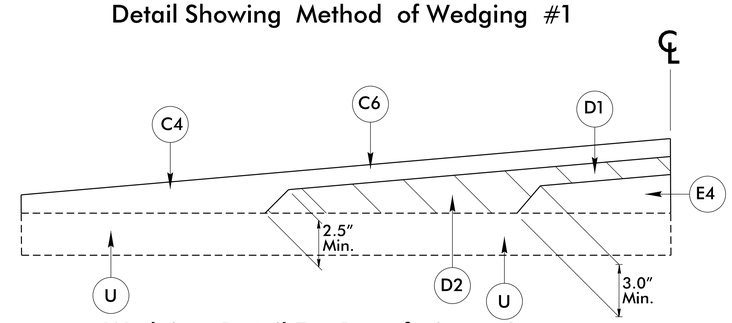

Wedging Detail For Resurfacing #2

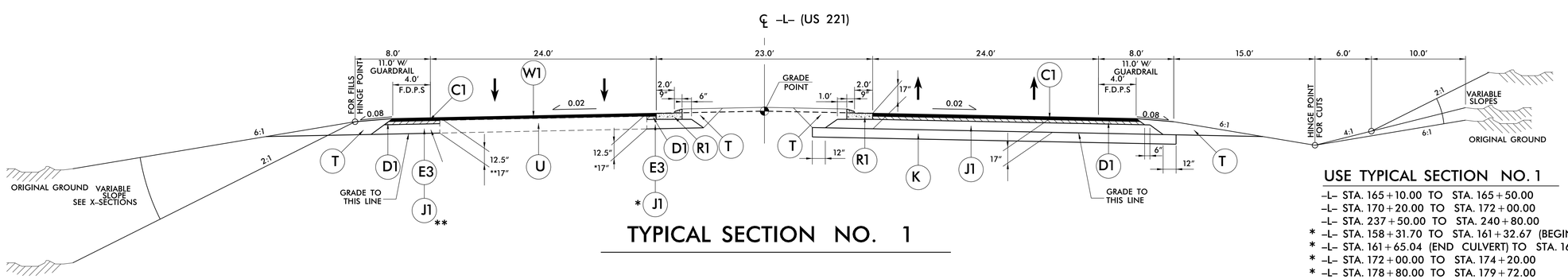

TYPICAL SECTION NO. 1

USE TYPICAL SECTION NO. 1

–L– STA. 165+10.00 TO STA. 165+50.00
–L– STA. 170+20.00 TO STA. 172+00.00
–L– STA. 237+50.00 TO STA. 240+80.00
* –L– STA. 158+31.70 TO STA. 161+32.67 (BEGIN CULVERT)
* –L– STA. 161+65.04 (END CULVERT) TO STA. 165+10.00
* –L– STA. 172+00.00 TO STA. 174+20.00
* –L– STA. 178+80.00 TO STA. 179+72.00
* –L– STA. 186+33.90 TO STA. 189+36.50
** –L– STA. 165+50.00 TO STA. 167+50.00
** –L– STA. 203+80.00 TO STA. 207+61.50
** –L– STA. 240+80.00 TO STA. 241+33.23 (BEG. BRIDGE)

NOTE: SEE INSET A FOR GEOTEXTILE FOR PAVEMENT STABILIZATION DETAIL

REVISIONS

6/26/2015 12:05:10 PM
R:\Roadway\Proj\2915B_PMP_2A-1.DGN
USER: cjhill MANP: 1 TYP: 2A-1.DGN

6/2/99