DocuSign Envelope ID: 4A372C59-93A7-4537-A0FA-646B61BCB51B

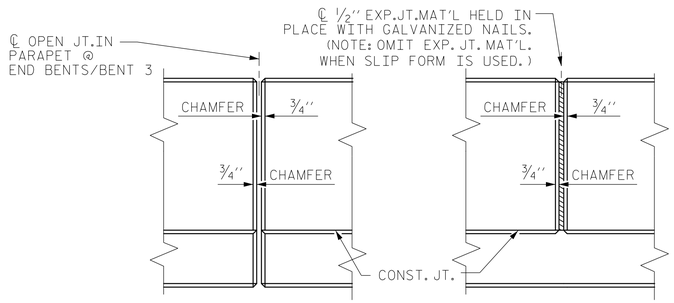

ELEVATION AT EXPANSION JOINTS

DETAILS

NOTES

THE PARAPET IN A CONTINUOUS UNIT SHALL NOT BE CAST UNTIL ALL SLAB CONCRETE IN THAT UNIT HAS BEEN CAST AND HAS REACHED A MINIMUM COMPRESSIVE STRENGTH OF 3,000 PSI.

ALL REINFORCING STEEL IN PARAPETS SHALL BE EPOXY COATED.

THE #5 S1 AND #5 S2 BARS MAY BE SHIFTED SLIGHTLY IN ORDER TO MAINTAIN A 2" MIN. CLEARANCE TO THE 1/2" EXPANSION JT. MATERIAL IN PARAPET

GROOVED CONTRACTION JOINTS 1/2" IN DEPTH SHALL BE TOOLED IN ALL EXPOSED FACES OF THE PARAPET IN ACCORDANCE WITH ARTICLE 825-10(B) OF THE STANDARD SPECIFICATIONS. THE CONTRACTION JOINTS SHALL BE LOCATED AT A SPACING OF 8 TO 10 FEET BETWEEN EXPANSION JOINTS. NO CONTRACTION JOINTS WILL BE REQUIRED FOR SEGMENTS LESS THAN 10 FEET IN LENGTH.

FOR DETAILS OF ELECTRICAL CONDUIT SYSTEM, SEE "CONDUIT & JUNCTION BOX DETAILS" SHEET 2 OF 2.

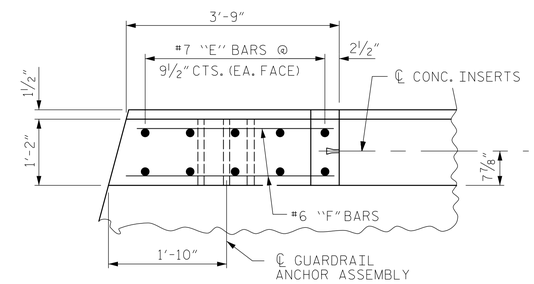

PLAN

BILL OF MATERIAL

FOR CONCRETE PARAPET AND ONE END POST

BAR	NO.	SIZE	TYPE	LENGTH	WEIGHT
B1	32	5	STR.	17'-6"	584
B2	136	5	STR.	29'-8"	4208
B3	24	5	STR.	18'-8"	467
B4	16	5	STR.	19'-8"	328
B5	8	5	STR.	20'-0"	167
B6	8	5	STR.	27'-11"	233
B7	32	5	STR.	22'-9"	759
B8	224	5	STR.	23'-8"	5529
B9	24	5	STR.	23'-3"	582
B10	16	5	STR.	23'-11"	399
B11	24	5	STR.	24'-3"	607
E1	2	7	STR.	2'-6"	10
E2	2	7	STR.	3'-0"	12
E3	2	7	STR.	3'-6"	14
E4	2	7	STR.	4'-0"	16
E5	2	7	STR.	4'-4"	18
F1	2	6	STR.	2'-1"	6
F2	2	6	STR.	3'-4"	10
F3	2	6	STR.	3'-9"	11
S1	1693	5	1	7'-2"	12655
S2	1689	5	2	5'-6"	9689

EPOXY COATED REINFORCING STEEL 36304

CLASS AA CONCRETE 182.2 CU. YDS.

1'-2"X2'-6" CONC. PARAPET 1687.2 LIN FT

BAR TYPES

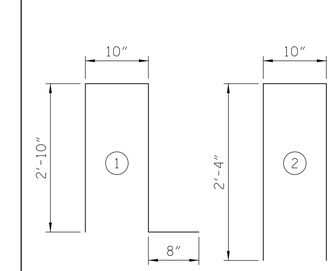

ALL BAR DIMENSIONS ARE OUT-TO-OUT

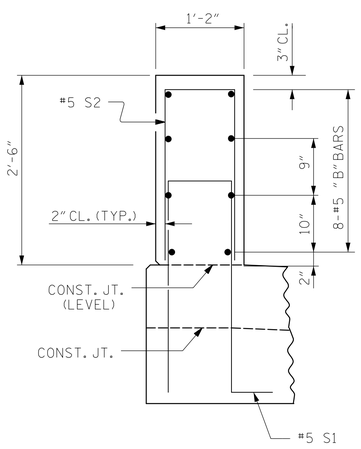

SECTION THRU PARAPET

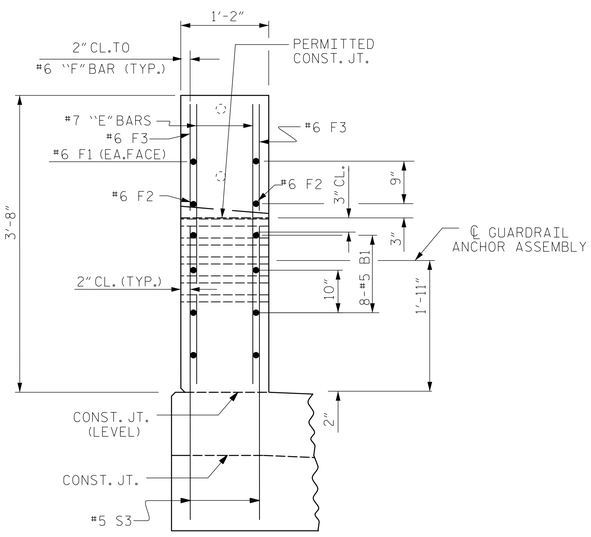

END VIEW

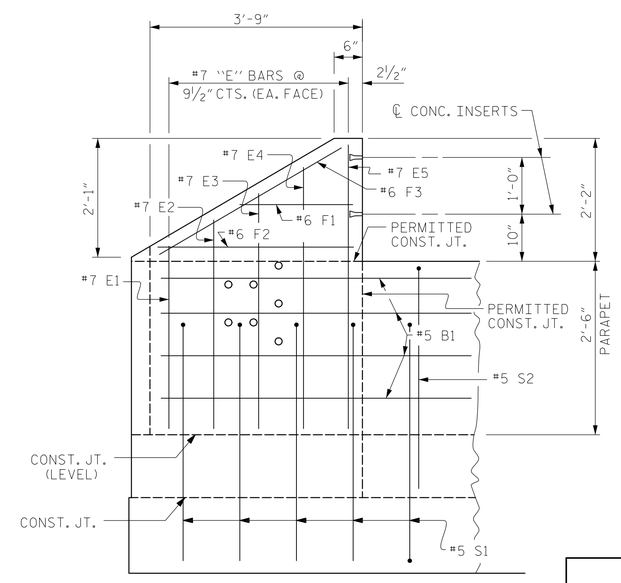

ELEVATION

PARAPET AND END POST FOR TWO BAR RAIL

(ONE REQUIRED AT END BENT 1 LEFT SIDE)

PROJECT NO. U-5008

MECKLENBURG COUNTY

STATION: 20+45.05 -L- P.O.T. = 14+54.24 -Y4- P.O.T.

SHEET 3 OF 3

STATE OF NORTH CAROLINA
DEPARTMENT OF TRANSPORTATION
RALEIGH

CONCRETE PARAPET DETAILS

KCI ASSOCIATES OF NC, P.A.
9741 SOUTHERN PINE BLVD
SUITE J
CHARLOTTE, NC 28273
704-499-9452
NC LICENSE No. C-0764

NORTH CAROLINA PROFESSIONAL SEAL 032954 ENGINEER JARED C. MCGLIN

DocuSigned by: Jared C. McGlin 2/19/2015

REVISIONS							SHEET NO.
NO.	BY:	DATE:	NO.	BY:	DATE:		S-39
1			3				SHEETS
2			4				78

DRAWN BY : R.C. LARSON DATE : 08/09/14
CHECKED BY : K. SU DATE : 09/03/14

2/18/2015 Y:\Drawings\2011 DWGS\B11-11 Sugar Creek Rd - NCDOT\Structures\RFC\SH39_U-5008_SD_BR_3.dgn
DJD