| PROJECT REFERENCE NO. | SHEET NO. |
|---|---|
| U-5008 | UC-18 |

DCN 0400DEL_P30

# CLTWater STANDARD DETAILS

## 2" FIRE LINE SPRINKLER SERVICE WITH DETECTOR METER ASSEMBLY

NOTES:

A. CENTER ANGLE BALL VALVE (11) AND SINGLE ANGLE CHECK VALVE (13) IN METER BOX.
B. LOCK ANGLE BALL VALVE (11) IN OPEN POSITION. PERMANENT LOCK (WITH CMUD SERIAL #) SHALL BE FURNISHED BY CMUD.
C. METER BOX TO BE FLUSH WITH GROUND OR CONCRETE SIDEWALK, GROUND SHALL SLOPE AWAY FROM METER BOX.
D. 5/8 INCH METER SHALL BE INSTALLED IN STANDARD CONCRETE METER BOX PER STD. DETAIL.

| NO. | ALTERNATE DESCRIPTION |
|---|---|
| | WHEN USING HDPE (IPS) POLY IN PLACE OF COPPER TUBING - USE THE FOLLOWING PRODUCTS. |
| 1 | 2" BALL CORPORATION STOP (CC TAPER THREAD x FNPT) |
| 3 | 2" SDR9 HDPE (IPS) POLY WITH STAINLESS STEEL, BRASS, OR BRONZE MNPT ENDS. |
| 4 | BALL STRAIGHT METER VALVE (2 BOLT METER FLANGE x FNPT) MUELLER #B-24337 OR APPROVED EQUAL. |
| 6 | STRAIGHT METER COUPLING - (2 BOLT METER FL x FNPT) FORD #CF31-77, OR APPROVED EQUAL. |
| 7 | BALL CURB VALVE (FNPT x FNPT) |
| 18 | 90° BEND (FNPT x FNPT) |

| NO. | DESCRIPTION |
|---|---|
| 1 | TAPPING SADDLE & 2" BALL CORPORATION STOP (CC TAPER THREAD x CTS COMPRESSION) |
| 2 | STANDARD VALVE BOX ASSEMBLY (TYP) - ALL VALVES (OMIT AT CORPORATION STOP ON SHORT SIDE SERVICE). |
| 3 | 2" TYPE K COPPER TUBING |
| 4 | BALL STRAIGHT METER VALVE - (2 BOLT METER FL x CTS COMPRESSION), MUELLER #B-24335 OR APPROVED EQUAL. |
| 5 | DETECTOR CHECK VALVE - (2 BOLT METER FL x 2 BOLT METER FL), FEBCO SERIES 406, OR APPROVED EQUAL. |
| 6 | STRAIGHT METER COUPLING - (2 BOLT METER FL x CTS COMPRESSION), FORD #CF34-77, OR APPROVED EQUAL. |
| 7 | PROPERTY LINE BALL CURB VALVE - (ALL CTS COMPRESSION), MUELLER #B-25209, FORD #B44-777, OR APPROVED EQUAL. |
| 8 | TEMPORARY 2" BLOW-OFF ASSEMBLY - GALV. STEEL PIPE WITH THREADED COUPLING. |
| 9 | 3/4 INCH 45° COUPLING (MIP TREAD x CTS COMPRESSION), MUELLER #H15529, OR APPROVED EQUAL. |
| 10 | 3/4 INCH TYPE K COPPER OR HDPE (POLY TUBING) SDR 9 (WITH INSERTS). |
| 11 | 5/8 INCH x 3/4 INCH ANGLE BALL VALVE WITH LOCK WINGS (LOCK OPEN) (CTS COMPRESSION x YOKE STAR NUT) |
| 12 | 5/8 INCH METER YOKE BAR |
| 13 | 5/8 INCH x 3/4 INCH SINGLE ANGLE CHECK VALVE (YOKE STAR NUT x CTS COMPRESSION) |
| 14 | 3/4 INCH METER ASSEMBLY WITH AMR ERT TRANSMITTER (BY CMUD) |
| 15 | SOLID POLYETHYLENE (HDPE) METER BOX LID |
| 16 | STANDARD 3/4 INCH CONCRETE METER BOX PER STANDARD DETAIL |
| 17 | SOLID STANDARD CONCRETE BRICKS - DIAGONAL AT CORNERS - 4 EACH |
| 18 | 90 ° BEND (CTS COMPRESSION x FNPT) |
| 19 | AWG #12 GAUGE COPPER TRACER WIRE (THWN) WITH BLUE INSULATION, TERMINATE WITH 24 INCH EXCESS WIRE (COILED) AT METER BOX AND VALVE BOX (TYP) - OMIT WHEN SERVICE LINE IS ALL COPPER TUBING. |

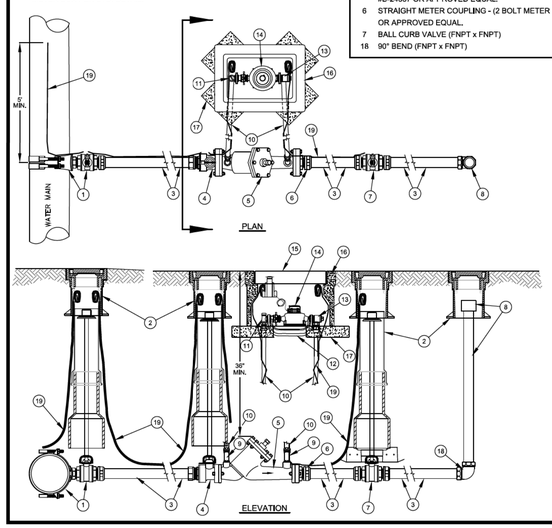


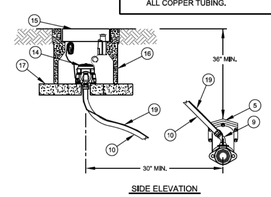


| FIRE SERVICE SIZE | DETECTOR METER SIZE |
|---|---|
| 2" | 5/8" |

NO SCALE
STANDARD NO. 1
REVISION: 1-3
REVISION DATE: 06-05-2011

CHARLOTTE-MECKLENBURG UTILITIES
STANDARD DETAILS
WATER
CHARLOTTE

## VALVE BOX ASSEMBLY INSTALLATION - 12" AND SMALLER VALVES

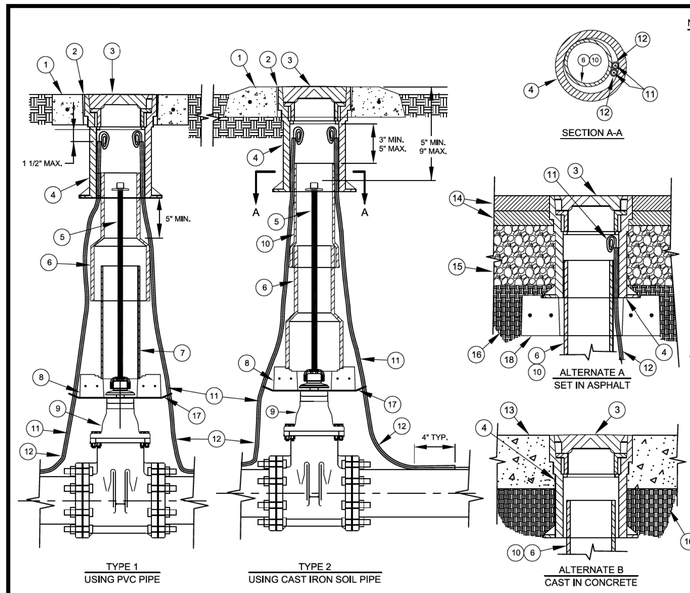


| NO. | DESCRIPTION |
|---|---|
| 1. | 18" x 18" PRECAST ( OR CAST IN PLACE ) CONCRETE PAD OR 24" DIAMETER PRECAST PAD. |
| 2. | NON - SHRINK GROUT - IN ANNULAR SPACE. |
| 3. | VALVE BOX COVER. |
| 4. | TOP SECTION VALVE BOX. |
| 5. | EXTENSION STEM AS REQUIRED. SEE NOTES |
| 6. | BOTTOM SECTION VALVE BOX. |
| 7. | 6" PVC PIPE ( C900 OR SDR 26 ). |
| 8. | PRECAST CONCRETE FOOTING - TYPE II - SEE DETAIL. |
| 9. | GATE VALVE ( OR BALL VALVE, AS APPLICABLE ). |
| 10. | 5" DIA. CAST IRON SOIL PIPE - BELL OF PIPE WILL RECEIVE BOTTOM SECTION OF VALVE BOX. |
| 11. | AWG #12 GAUGE COPPER TRACER WIRE (THWN) WITH BLUE INSULATION, TERMINATE WITH 24 INCH EXCESS WIRE (COILED) AT METER BOX AND VALVE BOX (TYP.) |
| 12. | 1/4" OR 3/8" ID CONDUIT - SDR 9 PEX TUBING - ASTM F 876. |
| 13. | CONCRETE ( ROADWAY, DRIVEWAY OR SIDEWALK ) |
| 14. | ASPHALT PAVEMENT. |
| 15. | COMPACTED AGGREGATE BASE COURSE ( CABC ) OR ASPHALT BASE COURSE. |
| 16. | COMPACTED SUBGRADE. |
| 17. | NONWOVEN GEOTEXTILE FABRIC - 18" x 18" - 2 LAYERS - MIRAFI #140N OR CARTHAGE MILLS # FX - 40HS. |
| 18. | PRECAST CONCRETE FOOTING - TYPE I - SEE DETAIL. |

NOTES:

A. CONCRETE FOOTING TO BE CENTERED OVER VALVE NUT, AND SHALL NOT BEAR ON VALVE BODY.
B. PROVIDE CLEARANCE BETWEEN VALVE FOOTING AND THE VALVE.
C. WHEN OPERATING NUT DEPTH EXCEEDS 3'-0" BELOW FINISHED GRADE, PROVIDE EXTENSION STEM WITH STANDARD 2" SQUARE OPERATING NUT IN TOP SECTION OF VALVE BOX. SEE STANDARD DETAIL.
D. VALVE BOX ASSEMBLY SHALL CONSIST OF NO MORE THAN 3 VERTICAL SECTIONS - 1 TOP SECTION, 1 - BOTTOM SECTION, AND 1 - PIPE RISER SECTION.
E. CONCRETE PADS SHALL NOT BE USED IN PAVEMENT ( CONCRETE OR ASPHALT ), SIDEWALKS OR DRIVEWAYS.

NO SCALE
STANDARD NO. HH
REVISION: 1-4
REVISION DATE: 1-14-2011

CHARLOTTE-MECKLENBURG UTILITIES
STANDARD DETAILS
WATER
CHARLOTTE

## 4" - 10" FIRE LINE SERVICE WITH DETECTOR METER ASSEMBLY

NOTES:

A. ALL FLANGE HARDWARE (BOLT/WASHER/NUT) SHALL BE STAINLESS STEEL - TYPE 304 WITH ANTI-SEIZE COMPOUND.
B. ALL PIPE SHALL BE RESTRAINED JOINT DUCTILE IRON FROM TAP TO PROPERTY LINE VALVE.
C. METER BOX TO BE FLUSH WITH GROUND OR CONCRETE SIDEWALK, GROUND SHALL SLOPE AWAY FROM METER BOX.
D. ALL VALVES SHALL BE OPEN RIGHT - CLOCKWISE, EXCEPT NO. (7).
E. ONE INCH METER SHALL BE INSTALLED IN STANDARD CONCRETE METER BOX PER STD. DETAIL.
F. WRAP TAPPING SLEEVE WITH 2 LAYERS HDPE PLASTIC FILM (HDCLPE PER AWWA C-105) - 4 MILS EACH LAYER - EXTEND HDPE 2 FT. EACH WAY FROM SLEEVE - DUCT TAPE OR ZIP LOCK TIE ENDS.
G. CONCRETE THRUST BLOCKING REQUIRED AT TAPPING SLEEVE.
H. ANGLE BALL VALVE (11) PERMANENT LOCK (WITH CMU SERIAL #) SHALL BE FURNISHED BY CMU.

| FIRE SERVICE SIZE | DETECTOR METER SIZE |
|---|---|
| 4" | 1" |
| 6" | 1" |
| 8" | 1" |
| 10" | 1" |

| NO. | DESCRIPTION |
|---|---|
| 1 | TAPPING SLEEVE & FL x MJ TAPPING VALVE ON EXISTING MAIN. MJ TEE AND MJ GATE VALVE ON NEW MAIN |
| 2 | STANDARD VALVE BOX ASSEMBLY (TYP) - ALL VALVES |
| 3 | RESTRAINED JOINT DUCTILE IRON PIPE |
| 4 | FLANGE x MJ GATE VALVE ON LONG SIDE SERVICES. FLANGE x FL ADAPTER ON SHORT SIDE SERVICE (NOT SHOWN) |
| 5 | DETECTOR CHECK VALVE (FLANGE x FLANGE) |
| 6 | FLANGE x MJ ADAPTOR (OMIT WHEN PROPERTY LINE VALVE (7) IS BOLTED DIRECTLY TO DETECTOR CHECK VALVE (5)) |
| 7 | MJ GATE VALVE (RESTRAINED, OPEN LEFT) AT PROPERTY LINE. (FL x MJ GATE VALVE BOLTED DIRECTLY TO DETECTOR CHECK VALVE (5) - WHEN APPROVED) |
| 8 | 2" PIPE GALV. STEEL (SCH 80), RED BRASS (SCH 40), HDPE (DR 9), OR DUCTILE IRON PIPE, WITH THREADED COUPLING. |
| 9 | CTS x MNPT BRASS STRAIGHT COUPLING (WITH BRASS HEX REDUCING BUSHING - AS REQUIRED) |
| 10 | 1" COPPER TUBE - TYPE K OR HDPE (PLOY TUBING) SDR 9 |
| 11 | 1" ANGLE BALL VALVE WITH LOCK WINGS (LOCK OPEN)(CTS COMPRESSION x YOKE STAR NUT) |
| 12 | 1" METER YOKE BAR |
| 13 | 1" SINGLE ANGLE CHECK VALVE (YOKE STAR NUT x CTS COMPRESSION) |
| 14 | 1" METER ASSEMBLY WITH AMR ERT TRANSMITTER (BY CMU) |
| 15 | SOLID POLYETHYLENE (HDPE) METER BOX LID PER STD. DETAIL |
| 16 | 17" x 28" CONCRETE METER BOX PER STANDARD DETAIL |
| 17 | SOLID STANDARD CONCRETE BRICKS - DIAGONAL AT CORNERS - 4 EACH |
| 18 | MALLEABLE IRON (GALV.) 90 ° BEND (FNPT x FNPT) |
| 19 | AWG #12 GAUGE COPPER TRACER WIRE (THWN) WITH BLUE INSULATION, TERMINATE WITH 24 INCH EXCESS WIRE (COILED) AT METER BOX AND VALVE BOX (TYP.) |

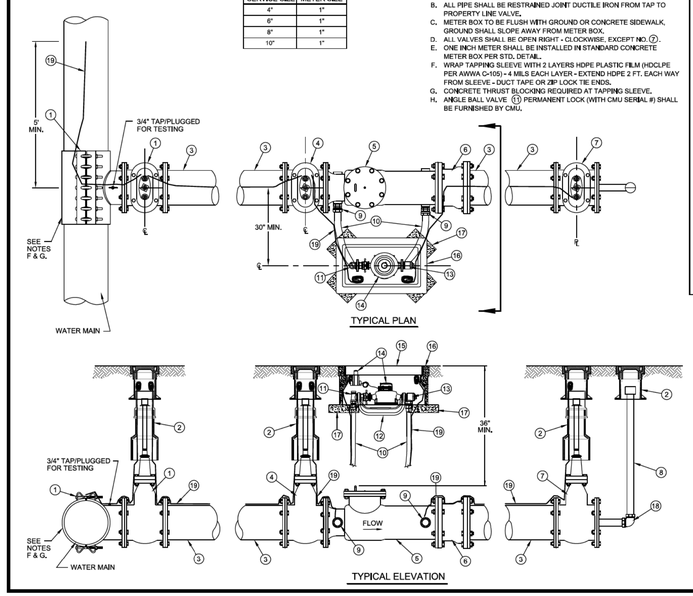


NO SCALE
STANDARD NO. 1
REVISION: 1-1
REVISION DATE: 02-11-2010

CHARLOTTE-MECKLENBURG UTILITIES
STANDARD DETAILS
WATER
CHARLOTTE

## MULTIPLE WATER SERVICES - SCHEMATIC

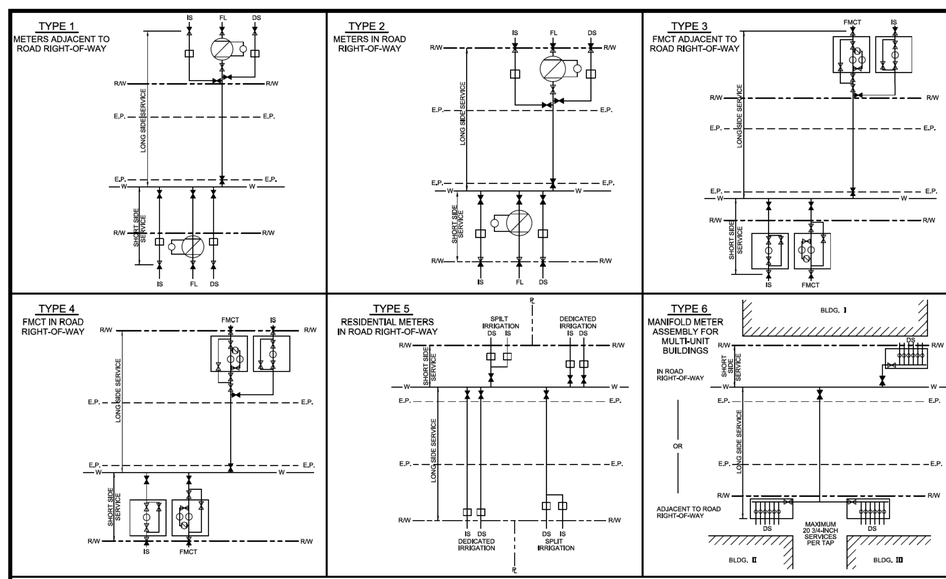


LEGEND / NOTE:

IS = LAWN IRRIGATION SERVICE
DS = DOMESTIC POTABLE WATER SERVICE
FL = FIRE LINE SERVICE WITH DETECTOR METER
FMCT = FACTORY MUTUAL COMPOUND TYPE / FIRE MAIN COMPOUND TYPE

= FOR 3/4" - 2" SERVICE - TAPPING SADDLE AND BALL CORPORATION STOP - CC (TAPER) THREAD.
= FOR 3" - 12" SERVICE - TAPPING SLEEVE AND TAPPING GATE VALVE (FL x MJ) FOR EXISTING WATER MAINS OR TEE AND GATE VALVE (RESTRAINED) FOR NEW MAINS.
= GATE VALVE OR BALL VALVE - SEE METER DETAILS
= PROPERTY LINE VALVE - FOR 3/4"-1" - NOT REQUIRED, FOR 1 1/2"-2" - BALL VALVE CURB STOP, OR FOR 3"-12" - OPEN LEFT MJ GATE VALVE (RESTRAINED).

ALL PIPE SHALL BE RESTRAINED FROM MAIN TO PROPERTY LINE VALVE - 3/4"-2" SHALL BE TYPE K COPPER , 3"-12" SHALL BE DUCTILE IRON.
SEE INDIVIDUAL METER STD DETAILS FOR SPECIFIC COMPONENT REQUIREMENTS.

NO SCALE
STANDARD NO. 1
REVISION: 1-2
REVISION DATE: 08-25-2011

CHARLOTTE-MECKLENBURG UTILITIES
STANDARD DETAILS
WATER
CHARLOTTE

2/6/2015
W:\Transportation\TRIL036.00 (U-5008)\Utilities\permit\280_018_U5008.dgn
jwiles

REV: 2/1/2012