PROJECT REFERENCE NO.	SHEET NO.
U-5008	2C-5

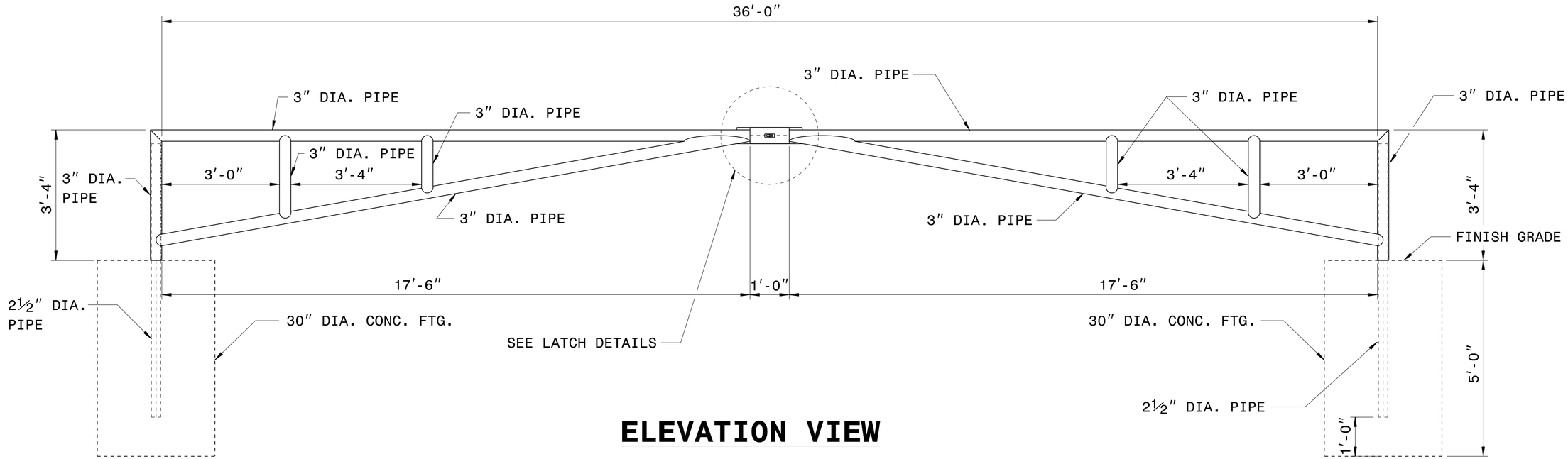

ELEVATION VIEW

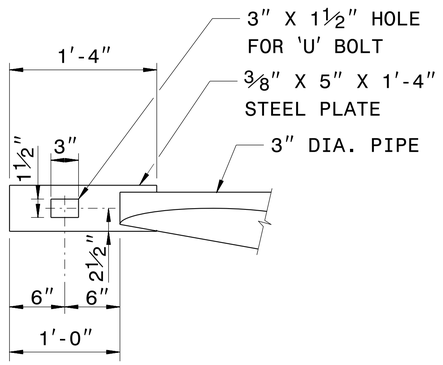

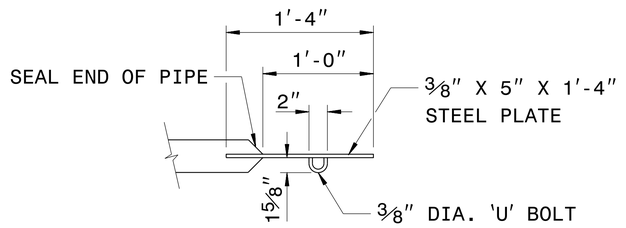

LATCH DETAILS

GENERAL NOTES:
1- ALL STEEL WILL BE ASTM A36 STEEL.
2-¼" FILLET WELDS ON ALL CONNECTIONS.
3-USE CLASS 'B' CONCRETE FOR FOOTINGS.
4-LOCATE GATE AS DIRECTED BY THE ENGINEER.
5-ALL PIPE SIZES ARE O.D.
6-LUBRICATE 2½" DIA. PIPE BEFORE INSTALLING GATE TO INSURE SMOOTH OPERATION.

NORTH CAROLINA PROFESSIONAL SEAL 022966 ENGINEER Joel S. Howerton

DocuSigned by: Joel Howerton 3/3/2015
873F3D17DCDC45F...

CONTRACT STANDARDS & DEVELOPMENT UNIT
STANDARDS AND SPECIAL DESIGN
Office 919-707-6950 FAX 919-250-4119

DETAIL OF STEEL PIPE GATE

ORIGINAL BY: DATE:
MODIFIED BY: rnbritt DATE: 09-08-05
CHECKED BY: DATE:
FILE SPEC.: details/nbritt/misc/steelpipegate.dgn

0400DEL_P30
DCN