PROJECT REFERENCE NO.	SHEET NO.
B-5136	2C-8

STATE OF
NORTH CAROLINA
DEPT. OF TRANSPORTATION
DIVISION OF HIGHWAYS
RALEIGH, N.C.

ENGLISH DETAIL DRAWING FOR

CHAIN LINK FENCE WITH BARBED WIRE

6', 7' AND 8' HEIGHT

SHEET OF

fence4cl

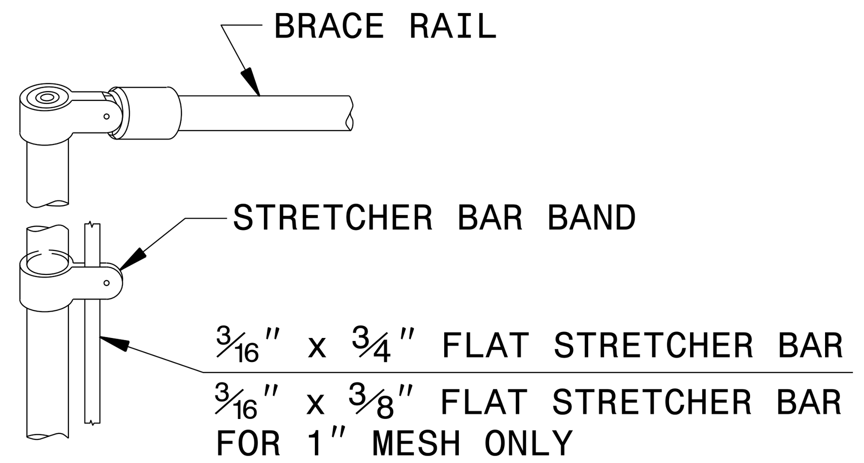

END, GATE OR BRACE POST
WITH STRETCHER BAR ATTACHMENT

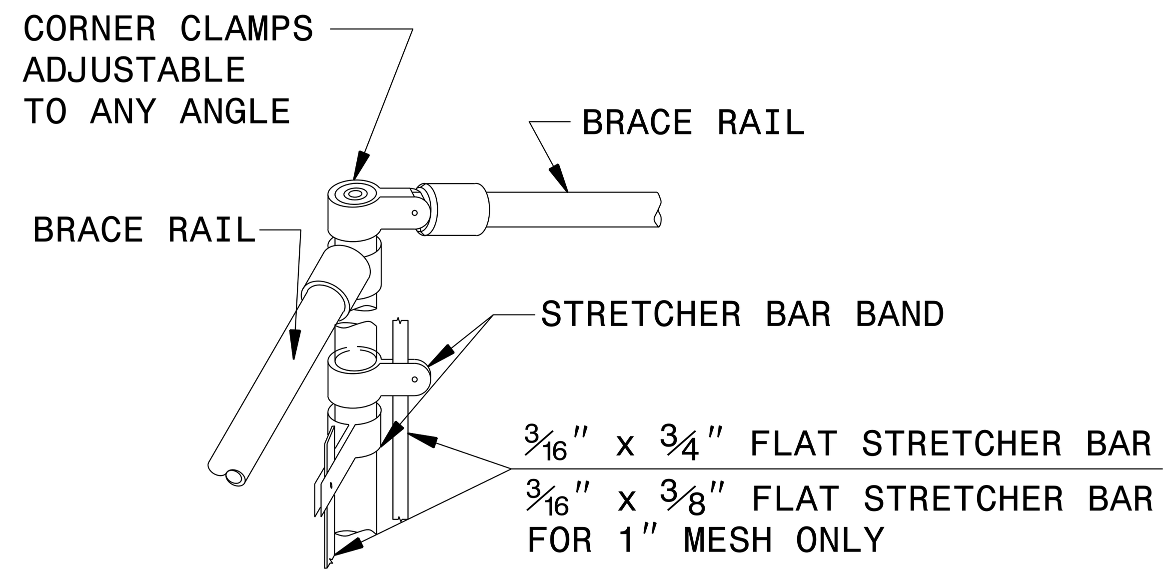

CORNER WITH STRETCHER
BAR ATTACHMENT

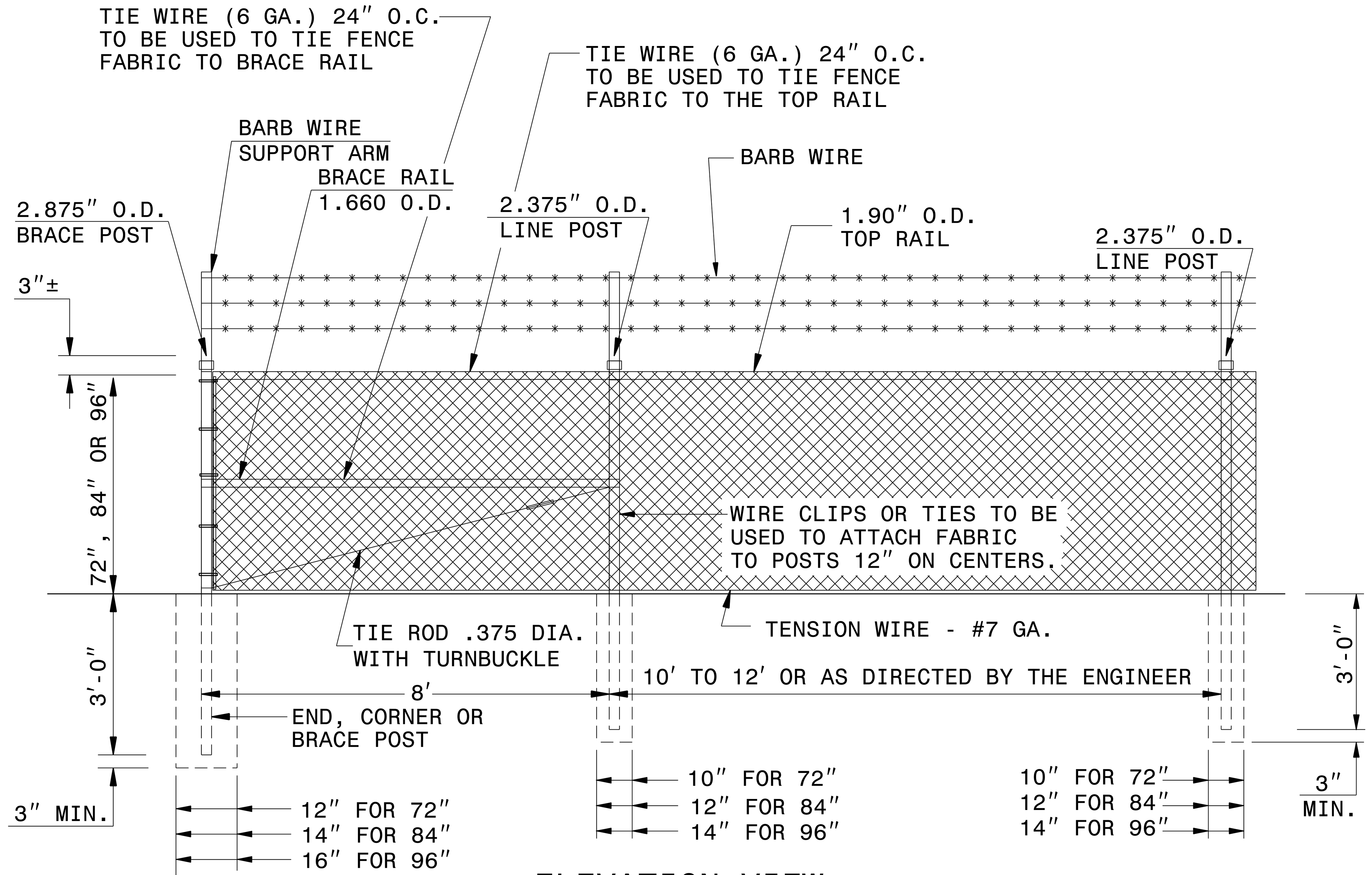

ELEVATION VIEW

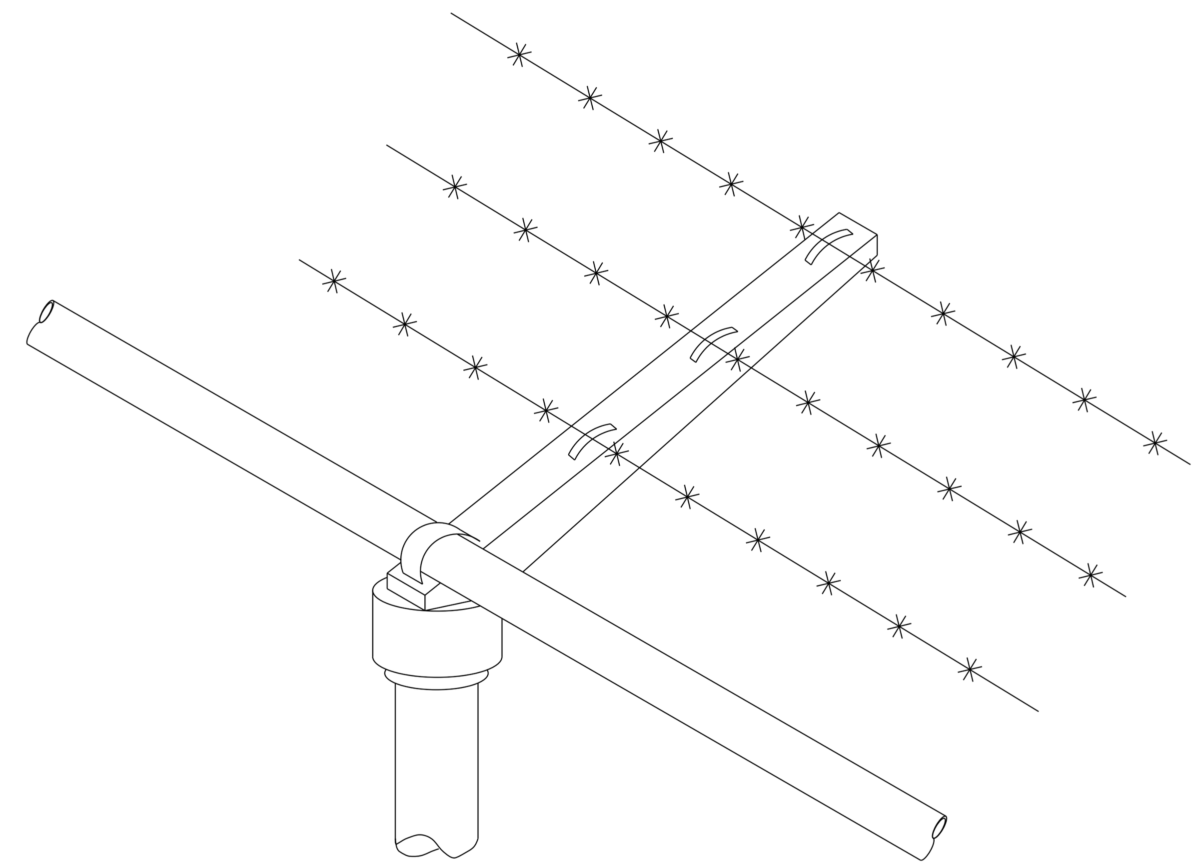

BARBED WIRE FENCE
SUPPORT ARM

STATE OF
NORTH CAROLINA
DEPT. OF TRANSPORTATION
DIVISION OF HIGHWAYS
RALEIGH, N.C.

ENGLISH DETAIL DRAWING FOR

CHAIN LINK FENCE WITH BARBED WIRE

6', 7' AND 8' HEIGHT

SHEET OF

fence4cl

SEE 866.01 FOR CHAIN LINK FENCE
INSTALLATION

NORTH CAROLINA PROFESSIONAL SEAL 022966 ENGINEER Joel S. Howerton

DocuSigned by:
Joel Howerton
873F3D17DCDC45F...
2/19/2015

CONTRACT STANDARDS AND DEVELOPMENT UNIT
Office 919-707-6950 FAX 919-250-4119

SEE PLATE FOR TITLE

ORIGINAL BY: **N.T. KEGLERS** DATE: **MAR.11, 1996**
MODIFIED BY: DATE:
CHECKED BY: DATE:
FILE SPEC.:

$$$$$$SYSTIME$$$$$ $$$$$$$$$$$DGN$$$$$$$$$$$$$$$$ $$$$USERNAME$$$$