PROJECT REFERENCE NO.	SHEET NO.
B-5136	2C-4

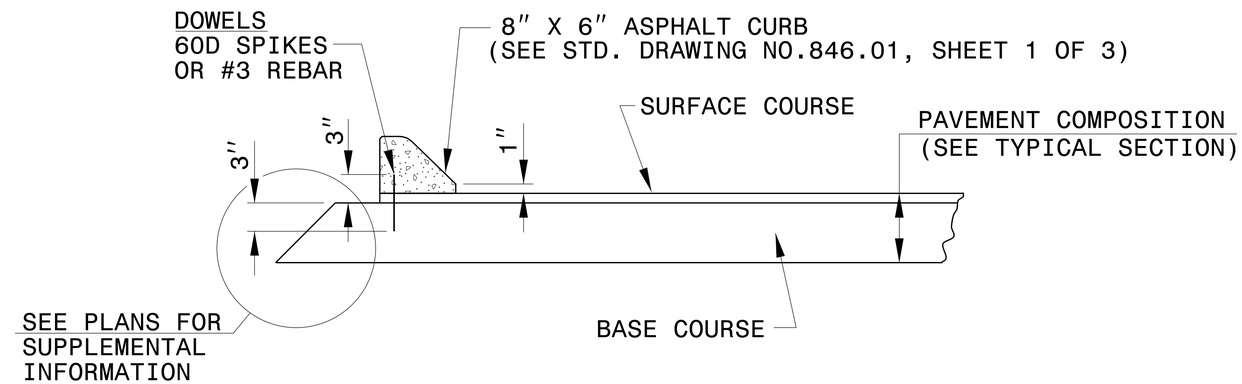

ELEVATION

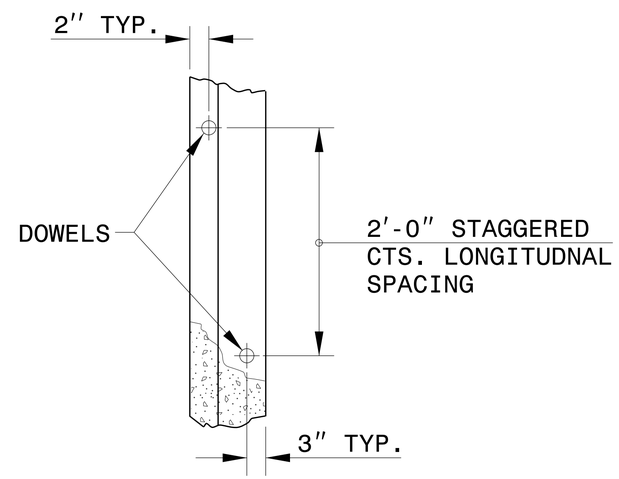

PLAN

DETAIL OF ASPHALT CURB

NORTH CAROLINA PROFESSIONAL SEAL 022966 ENGINEER Joel S. Howerton

DocuSigned by: Joel Howerton
873F3D17DCDC45F...

1/21/2015

CONTRACT STANDARDS AND DEVELOPMENT UNIT
Office 919-707-6950 FAX 919-250-4119

DETAIL OF TEMPORARY ASPHALT CURB

ORIGINAL BY: T.S.S. DATE: NOV.1997
MODIFIED BY: T.S.S. DATE: FEB.2000
CHECKED BY: DATE:
FILE SPEC.: usr/details/stand/asphalt curb.dgn

$$$$USERNAME$$ $$$$SYSTIME$$$$
$$$$USERNAME$$ $$$$DGNFILE$$$$