DocuSign Envelope ID: D0D9F944-53AD-4872-BEF1-6934BBEBCCC0

PAVEMENT SCHEDULE	
C1	80mm TYPE S9.5B
C2	VAR. DEPTH TYPE S9.5B
C3	50mm TYPE S9.5C
C4	80mm TYPE S9.5C
C5	VAR. DEPTH TYPE S9.5C
D1	80mm TYPE I19.0C
D2	100mm TYPE I19.0C
D3	VAR. DEPTH TYPE I19.0C
E1	100mm TYPE B25.0B
E2	VAR. DEPTH TYPE B25.0B
E3	180mm TYPE B25.0C
E4	120mm TYPE B25.0C
E5	310mm TYPE B25.0C
E6	130mm TYPE B25.0C
E7	210mm TYPE B25.0C
E8	VAR. DEPTH TYPE B25.0C
G	200mm CEMENT TREATED ABC
K	CEMENT /LIME STABILIZATION
N	GEOTEXTILE FOR PAV'T STABILIZATION
T	EARTH MATERIAL
U	EXISTING PAVEMENT
W1	VAR. DEPTH ASPHALT PAVEMENT
W2	VAR. DEPTH ASPHALT PAVEMENT
W3	VAR. DEPTH ASPHALT PAVEMENT
W4	VAR. DEPTH ASPHALT PAVEMENT
RS	RUMBLE STRIPS

ALL PAVEMENT EDGE SLOPES ARE 1:1 UNLESS SHOWN OTHERWISE

ICA Engineering
5121 Kingdom Way, Suite 100
Raleigh, NC 27607
NC License No: P-0208

METRIC

5m 0 10m

CONST.REV.

R/W REV.

PROJECT REFERENCE NO.	SHEET NO.
R-2413CA	2A-3
R /W SHEET NO.	

ROADWAY DESIGN ENGINEER
NORTH CAROLINA PROFESSIONAL SEAL 22606 ENGINEER DAVID C. WALLER
DocuSign David C. Waller 3/23/2015
89AD3F7156C5435...

PAVEMENT DESIGN ENGINEER
NORTH CAROLINA PROFESSIONAL SEAL 013368 ENGINEER DON-CHI CHEN
DocuSign Don-Chi Chen 3/24/2015
F5A34BED43D5420...

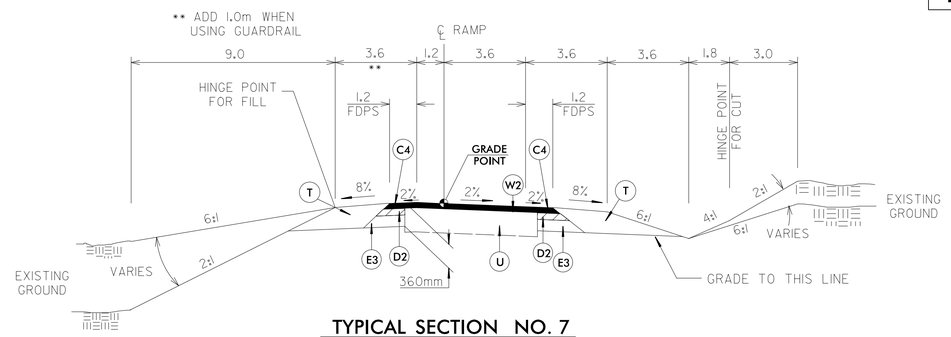

TYPICAL SECTION NO. 7
(ONE LANE RAMP)

–NC68_SB–
STA. 10+00.000 TO STA. 11+45.000

–NC68_NB–
STA. 10+00.000 TO STA. 15+07.038 (GORE)

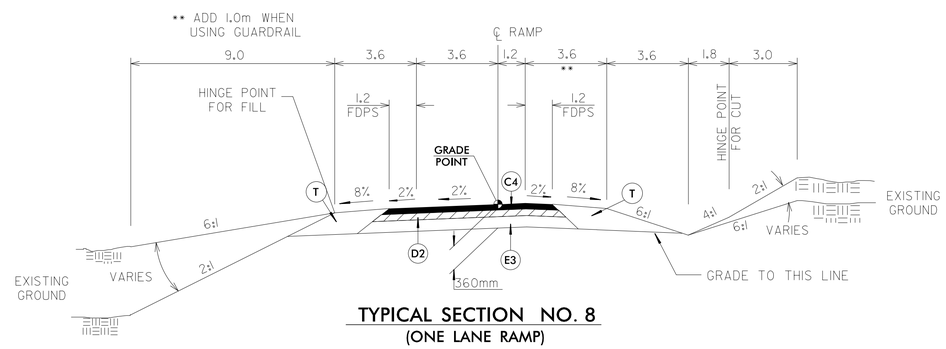

TYPICAL SECTION NO. 8
(ONE LANE RAMP)

–NC68_SB–
STA. 11+45.000 TO STA. 14+14.054 (GORE)

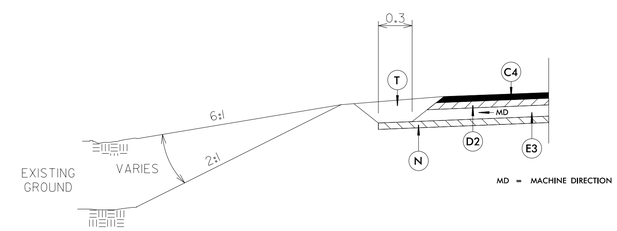

INSET B
USE GEOTEXTILE FOR PAVEMENT STABLILIZATION DETAIL FOR TRENCH SHOULDER SECTION AS FOLLOWS:

–NC68_SB–

(THESE LOCATIONS TO BE INVESTIGATED DURING CONSTRUCTION)
STA. 13+43 TO STA. 15+52

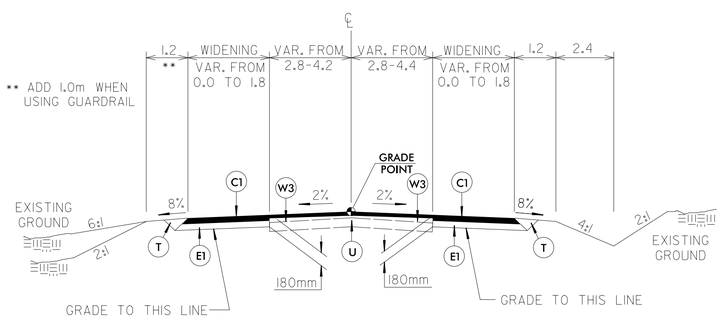

TYPICAL SECTION NO. 9

–Y16A– (PRICE FARM RD.) & –Y16B– (NEWNAM RD.)
–Y16A– STA. 10+92.331 TO STA. 11+14.872
–Y16B– STA. 10+04.503 TO STA. 10+55.267

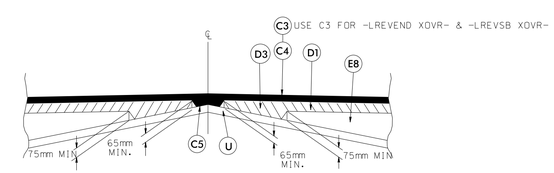

DETAIL SHOWING METHOD OF WEDGING (W1)

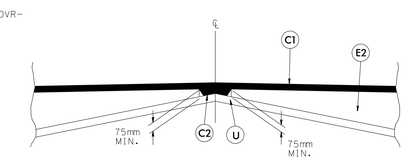

DETAIL SHOWING METHOD OF WEDGING (W3)

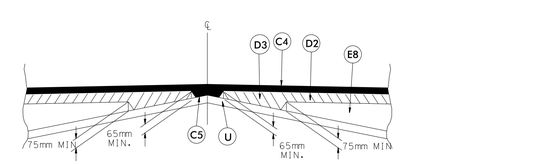

DETAIL SHOWING METHOD OF WEDGING (W2)

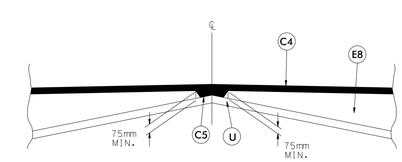

DETAIL SHOWING METHOD OF WEDGING (W4)

3/23/2015
R:\Roadway\Proj\R2413CA_rdy_typ.dgn
bkarpinski
Ed Tedder, Eric Mc Neill