PROJECT TYPICAL DETAILS

PREPARED IN THE OFFICE OF:
THE WOOTEN COMPANY
ENGINEERING | PLANNING | ARCHITECTURE
120 North Boylan Avenue Raleigh NC 27603-1423
919.828.0531 fax 919.834.3589
License Number: F-0176

VERTICAL SCALE 5' 0 5' 10'
HORIZONTAL SCALE 25' 0 25' 50'

ONLY WATER LINE CONSTRUCTION SHOWN ON THIS SHEET

PROJECT REFERENCE NO.	SHEET NO.
R-2514C	UC-3B

DESIGNED BY: BJPO
DRAWN BY: TK
CHECKED BY: BJPO
APPROVED BY: MDS
REVISED:

NORTH CAROLINA DEPARTMENT OF TRANSPORTATION

UTILITIES ENGINEERING SEC.
PHONE: (919) 707-6690
FAX: (919) 250-4151

NORTH CAROLINA PROFESSIONAL SEAL 38689 ENGINEER BRIAN J. P. OSCHWALD
Digitally signed by Brian Oschwald
DocuSigned by:
2/3/2015

UTILITY CONSTRUCTION PLANS ONLY

UTILITY CONSTRUCTION

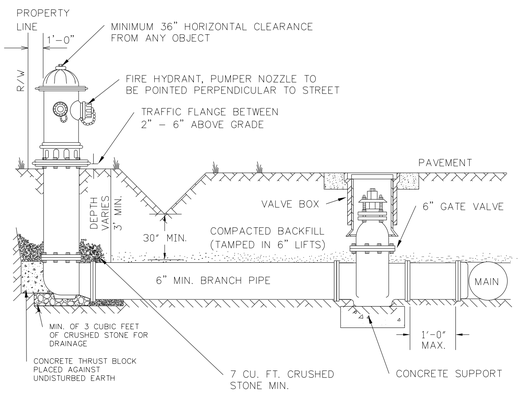

NOTES:
1. FIRE HYDRANT MANUFACTURER SHALL BE AS REQUIRED BY PROJECT SPECIFICATIONS.
2. FIRE HYDRANT SHALL BE INSTALLED USING HYDRANT TEE.
3. BRANCH PIPE SHALL BE DUCTILE IRON.
4. FIRE HYDRANTS WILL BE INSTALLED IN TRUE VERTICAL POSITION.
5. ALL JOINTS ON FIRE HYDRANT ASSEMBLIES SHALL BE RESTRAINED.
6. ALL FIRE HYDRANTS SHALL BE LOCATED WITHIN DEDICATED STREET RIGHT-OF-WAY.

ANYTIME SITE WORK, CONSTRUCTION, ROAD WORK, OR ANY OTHER WORK CHANGES THE GRADE OF THE FIRE HYDRANT, THE CONTRACTOR IS RESPONSIBLE FOR ADJUSTING THE FIRE HYDRANT TO STAY WITHIN COMPLIANCE.

REVISION: 4) REVISED NOTE 5 REGARDING JOINT RESTRAINTS - 03/14/2012
REVISION: 3) REVISED NOTES 1,7,&8 REGARDING STANDARD PRACTICE, MANUFACTURERS, AND EQUIPMENT - 03/14/2012

FIRE HYDRANT ASSEMBLY SHOULDER / DITCH SECTION

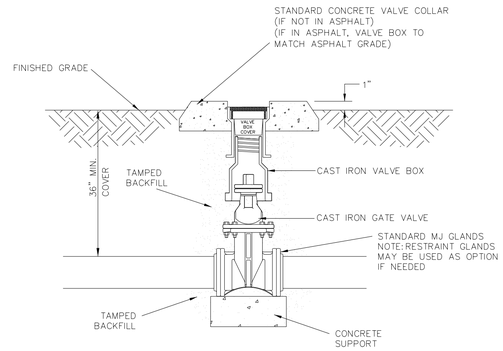

REVISION: 2) REMOVED VALVE BOX NOTE - 03/14/2012
REVISION: 1) ADDED CONCRETE SUPPORT UNDERNEATH VALVE - 03/14/2012

INLINE VALVE DETAIL

NOTE: CONCRETE VALVE COLLAR REQUIRED ON ALL VALVES.

APPROVED METHOD FOR EXTENSION OF VALVE BOX

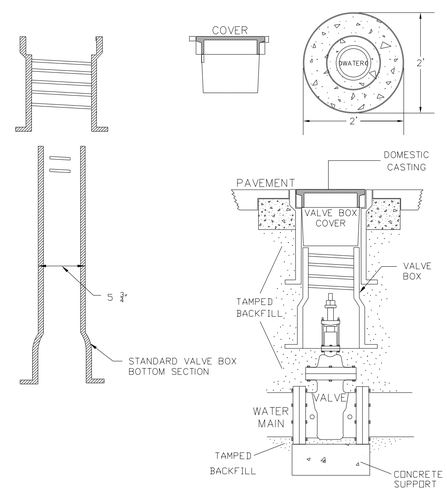

REVISION: 2) MODIFIED VALVE BOX NOTE - 03/14/2012
REVISION: 1) ADDED CONCRETE SUPPORT UNDERNEATH VALVE - 03/14/2012

VALVE BOX INSTALLATION

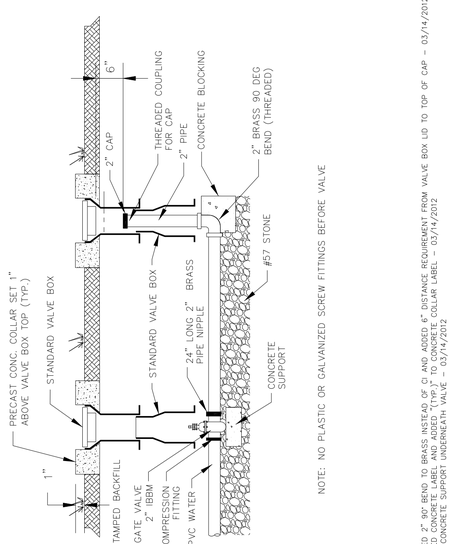

NOTE: NO PLASTIC OR GALVANIZED SCREW FITTINGS BEFORE VALVE

REVISION: 3) CHANGED 2" 90° BEND TO BRASS INSTEAD OF G AND ADDED 6" DISTANCE REQUIREMENT FROM VALVE BOX LID TO TOP OF CAP - 03/14/2012
REVISION: 2) REMOVED CONCRETE LABEL AND ADDED "TYP." TO CONCRETE COLLAR LABEL - 03/14/2012
REVISION: 1) ADDED CONCRETE SUPPORT UNDERNEATH VALVE - 03/14/2012

2-INCH BLOW OFF ASSEMBLY

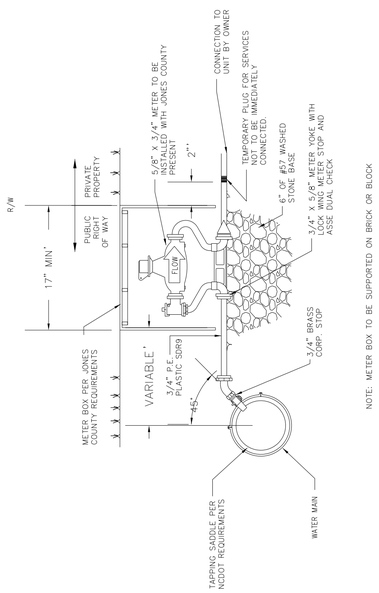

NOTE: METER BOX TO BE SUPPORTED ON BRICK OR BLOCK

REVISION: 3) REVISED DETAIL TITLE - 03/14/2012
REVISION: 2) REMOVED CHECK VALVE DOWNSTREAM OF METER - 03/14/2012
REVISION: 1) ADDED WHERE STAND BASE UNDERNEATH VALVE - 03/14/2012

3/4" TO 1" SERVICE CONNECTION AND METER

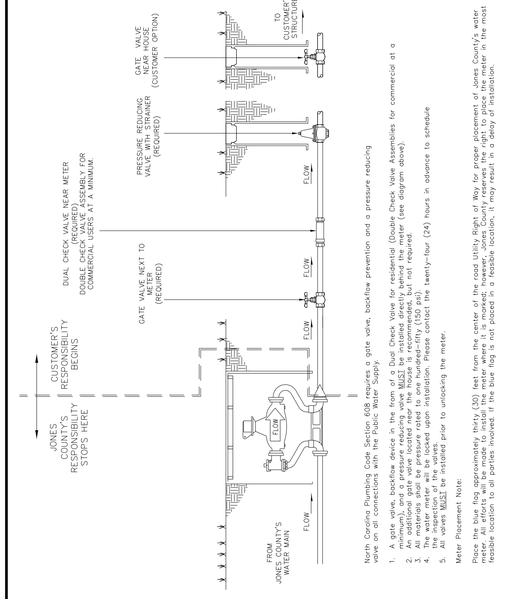

North Carolina Plumbing Code Section 608 requires a gate valve, backflow prevention and a pressure reducing valve on the customer's side of the meter.

1. A gate valve backflow device in the form of a Dual Check Valve for residential (Double Check Valve Assemblies for commercial at a minimum), and a pressure reducing valve MUST be installed directly behind the meter (see diagram above).
2. An additional gate valve located near the house is recommended, but not required.
3. The customer is responsible for the upkeep and maintenance of the backflow device.
4. The water meter will be locked upon installation. Please contact the twenty-four (24) hours in advance to schedule the meter to be unlocked.
5. All valves MUST be installed prior to unlocking the meter.

Meter Placement Note:

Place the blue flag approximately thirty (30) feet from the center of the road Utility Right of Way for proper placement of Jones County's water meter. All efforts will be made to install the meter where it is marked; however, Jones County reserves the right to place the meter in the most feasible location to all parties involved. If the blue flag is not placed in a feasible location, it may result in a delay of installation.

REVISION: 1) REVISED DETAIL TITLE - 03/14/2012

3/4" TO 1" METER INSTALLATION

5/14/99

$$$$$$SYSTIME$$$$$$
$$$$$$SYSDATE$$$$$$
$$$$$$LPLOT$$$$$$
$$$$$$DGN$$$$$$