5/14/99

PROJECT TYPICAL DETAILS

PREPARED IN THE OFFICE OF:

THE WOOTEN COMPANY
ENGINEERING | PLANNING | ARCHITECTURE
120 North Boylan Avenue Raleigh NC 27603-1423
919.828.0531 fax 919.834.3589
License Number: F-0115

PROJECT REFERENCE NO.	SHEET NO.
R-2514C	UC-3C

DESIGNED BY: BJPO
DRAWN BY: TK
CHECKED BY: BJPO
APPROVED BY: MDS
REVISED:

NORTH CAROLINA DEPARTMENT OF TRANSPORTATION

UTILITIES ENGINEERING SEC.
PHONE: (919) 707-6690
FAX: (919) 250-4151

VERTICAL SCALE 5' 0 5' 10'
HORIZONTAL SCALE 25' 0 25' 50'

ONLY WATER LINE CONSTRUCTION SHOWN ON THIS SHEET

NORTH CAROLINA PROFESSIONAL SEAL 38689 ENGINEER BRIAN J. P. OSCHWALD
Digitally signed by Brian Oschwald
BOSTI\OASDSMAIN2
4/13/2015

UTILITY CONSTRUCTION PLANS ONLY

UTILITY CONSTRUCTION

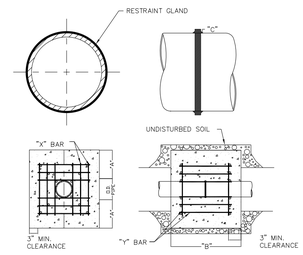

REINFORCING REQUIREMENTS

I.D. PIPE	REBAR SIZE	"X" BAR LENGTH	"X" BAR WEIGHT	"Y" BAR LENGTH	"Y" BAR WEIGHT	NO. REQUIRED
6" - 36"	#5	2'-2"+ O.D. PIPE	1.043 LBS/FT	1'-1"	1.1 LBS. EACH	X-24, Y-12
48" & greater	#6	3'-0"+ O.D. PIPE	1.502 LBS/FT	1'-3"	1.9 LBS. EACH	X-24, Y-12

THRUST COLLAR, AND THRUST SCHEDULE

I.D. PIPE	"A"	"B"	"C"-6"-16", 20"-24", 30"-36", 48"
6" - 36"	1'-4"	1'-7"	2" 3" 4"
48" & greater	1'-8"	1'-9"	6"

NOTES:
1. CONCRETE SHALL BE 3000 PSI AND TRANSIT MIXED.
2. REINFORCING BARS SHALL BE DEFORMED AND TIED TOGETHER.
3. TRENCH BOTTOM WIDTH IN VICINITY OF THRUST BLOCK INSTALLATION SHALL BE THE MINIMUM WIDTH AS SHOWN ON STANDARD EMBEDMENT DETAIL.
4. BACKFILL TAMPED IN 6" LIFTS PER STANDARD EMBEDMENT DETAIL.

REVISION: 1) CHANGED THRUST COLLAR TO RESTRAINT GLAND – 03/14/2012

THRUST BLOCKING

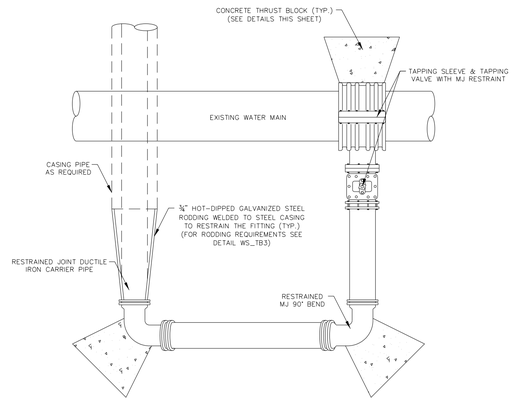

NOTE:
1. ALL JOINTS THROUGHOUT ENTIRE ASSEMBLY SHALL BE RESTRAINED.
2. MUST USE DUCTILE IRON EYE BOLTS WHERE NECESSARY.
3. ANGLE FITTINGS AS NECESSARY.

BACKSIDE TAP

NCDOT Parts List
1 - 66" Blue with Black Cap Marker Post OR
1 - 66" Blue with White Cap, 2 inside Terminal Test Station
1 - Cap Lock for Test Station
3 - Custom Decals, as shown below

NOTES:
The Anchor Flaps shall be extended prior to burial of the post. Soil shall be compacted during placement of marker post.

Install above-ground utility markers at horizontal bends, main-line valve boxes (not within 10 feet of a fire hydrant assembly branch), ends of directional bores, bank edge of all channels crossed by directional bores, each side of a roadway crossing, and along the piping alignment. The maximum spacing for the above-ground utility markers shall be 500 linear feet. In locations where there are multiple horizontal bends in close proximity, one marker will be sufficient to demonstrate the change in direction. Utility markers designed to provide access to tracer wire shall be installed at every third marker, or every 1000 feet of pipe, whichever is lesser. Tracer wire accessible above-ground utility markers shall also be installed at ends of directional bores.

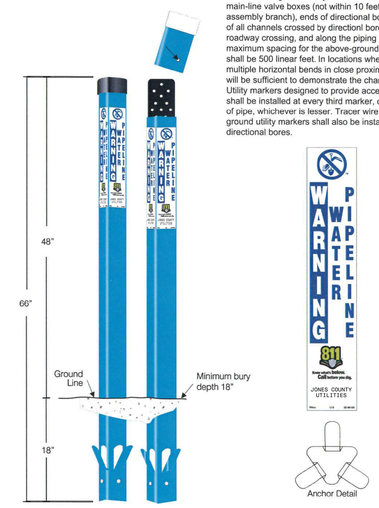

STANDARD UTILITY MARKER FOR WATER MAIN

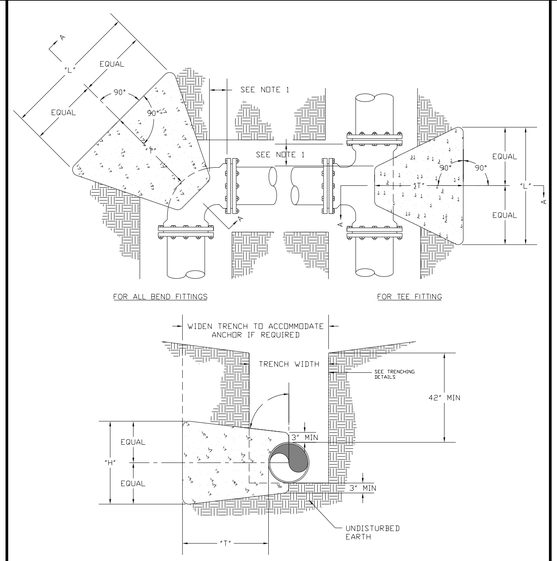

NOTES:
1. CONCRETE BLOCKING IS TO BE FORMED TO ENSURE ACCESSIBILITY TO FITTINGS AND POURED AGAINST UNDISTURBED EARTH.
2. ALL FITTINGS SHALL BE WRAPPED IN POLYETHYLENE TO PREVENT CONCRETE FROM CONTACTING FITTINGS, BOLTS, OR ENDS OF MECHANICAL JOINT BENDS.
3. CONCRETE TO BE MINIMUM 3,000 PSI @ 28 DAYS.
4. WHEN SACKRETE IS TO BE USED, IT SHALL BE PROPERLY MIXED PER MANUFACTURER SPECIFICATIONS.
5. FOR REQUIRED DIMENSIONS, SEE THRUST BLOCKING CHART THIS SHEET

REVISION: 1) REPLACED WS_TB1 FROM OCTOBER, 2007 REVISION – 03/14/2012

THRUST BLOCKING

TEST PRESSURE = 150 PSI

PIPE SIZE	TYPE FITTING	DIMENSIONS (FT) "L"	"H"	"T"	VOLUME CONCRETE CU. YD.
<4 INCHES	11 1/4°	----	----	----	----
	22 1/2°	1.00	1.00	1.50	0.06
	45°	1.00	1.00	1.50	0.06
	90°	1.00	1.00	2.50	0.09
	TEE	1.00	1.00	2.00	0.07
4 INCHES	11 1/4°	1.00	1.00	2.50	0.09
	22 1/2°	1.00	1.00	2.50	0.09
	45°	1.00	1.00	2.50	0.09
	90°	1.50	1.50	2.50	0.15
	TEE	1.50	1.50	2.00	0.12
6 INCHES	11 1/4°	1.50	1.50	2.50	0.15
	22 1/2°	1.50	1.50	2.50	0.15
	45°	1.50	1.50	2.50	0.15
	90°	2.00	2.00	3.00	0.28
	TEE	2.00	2.00	2.50	0.23
8 INCHES	11 1/4°	2.00	2.00	2.50	0.23
	22 1/2°	2.00	2.00	2.50	0.23
	45°	2.00	2.00	2.75	0.25
	90°	3.00	2.00	3.00	0.39
	TEE	3.00	2.00	2.50	0.32
12 INCHES	11 1/4°	2.00	2.00	3.00	0.28
	22 1/2°	2.00	2.00	3.00	0.28
	45°	3.00	2.50	3.00	0.47
	90°	4.50	3.00	3.50	0.94
	TEE	4.50	3.00	3.00	0.81
16 INCHES	11 1/4°	2.00	2.00	3.00	0.28
	22 1/2°	3.00	2.00	3.00	0.39
	45°	4.00	3.00	3.50	0.84
	90°	6.50	3.50	3.50	1.54
	TEE	6.50	3.50	3.00	1.32

TEST PRESSURE = 200 PSI

PIPE SIZE	TYPE FITTING	DIMENSIONS (FT) "L"	"H"	"T"	VOLUME CONCRETE CU. YD.
<4 INCHES	11 1/4°	1.00	1.00	1.00	0.04
	22 1/2°	1.00	1.00	1.50	0.06
	45°	1.00	1.00	1.50	0.06
	90°	1.50	1.50	2.50	0.15
	TEE	1.50	1.50	2.00	0.12
4 INCHES	11 1/4°	1.00	1.00	2.50	0.09
	22 1/2°	1.00	1.00	2.50	0.09
	45°	1.50	1.50	2.50	0.15
	90°	1.50	1.50	2.50	0.15
	TEE	1.50	1.50	2.00	0.12
6 INCHES	11 1/4°	1.50	1.50	2.50	0.15
	22 1/2°	1.50	1.50	2.50	0.15
	45°	1.50	1.50	2.50	0.15
	90°	2.50	2.00	3.00	0.33
	TEE	2.50	2.00	2.50	0.28
8 INCHES	11 1/4°	2.00	2.00	2.50	0.23
	22 1/2°	2.00	2.00	2.50	0.23
	45°	2.00	2.00	2.75	0.23
	90°	4.00	2.00	3.00	0.50
	TEE	4.00	2.00	2.50	0.42
12 INCHES	11 1/4°	2.00	2.00	3.00	0.28
	22 1/2°	3.00	2.00	3.00	0.39
	45°	4.00	2.50	3.00	0.61
	90°	5.50	3.00	3.50	1.13
	TEE	5.50	3.00	3.00	0.97
16 INCHES	11 1/4°	2.00	2.00	3.00	0.28
	22 1/2°	4.00	2.00	3.00	0.50
	45°	5.50	3.00	3.50	1.13
	90°	7.50	4.00	3.50	2.01
	TEE	7.50	4.00	3.00	1.72

CHART NOTES:
1. IF BLOCKING EXCAVATION IS IN LIGHTLY COMPACTED FILL AREAS, OR IN AREAS WHERE BOULDERS OR STUMPS HAVE BEEN REMOVED, BLOCKING SIZE MUST BE RE-SIZED FOR THE SPECIFIC LOCATION/CIRCUMSTANCE BY A NC LICENSED PROFESSIONAL ENGINEER.
2. BLOCKING SIZES SHOWN IN THESE TABLES ASSUME THE FOLLOWING:
   a. BLOCKING IS CONSTRUCTED IN RESIDUAL SOILS AS SHOWN IN DETAIL
   b. SOIL BEARING PRESSURE = 2000 PSF
   c. VELOCITY OF FLOW = 15 FPS
3. THIS DETAIL NOT APPLICABLE TO REDUCING BENDS.
4. NEITHER THE WEIGHT OF THE CONCRETE BLOCKING NOR FRICTION BETWEEN CONCRETE BLOCKING AND SOIL WAS ADDED INTO BLOCKING SIZES COMPUTATION. THEREFORE, BLOCKING SIZE IS CONSERVATIVE.

REVISION: 1) REPLACED WS_TB2 FROM OCTOBER, 2007 REVISION – 03/14/2012

THRUST BLOCKING

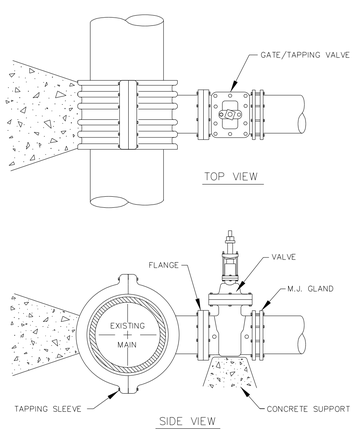

NOTES:
1. CONCRETE SHALL NOT CONTACT GLANDS, BOLTS OR ENDS OF MECHANICAL BOLTS, OR ENDS OF MECHANICAL JOINT FITTINGS. TAPPING SLEEVE AND BOTTOM OF VALVE SHALL BE WRAPPED IN POLYETHYLENE.
2. SEE STANDARD THRUST BLOCK TABLE FOR AREA OF CONCRETE REQUIRED THIS SHEET.
3. TAPPING SLEEVE SHALL BE TESTED IN ACCORDANCE WITH JONES COUNTY REQUIREMENTS.

REVISION: 2) REVISED NOTES SECTION AND CHANGED "M.J. FITTING" TO "M.J. GLAND" – 03/14/2012
REVISION: 1) REVISED NOTE 1 REGARDING POLYETHYLENE WRAPPING AND ADDED NOTE 3 REGARDING TESTING OF TAPPING SLEEVE – 03/14/2012

4" AND LARGER TAPPING SLEEVE AND VALVE ASSEMBLY

SYSTIMS\PROJECT\DWG\