PROJECT REFERENCE NO.	SHEET NO.
R-2514C	2A-1

ROADWAY DESIGN ENGINEER

NORTH CAROLINA PROFESSIONAL SEAL 033871 ENGINEER DANIEL W. GARDNER, JR.

3/2/2015

DocuSigned by: Daniel W. Gardner, Jr.

CF400F454D8480...

PAVEMENT DESIGN ENGINEER

NORTH CAROLINA PROFESSIONAL SEAL 031484 ENGINEER VLADIMIR G. MILOVICH

3/2/2015

DocuSigned by: Vladimir Milovich

A8CBEF405EA847E...

PAVEMENT SCHEDULE

(FINAL PAVEMENT DESIGN)

C1	PROP. APPROX. 3" ASPHALT CONCRETE SURFACE COURSE, TYPE S9.5B, AT AN AVERAGE RATE OF 168 LBS. PER SQ. YD. IN EACH OF TWO LAYERS	J1	PROP. 8" AGGREGATE BASE COURSE
C2	PROP. APPROX. 3" ASPHALT CONCRETE SURFACE COURSE, TYPE S9.5C, AT AN AVERAGE RATE OF 168 LBS. PER SQ. YD. IN EACH OF TWO LAYERS	J2	PROP. VAR. DEPTH AGGREGATE BASE COURSE
C3	PROP. VAR. DEPTH ASPHALT CONCRETE SURFACE COURSE, TYPE S9.5B, AT AN AVERAGE RATE OF 112 LBS. PER SQ. YD. PER 1" DEPTH TO BE PLACED IN LAYERS NOT LESS THAN 1.5" OR GREATER THAN 2" IN DEPTH.	L	3" CLASS IV AGGREGATE STABILIZATION
D1	PROP. APPROX. 4" ASPHALT CONCRETE INTERMEDIATE COURSE, TYPE I19.0C, AT AN AVERAGE RATE OF 456 LBS. PER SQ. YD.	P	PROP. PRIME COAT AT THE RATE OF .35 GAL. PER SQ. YD.
E1	PROP. APPROX. 4" ASPHALT CONCRETE BASE COURSE, TYPE B25.0B, AT AN AVERAGE RATE OF 456 LBS. PER SQ. YD.	R	PROP. 5" MONOLITHIC CONCRETE ISLAND (KEYED IN)
E2	PROP. APPROX. 5" ASPHALT CONCRETE BASE COURSE, TYPE B25.0B, AT AN AVERAGE RATE OF 570 LBS. PER SQ. YD.	T	EARTH MATERIAL
E3	PROP. APPROX. 5 1/2" ASPHALT CONCRETE BASE COURSE, TYPE B25.0B, AT AN AVERAGE RATE OF 627 LBS. PER SQ. YD.	U	EXISTING PAVEMENT
E4	PROP. VAR. DEPTH ASPHALT CONCRETE BASE COURSE, TYPE B25.0B, AT AN AVERAGE RATE OF 114 LBS. PER SQ. YD. PER 1" DEPTH TO BE PLACED IN LAYERS NOT LESS THAN 3" OR GREATER THAN 5.5" IN DEPTH.	W	VARIABLE DEPTH ASPHALT PAVEMENT (SEE WEDGING DETAIL)
E5	PROP. APPROX. 4" ASPHALT CONCRETE BASE COURSE, TYPE B25.0C, AT AN AVERAGE RATE OF 456 LBS. PER SQ. YD.		

NOTES: 1) PAVEMENT EDGE SLOPES ARE 1:1 UNLESS SHOWN OTHERWISE.
2) MILL EXISTING PAVEMENT AT END OF GRADE TIE-IN LOCATIONS.

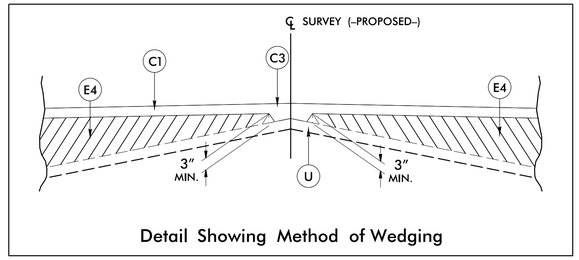

Detail Showing Method of Wedging

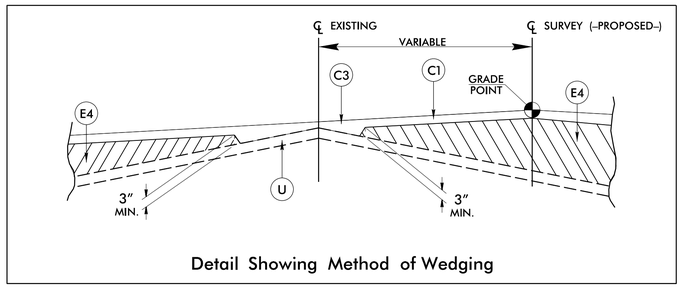

Detail Showing Method of Wedging

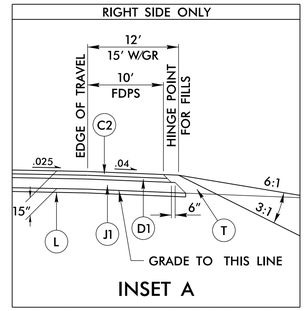

INSET A

USE INSET A WITH TYPICAL SECTION NO. 1:

–L– STA. 27+00.00+/– TO –L– STA. 101+45.00 (BEGIN BRIDGE)
–L– STA. 102+65.00 (END BRIDGE) TO –L– STA. 205+00.00+/–

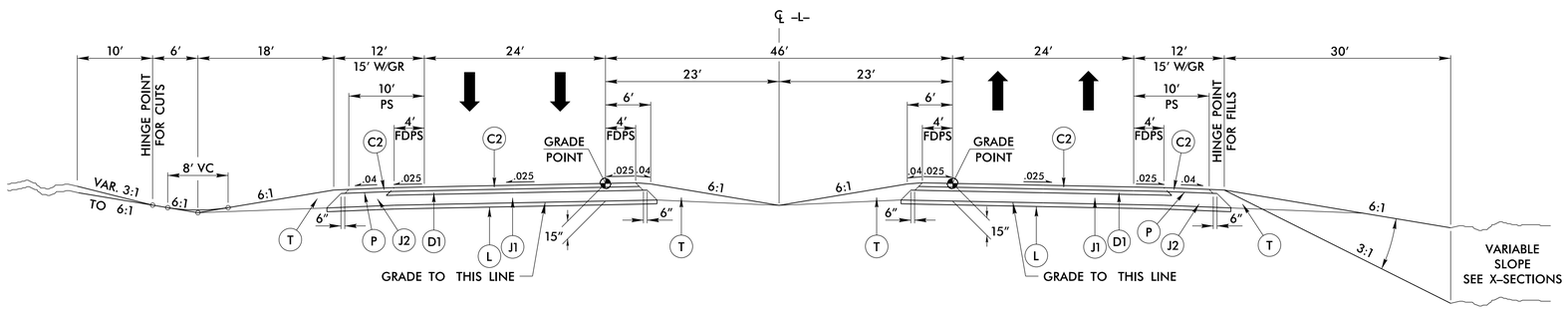

TYPICAL SECTION NO. 1

USE TYPICAL SECTION NO. 1 FOR:

–L– STA. 10+00.00 TO –L– STA. 101+45.00 (BEGIN BRIDGE)
–L– STA. 102+65.00 (END BRIDGE) TO –L– STA. 300+00.00

NOTE:

1) USE 3:1 FILL SLOPE IN WETLAND AREAS
–L– STA. 10+00.00 (LT) TO –L– STA. 19+50.00 (LT)
–L– STA. 10+00.00 (RT) TO –L– STA. 17+25.00 (RT)
–L– STA. 20+50.00 (RT) TO –L– STA. 101+45.00 (RT)
–L– STA. 23+90.00 (LT) TO –L– STA. 24+50.00 (LT)
–L– STA. 33+00.00 (LT) TO –L– STA. 37+50.00 (LT)
–L– STA. 62+00.00 (LT) TO –L– STA. 66+50.00 (LT)
–L– STA. 78+00.00 (LT) TO –L– STA. 83+00.00 (LT)
–L– STA. 96+00.00 (LT) TO –L– STA. 101+45.00 (LT)
–L– STA. 102+65.00 (RT) TO –L– STA. 106+00.00 (RT)
–L– STA. 106+00.00 (LT) TO –L– STA. 109+50.00 (LT)
–L– STA. 118+00.00 (RT) TO –L– STA. 124+50.00 (RT)
–L– STA. 128+00.00 (LT) TO –L– STA. 131+50.00 (LT)
–L– STA. 128+00.00 (RT) TO –L– STA. 151+50.00 (RT)
–L– STA. 143+50.00 (LT) TO –L– STA. 151+50.00 (LT)
–L– STA. 159+00.00 (RT) TO –L– STA. 164+50.00 (RT)
–L– STA. 171+50.00 (LT) TO –L– STA. 173+00.00 (LT)
–L– STA. 173+00.00 (RT) TO –L– STA. 173+50.00 (RT)
–L– STA. 180+00.00 (RT) TO –L– STA. 181+00.00 (RT)
–L– STA. 194+50.00 (RT) TO –L– STA. 195+00.00 (RT)
–L– STA. 256+00.00 (RT) TO –L– STA. 262+50.00 (RT)
–L– STA. 258+00.00 (LT) TO –L– STA. 260+50.00 (LT)
–L– STA. 269+00.00 (RT) TO –L– STA. 270+00.00 (RT)
–L– STA. 269+00.00 (LT) TO –L– STA. 270+00.00 (LT)

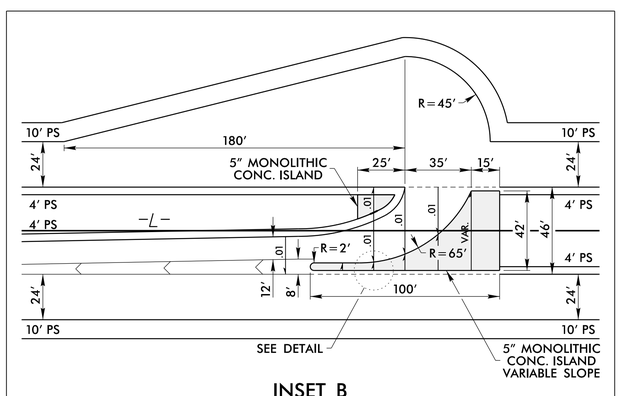

INSET B

USE INSET B WITH TYPICAL SECTION NO. 1:

–L– STA. 16+75.00 (NO U-TURN BULB, –LBUS– INTERSECTION)
–L– STA. 25+00.00
–L– STA. 38+30.00
–L– STA. 46+25.00 (NO U-TURN BULB, LANDFILL ENTRANCE)
–L– STA. 71+60.00
–L– STA. 86+90.00
–L– STA. 165+00.00
–L– STA. 181+40.00
–L– STA. 226+10.00
–L– STA. 242+40.00

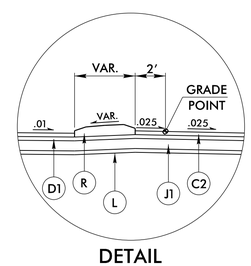

DETAIL

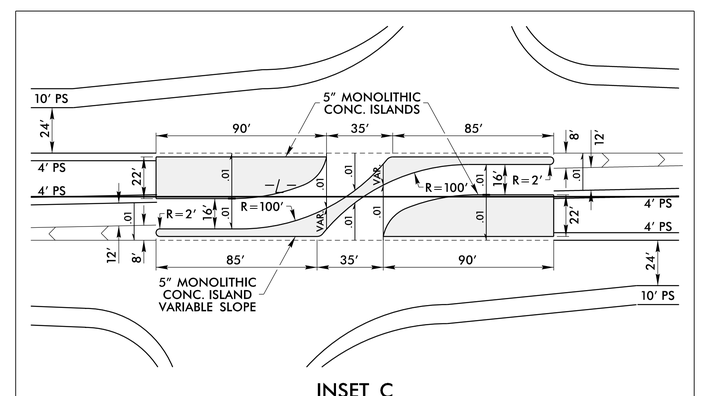

INSET C

USE INSET C WITH TYPICAL SECTION NO. 1:

–L– STA. 234+27.30 (–Y1– INTERSECTION)

6/2/99

3/19/2015
R:\Roadway\Proj\R2514C_Rdy_typ.dgn