SCOTLAND COUNTY

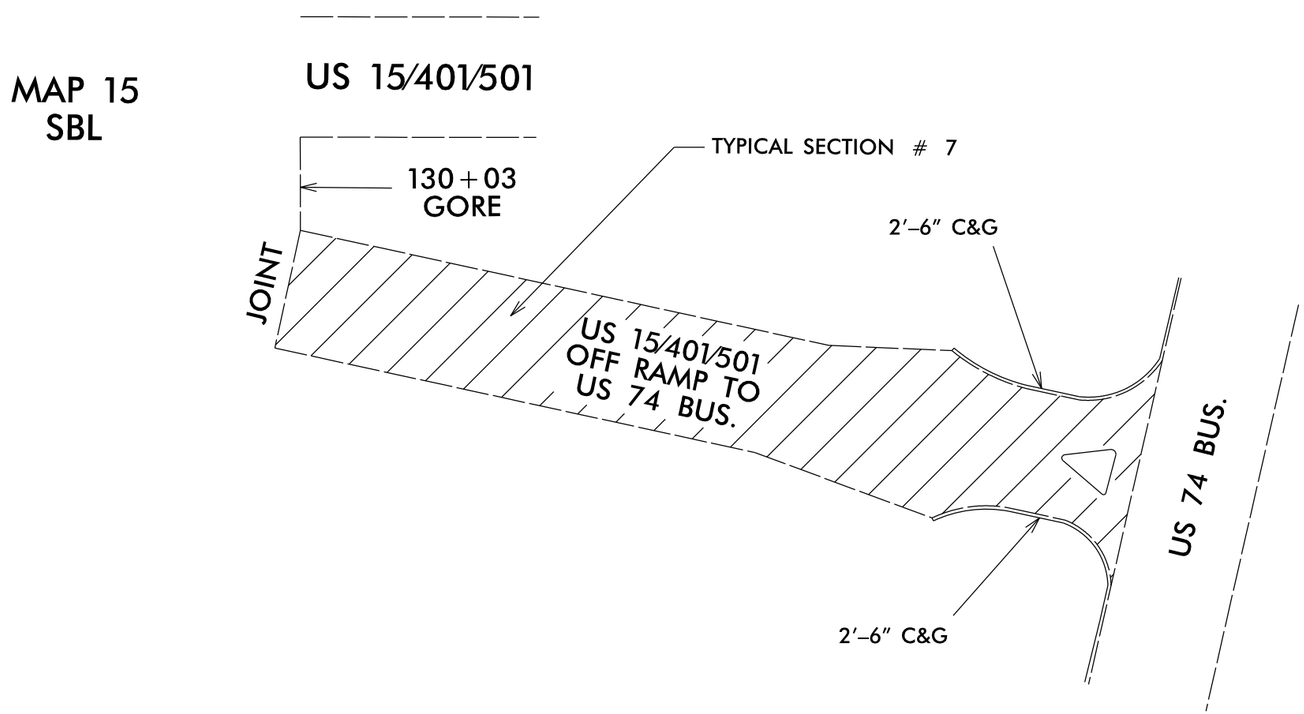

NOTE: MILL & FILL

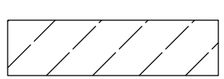

5/28/99
$$$