PROJECT REFERENCE NO.	SHEET NO.
8CR.10471.27, 8CR.20471.27 8CR.10831.27, 8CR.20831.27	20

SCOTLAND COUNTY

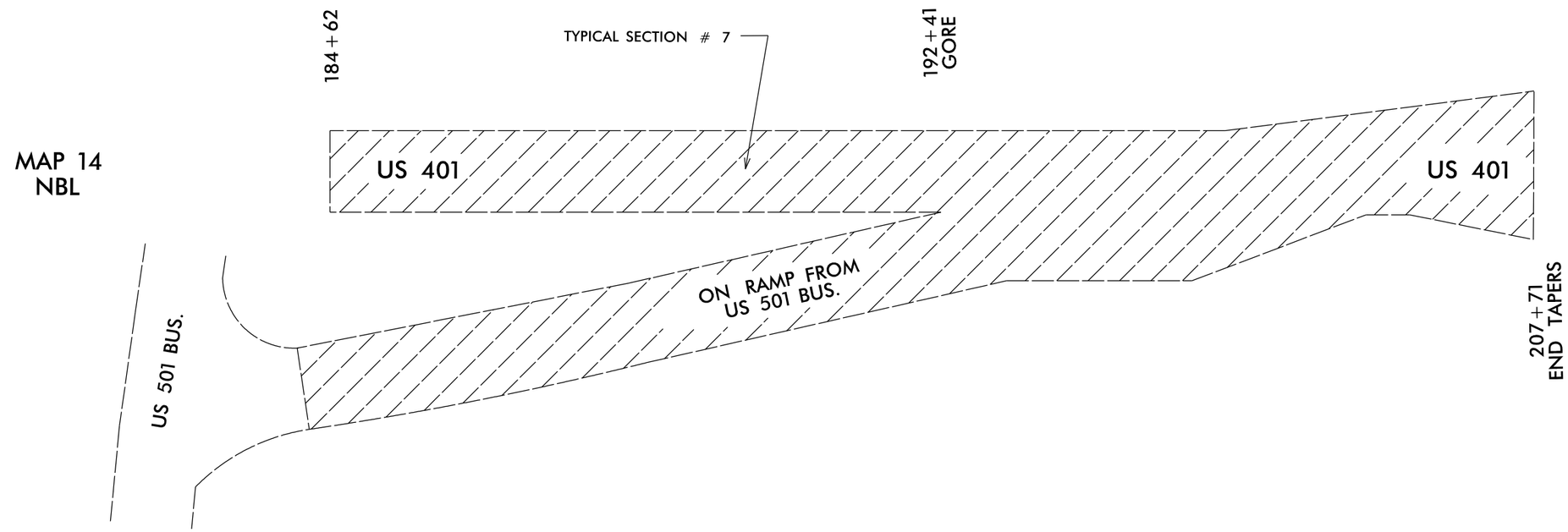

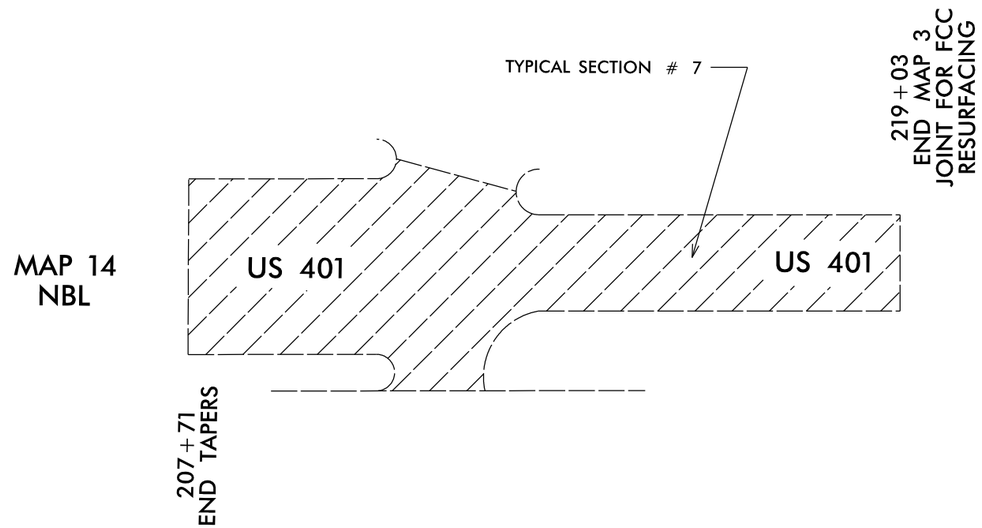

NOTE: MILL & FILL

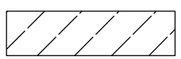

5/28/99

$$$$$$SYSTIME$$$$$$
$$$$$$