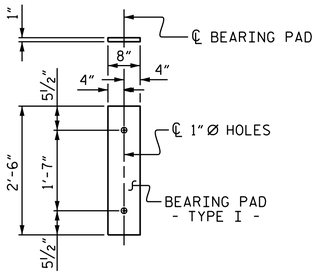


FIXED END
( TYPE I - 22 REQ'D )

## ELASTOMERIC BEARING DETAILS

ELASTOMER IN ALL BEARINGS SHALL BE 50 DUROMETER HARDNESS.

| BILL OF MATERIAL FOR VERTICAL CONCRETE BARRIER RAIL | | | | | | |
|---|---|---|---|---|---|---|
| BAR | BARS PER PAIR OF EXTERIOR UNITS | TOTAL NO. | SIZE | TYPE | LENGTH | WEIGHT |
| | 55' UNIT | | | | | |
| | | | | | | |
| ✳B14 | 40 | 40 | #5 | STR | 27'-1" | 1130 |
| | | | | | | |
| ✳ S4 | 128 | 128 | #5 | 2 | 7'-2" | 957 |
| | | | | | | |
| ✳ EPOXY COATED REINFORCING STEEL | | | | LBS. | | 2087 |
| CLASS AA CONCRETE | | | | CU.YDS. | | 14.1 |
| TOTAL VERTICAL CONCRETE BARRIER RAIL | | | | LN. FT. | | 110.25 |

## BAR TYPES

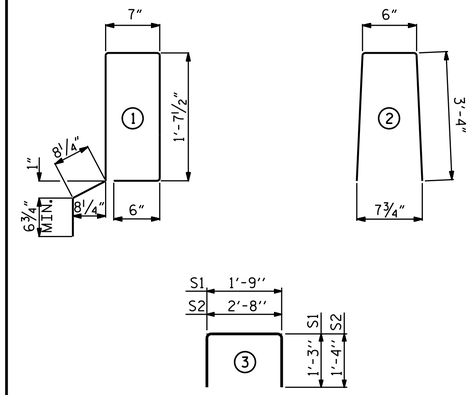


ALL BAR DIMENSIONS ARE OUT TO OUT

## NOTES

ALL PRESTRESSING STRANDS SHALL BE 7-WIRE LOW RELAXATION GRADE 270 STRANDS AND SHALL CONFORM TO AASHTO M203 EXCEPT FOR SAMPLING REQUIREMENTS WHICH SHALL BE IN ACCORDANCE WITH THE STANDARD SPECIFICATIONS.

ALL REINFORCING STEEL CAST WITH THE CORED SLAB SECTIONS SHALL BE GRADE 60 AND SHALL BE INCLUDED IN THE UNIT PRICE BID FOR PRESTRESSED CONCRETE CORED SLABS.

RECESSES FOR TRANSVERSE STRANDS SHALL BE GROUTED AFTER THE TENSIONING OF THE STRANDS.

THE 2½"Ø DOWEL HOLES AT FIXED ENDS OF SLAB SECTIONS SHALL BE FILLED WITH NON-SHRINK GROUT.

THE BACKER RODS SHALL CONFORM TO THE REQUIREMENTS OF TYPE M BOND BREAKER. SEE SECTION 1028 OF THE STANDARD SPECIFICATIONS.

WHEN CORED SLABS ARE CAST, AN INTERNAL HOLD-DOWN SYSTEM SHALL BE EMPLOYED TO PREVENT VOIDS FROM RISING OR MOVING SIDEWAYS. AT LEAST SIX WEEKS PRIOR TO CASTING CORED SLABS, THE CONTRACTOR SHALL SUBMIT TO THE ENGINEER FOR REVIEW AND COMMENT, DETAILED DRAWINGS OF THE PROPOSED HOLD-DOWN SYSTEM. IN ADDITION TO STRUCTURAL DETAILS, LOCATION AND SPACING OF THE HOLD-DOWNS SHALL BE INDICATED.

ALL REINFORCING STEEL IN THE VERTICAL CONCRETE BARRIER RAIL SHALL BE EPOXY COATED.

PRESTRESSING STRANDS SHALL BE CUT FLUSH WITH THE CORED SLAB UNIT ENDS.

APPLY EPOXY PROTECTIVE COATING TO CORED SLAB UNIT ENDS.

GROOVED CONTRACTION JOINTS, ½" IN DEPTH, SHALL BE TOOLED IN ALL EXPOSED FACES OF THE BARRIER RAIL AND IN ACCORDANCE WITH ARTICLE 825-10(B) OF THE STANDARD SPECIFICATIONS. A CONTRACTION JOINT SHALL BE LOCATED AT EACH THIRD POINT BETWEEN BARRIER RAIL EXPANSION JOINTS. ONLY ONE CONTRACTION JOINT IS REQUIRED AT MIDPOINT OF BARRIER RAIL SEGMENTS LESS THAN 20 FEET IN LENGTH AND NO CONTRACTION JOINTS ARE REQUIRED FOR THOSE SEGMENTS LESS THAN 10 FEET IN LENGTH.

FLAME CUTTING OF THE TRANSVERSE POST-TENSIONING STRAND IS NOT ALLOWED.

THE TRANSFER OF LOAD FROM THE ANCHORAGES TO THE CORED SLAB UNIT SHALL BE DONE WHEN THE CONCRETE HAS REACHED A COMPRESSIVE STRENGTH OF NOT LESS THAN THE REQUIRED STRENGTH SHOWN IN THE "CONCRETE RELEASE STRENGTH" TABLE.

FOR GROUT FOR STRUCTURES, SEE SPECIAL PROVISIONS.

THE PERMITTED THREADED INSERTS ARE DETAILED AS AN OPTION FOR THE CONTRACTOR TO ATTACH FALSEWORK AND FORMWORK DURING CONSTRUCTION.

THE PERMITTED THREADED INSERTS IN THE EXTERIOR UNITS SHALL BE SIZED BY THE CONTRACTOR, SPACED AT 4'-0" CENTERS AND GALVANIZED IN ACCORDANCE WITH SECTION 1076 OF THE STANDARD SPECIFICATIONS. STAINLESS STEEL THREADED INSERTS MAY BE USED AS AN ALTERNATE.

THE PERMITTED THREADED INSERTS SHALL BE GROUTED BY THE CONTRACTOR IMMEDIATELY FOLLOWING REMOVAL OF THE FALSEWORK.

THE COST OF THE PERMITTED THREADED INSERTS SHALL BE INCLUDED IN THE PRICE BID FOR THE PRECAST UNITS.

| DEAD LOAD DEFLECTION AND CAMBER | |
|---|---|
| | 3'-0" x 1'-9" |
| 55' CORED SLAB UNIT | 0.6"Ø L.R. STRAND |
| CAMBER ( SLAB ALONE IN PLACE ) | 1½" ↑ |
| DEFLECTION DUE TO SUPERIMPOSED DEAD LOAD✳✳ | ⅜" ↓ |
| FINAL CAMBER | 1⅛" ↑ |

✳✳ INCLUDES FUTURE WEARING SURFACE

| GUTTERLINE ASPHALT THICKNESS & RAIL HEIGHT | | |
|---|---|---|
| 30'-10" CLEAR ROADWAY | ASPHALT OVERLAY THICKNESS | RAIL HEIGHT |
| | @ MID-SPAN | @ MID-SPAN |
| | NORMAL CROWN SECTION | |
| 55' UNITS | 1⅝" | 3'-7⅝" |

| CONCRETE RELEASE STRENGTH | |
|---|---|
| | |
| UNIT | PSI |
| 55' UNITS | 4900 |

| BILL OF MATERIAL FOR ONE 55' CORED SLAB UNIT | | | | | | | |
|---|---|---|---|---|---|---|---|
| | | | | EXTERIOR UNIT | | INTERIOR UNIT | |
| BAR | NUMBER | SIZE | TYPE | LENGTH | WEIGHT | LENGTH | WEIGHT |
| B7 | 4 | #4 | STR | 28'-3" | 75 | 28'-3" | 75 |
| | | | | | | | |
| S1 | 8 | #5 | 3 | 4'-3" | 35 | 4'-3" | 35 |
| S2 | 114 | #4 | 3 | 5'-4" | 406 | 5'-4" | 406 |
| ✳ S3 | 64 | #5 | 1 | 5'-7" | 373 | | |
| | | | | | | | |
| | | | | | | | |
| REINFORCING STEEL | | | LBS. | | 516 | | 516 |
| ✳ EPOXY COATED REINFORCING STEEL | | | LBS. | | 373 | | |
| 6500 P.S.I. CONCRETE | | | CU. YDS. | | 7.8 | | 7.8 |
| | | | | | | | |
| 0.6"Ø L.R. STRANDS | | | No. | | 19 | | 19 |

| CORED SLABS REQUIRED | | | |
|---|---|---|---|
| | NUMBER | LENGTH | TOTAL LENGTH |
| 55' UNIT | | | |
| EXTERIOR C.S. | 2 | 55'-0" | 110'-0" |
| INTERIOR C.S. | 9 | 55'-0" | 495'-0" |
| TOTAL | 11 | 55'-0" | 605'-0" |

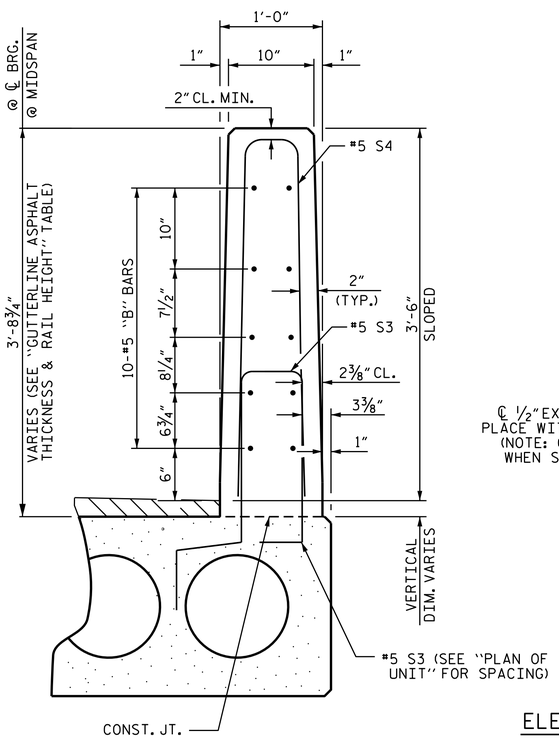


VERTICAL CONCRETE BARRIER RAIL SECTION

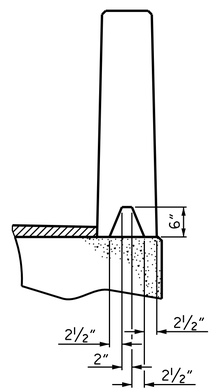


SECTION S-S
AT DAM IN OPEN JOINT
(THIS IS TO BE USED ONLY WHEN SLIP FORM IS USED)

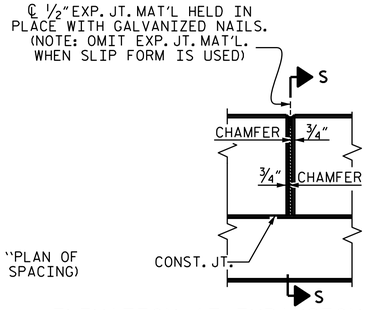


ELEVATION AT EXPANSION JOINTS

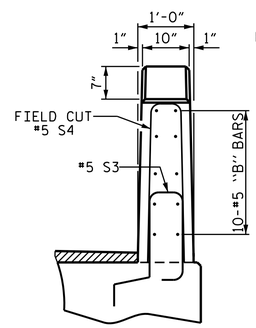


END VIEW

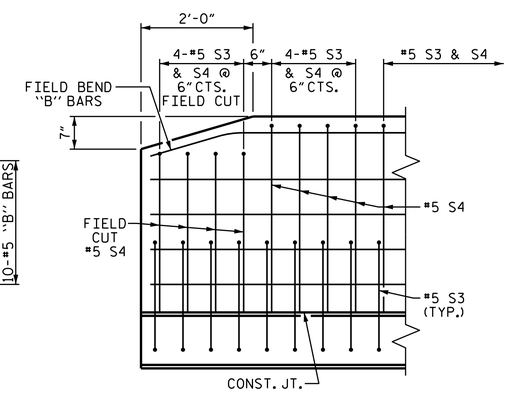


SIDE VIEW

END OF RAIL DETAILS

| GRADE 270 STRANDS | |
|---|---|
| | 0.6"Ø L.R. |
| AREA ( SQUARE INCHES ) | 0.217 |
| ULTIMATE STRENGTH ( LBS. PER STRAND ) | 58,600 |
| APPLIED PRESTRESS ( LBS. PER STRAND ) | 43,950 |

PROJECT NO. B-4681
WILSON COUNTY
STATION: 16+12.50 -L-

SHEET 3 OF 4

STATE OF NORTH CAROLINA
DEPARTMENT OF TRANSPORTATION
RALEIGH

STANDARD
3'-0" X 1'-9"
PRESTRESSED CONCRETE
CORED SLAB UNIT
90° SKEW

NORTH CAROLINA PROFESSIONAL SEAL 21271 ENGINEER GREGORY W. DICKEY

DocuSigned by: Greg Dickey 2/19/2015
884E4B8CE5B4B6...

| ASSEMBLED BY : A. K. PATEL | DATE : 06/2014 |
|---|---|
| CHECKED BY : P. N. HOLDER | DATE : 06/2014 |
| DRAWN BY : DGE 5/09 | REV. 12/11 MAA/AAC |
| CHECKED BY : BCH 6/09 | REV. 8/14 MAA/TMG |

| REVISIONS | | | | | | SHEET NO. |
|---|---|---|---|---|---|---|
| NO. | BY: | DATE: | NO. | BY: | DATE: | S-7 |
| 1 | | | 3 | | | TOTAL SHEETS |
| 2 | | | 4 | | | 15 |

18-FEB-2015 13:36
Y:\Structures\Plans\FinalPlans\B-4681_SD_CS.dgn
emurray

STD. NO. 21"PCS3_33_90S