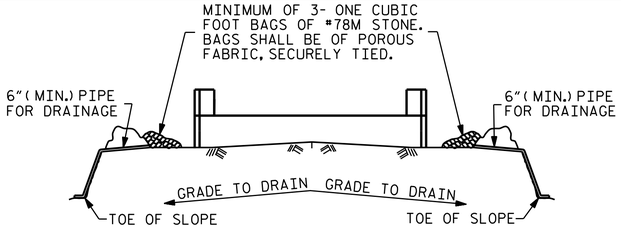


BAGGED STONE AND PIPE SHALL BE PLACED IMMEDIATELY AFTER COMPLETION OF END BENT EXCAVATION. PIPE MAY BE EITHER CONCRETE, CORRUGATED STEEL, CORRUGATED ALUMINUM ALLOY, OR CORRUGATED PLASTIC. PERFORATED PIPE WILL NOT BE ALLOWED.

BAGGED STONE SHALL REMAIN IN PLACE UNTIL THE ENGINEER DIRECTS THAT IT BE REMOVED. THE CONTRACTOR SHALL REMOVE AND DISPOSE OF SILT ACCUMULATIONS AT BAGGED STONE WHEN SO DIRECTED BY THE ENGINEER. BAGS SHALL BE REMOVED AND REPLACED WHENEVER THE ENGINEER DETERMINES THAT THEY HAVE DETERIORATED AND LOST THEIR EFFECTIVENESS.

NO SEPARATE PAYMENT WILL BE MADE FOR THIS WORK AND THE ENTIRE COST OF THIS WORK SHALL BE INCLUDED IN THE UNIT CONTRACT PRICE BID FOR THE SEVERAL PAY ITEMS.

## TEMPORARY DRAINAGE AT END BENT

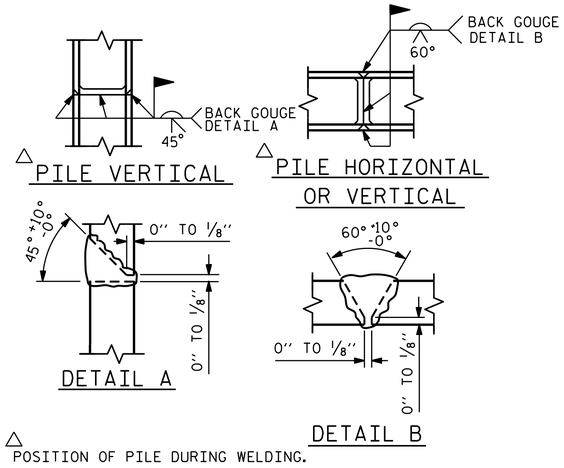


△ POSITION OF PILE DURING WELDING.

## PILE SPLICE DETAILS

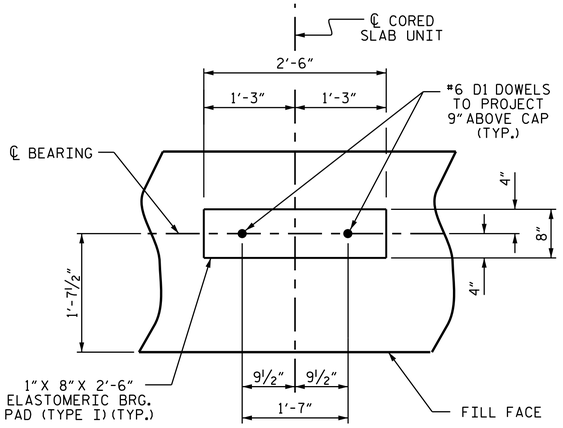


## DETAIL "A"

(END BENT No. 1 SHOWN, END BENT No. 2 SIMILAR BY ROTATION)

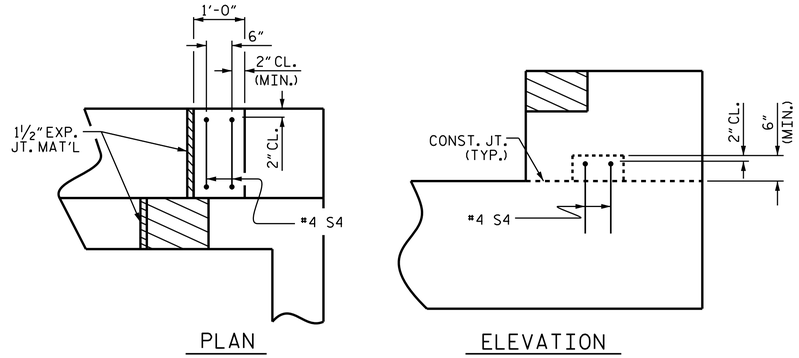


## LATERAL GUIDE DETAILS

(RIGHT LATERAL GUIDE SHOWN, LEFT END SIMILAR)

## BAR TYPES

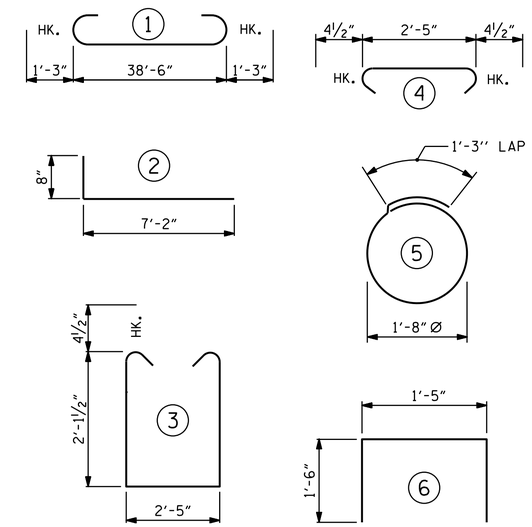


ALL BAR DIMENSIONS ARE OUT TO OUT.

| END BENT No. 1 | END BENT No. 2 |
|---|---|
| ▲ 12" PRESTRESSED CONCRETE PILES | ▲ 12" PRESTRESSED CONCRETE PILES |
| NO: 7 LIN. FT.= 385 | NO: 7 LIN. FT.= 315 |
| PILE REDRIVES 4 EA. | PILE REDRIVES 4 EA. |

▲ FOR OPTIONAL STEEL PILES, SEE GENERAL DRAWING SHEET 2 OF 3

## BILL OF MATERIAL FOR ONE END BENT

| BAR | NO. | SIZE | TYPE | LENGTH | WEIGHT |
|---|---|---|---|---|---|
| B1 | 8 | #9 | 1 | 41'-0" | 1115 |
| B2 | 16 | #4 | STR | 20'-7" | 220 |
| B3 | 10 | #4 | STR | 2'-5" | 16 |
| D1 | 22 | #6 | STR | 1'-6" | 50 |
| H1 | 24 | #4 | 2 | 7'-10" | 126 |
| K1 | 12 | #4 | STR | 2'-11" | 23 |
| S1 | 50 | #4 | 3 | 7'-5" | 248 |
| S2 | 50 | #4 | 4 | 3'-2" | 106 |
| S3 | 14 | #4 | 5 | 6'-6" | 61 |
| S4 | 4 | #4 | 6 | 4'-5" | 12 |
| V1 | 48 | #4 | STR | 4'-8" | 150 |

REINFORCING STEEL (FOR ONE END BENT) 2127 LBS.

CLASS A CONCRETE BREAKDOWN (FOR ONE END BENT)

| | | |
|---|---|---|
| POUR #1 | CAP & LOWER PART OF WINGS | ✱ 10.9 C.Y. |
| POUR #2 | UPPER PART OF WINGS | 1.8 C.Y. |
| POUR #3 | LATERAL GUIDES | 0.1 C.Y. |
| TOTAL CLASS A CONCRETE | | 12.8 C.Y. |

✱ THE CONCRETE DISPLACED BY THE 12" PRESTRESSED CONCRETE PILE HAS BEEN DEDUCTED FROM THE QUANTITY OF CLASS 'A' CONCRETE FOR THE END BENT CAP.

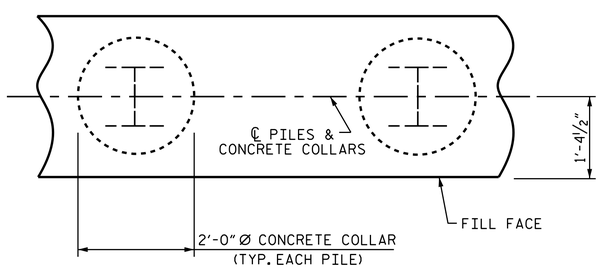


PLAN

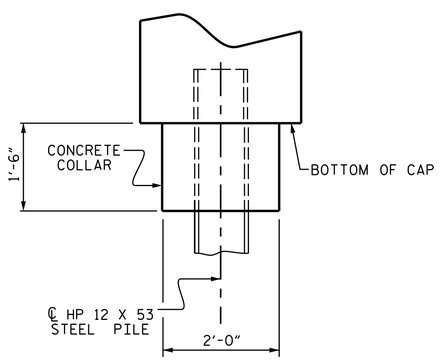


ELEVATION

## CORROSION PROTECTION FOR STEEL PILES DETAIL

(END BENT No. 1 SHOWN, END BENT No. 2 SIMILAR BY ROTATION)

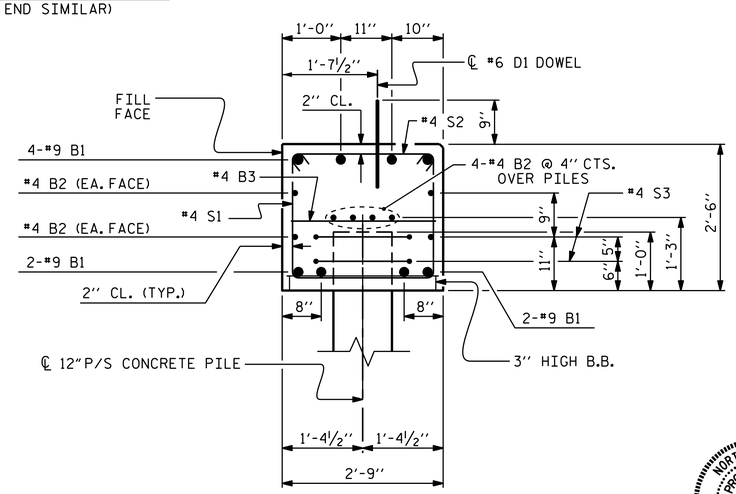


## SECTION A-A

NORTH CAROLINA PROFESSIONAL SEAL 21271 ENGINEER GREGORY W. DICKEY

DocuSigned by: Greg Dickey 2/19/2015

PROJECT NO. B-4681

WILSON COUNTY

STATION: 16+12.50 -L-

SHEET 4 OF 5

STATE OF NORTH CAROLINA
DEPARTMENT OF TRANSPORTATION
RALEIGH

SUBSTRUCTURE

END BENT No. 1 & 2 DETAILS

| REVISIONS | | | | | | SHEET NO. |
|---|---|---|---|---|---|---|
| NO. | BY: | DATE: | NO. | BY: | DATE: | S-12 |
| 1 | | | 3 | | | TOTAL SHEETS |
| 2 | | | 4 | | | 15 |

| | | | |
|---|---|---|---|
| ASSEMBLED BY : | A. K. PATEL | DATE : | 06/2014 |
| CHECKED BY : | P. N. HOLDER | DATE : | 06/2014 |
| DRAWN BY : | DGE | 02/10 | |
| CHECKED BY : | MKT | 02/10 | |

18-FEB-2015 13:36
Y:\Structures\Plans\FinalPlans\B-4681_SD_CS.dgn
emurray

STD. NO. EB_33_90S