NOTES :

FOR BERM WIDTH DIMENSIONS, SEE GENERAL DRAWING.

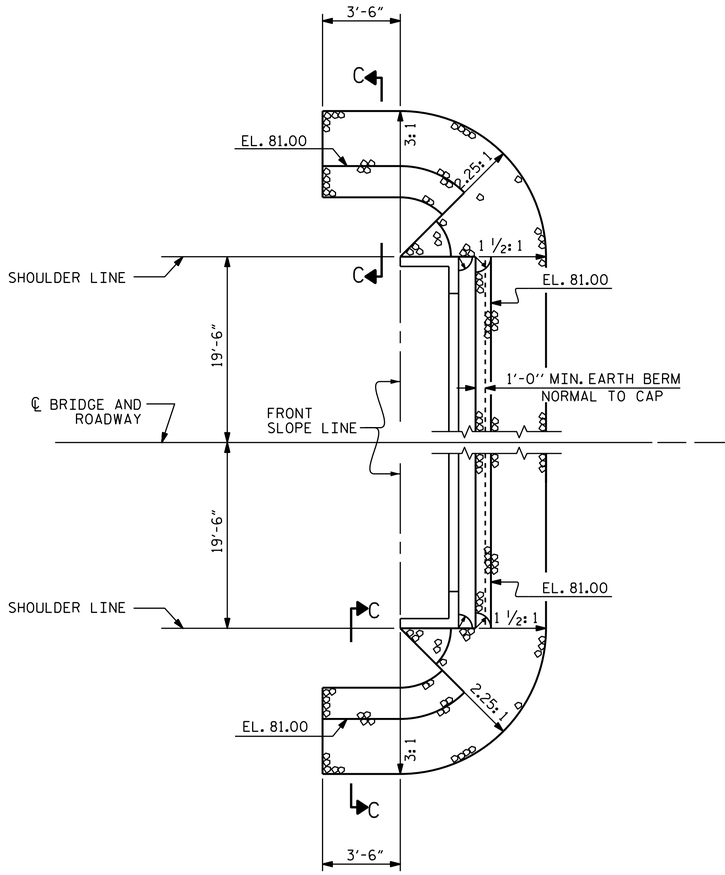


END BENT 1

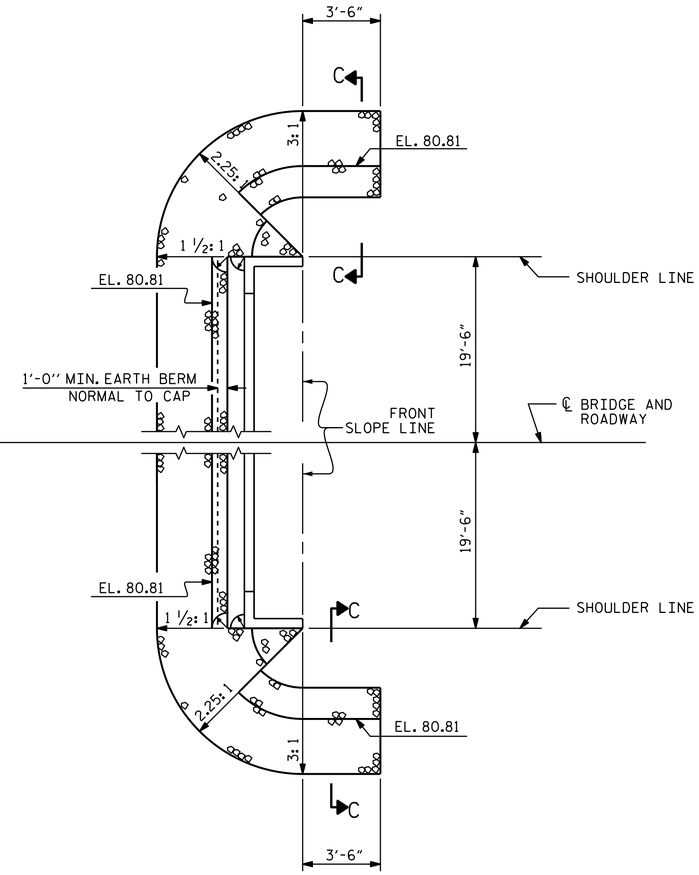


END BENT 2

BERM RIP RAPPED

| ESTIMATED QUANTITIES | | |
|---|---|---|
| BRIDGE @ STA. 16+12.50 -L- | RIP RAP CLASS II (2'-0" THICK) | GEOTEXTILE FOR DRAINAGE |
| | TONS | SQUARE YARDS |
| END BENT 1 | 67 | 74 |
| END BENT 2 | 63 | 70 |

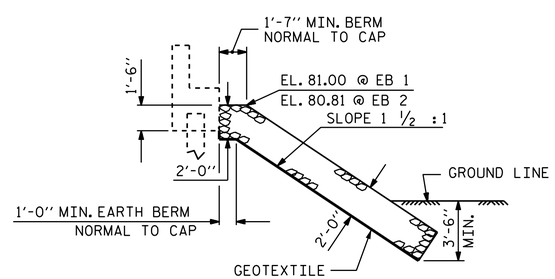


℄ SECTION

BERM RIP RAPPED

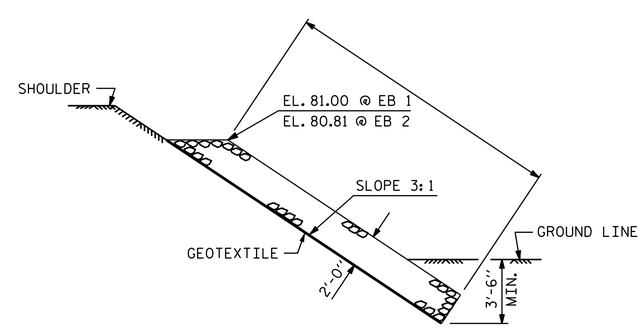


SECTION C-C

PROJECT NO. B-4681

WILSON COUNTY

STATION: 16+12.50 -L-

SHEET 1 OF 1

STATE OF NORTH CAROLINA
DEPARTMENT OF TRANSPORTATION
RALEIGH

STANDARD

RIP RAP DETAILS

NORTH CAROLINA PROFESSIONAL SEAL 21271 ENGINEER GREGORY W. DICKEY

DocuSigned by: Greg Dickey 2/19/2015
884E46BBCE5B4B6...

| REVISIONS | | | | | | | | SHEET NO. |
|---|---|---|---|---|---|---|---|---|
| NO. | BY: | DATE: | NO. | BY: | DATE: | | | S-14 |
| 1 | | | 3 | | | | | TOTAL SHEETS |
| 2 | | | 4 | | | | | 15 |

| | | | |
|---|---|---|---|
| ASSEMBLED BY : A. K. PATEL | | DATE : 06/2014 | |
| CHECKED BY : P. N. HOLDER | | DATE : 06/2014 | |
| DRAWN BY : REK 1/84 | REV. 5/1/06R | TLA/GM | |
| CHECKED BY : RDU 1/84 | REV. 10/1/11 | MAA/GM | |
| | REV. 12/21/11 | MAA/GM | |

18-FEB-2015 13:36
Y:\Structures\Plans\FinalPlans\B-4681_SD_CS.dgn
emurray

STD. NO. RR1 (Sht 2)