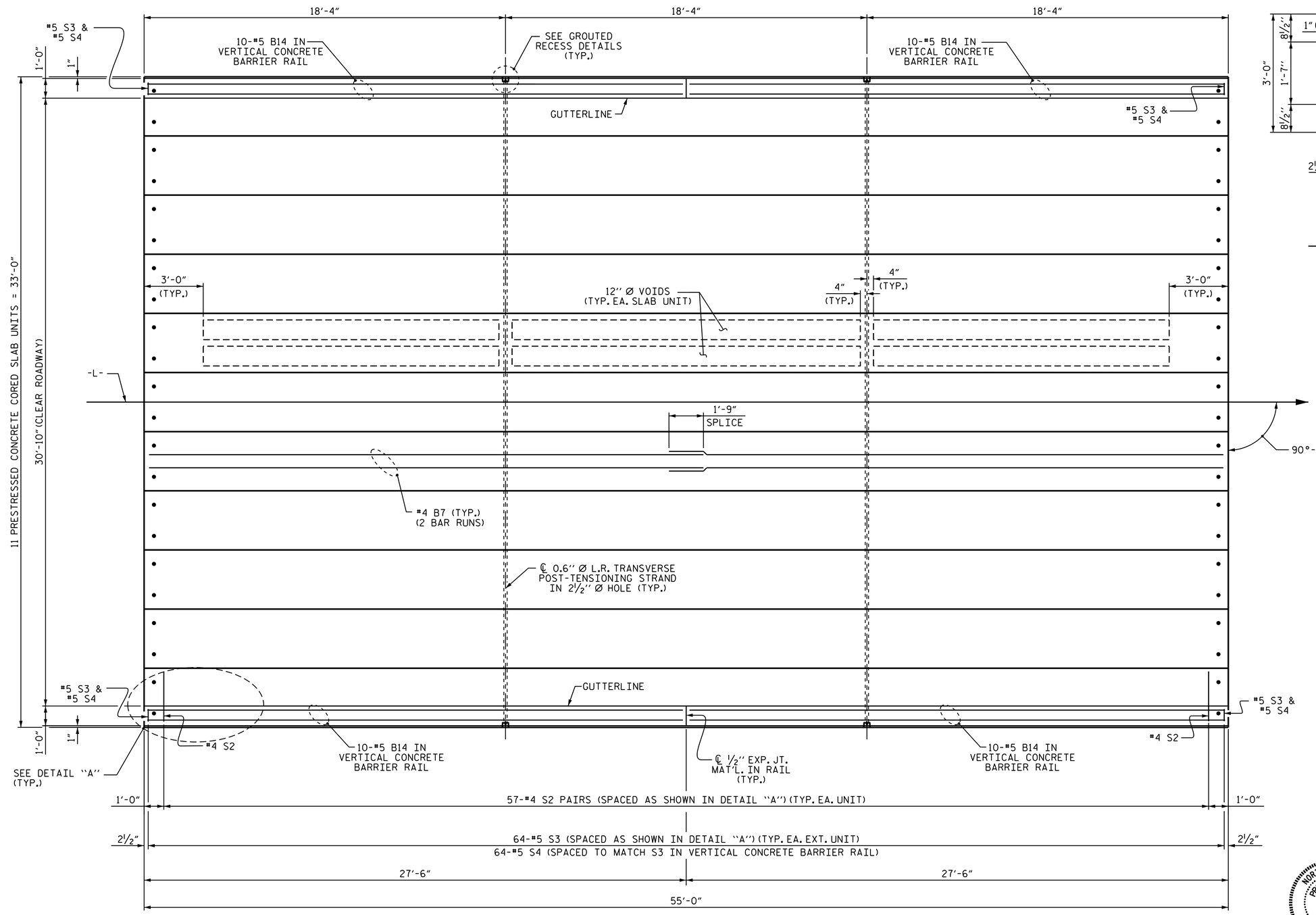


PLAN OF UNIT

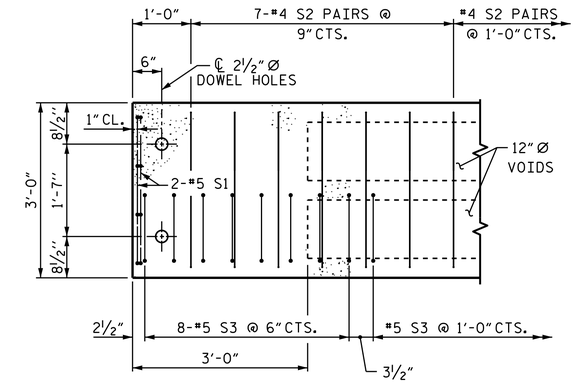


DETAIL "A"

(TYPICAL EACH END OF UNIT)
NOTE: EXTERIOR UNIT SHOWN - INTERIOR UNIT SIMILAR EXCEPT OMIT #5 S3 BARS.

PROJECT NO. B-4681
WILSON COUNTY
STATION: 16+12.50 -L-

SHEET 2 OF 4

STATE OF NORTH CAROLINA
DEPARTMENT OF TRANSPORTATION
RALEIGH

# PLAN OF 55' UNIT
# 30'-10" CLEAR ROADWAY
# 90° SKEW

NORTH CAROLINA PROFESSIONAL SEAL 21271 ENGINEER GREGORY W. DICKEY

DocuSigned by: Greg Dickey 2/19/2015
84E46BBCE5B4B6...

| | | | |
|---|---|---|---|
| ASSEMBLED BY : A. K. PATEL | | DATE : 06/2014 | |
| CHECKED BY : P. N. HOLDER | | DATE : 06/2014 | |
| DRAWN BY : DGE | 3/09 | REV. 12/5/11 | MAA/AAC |
| CHECKED BY : BCH | 3/09 | REV. 8/14 | MAA/TMG |

| REVISIONS | | | | | | | | SHEET NO. |
|---|---|---|---|---|---|---|---|---|
| NO. | BY: | DATE: | NO. | BY: | DATE: | | | S-6 |
| 1 | | | 3 | | | | | TOTAL SHEETS |
| 2 | | | 4 | | | | | 15 |

18-FEB-2015 13:36
Y:\Structures\Plans\FinalPlans\B-4681_SD_CS.dgn
emurray

STD. NO. 21" PCS_33_90S_55L