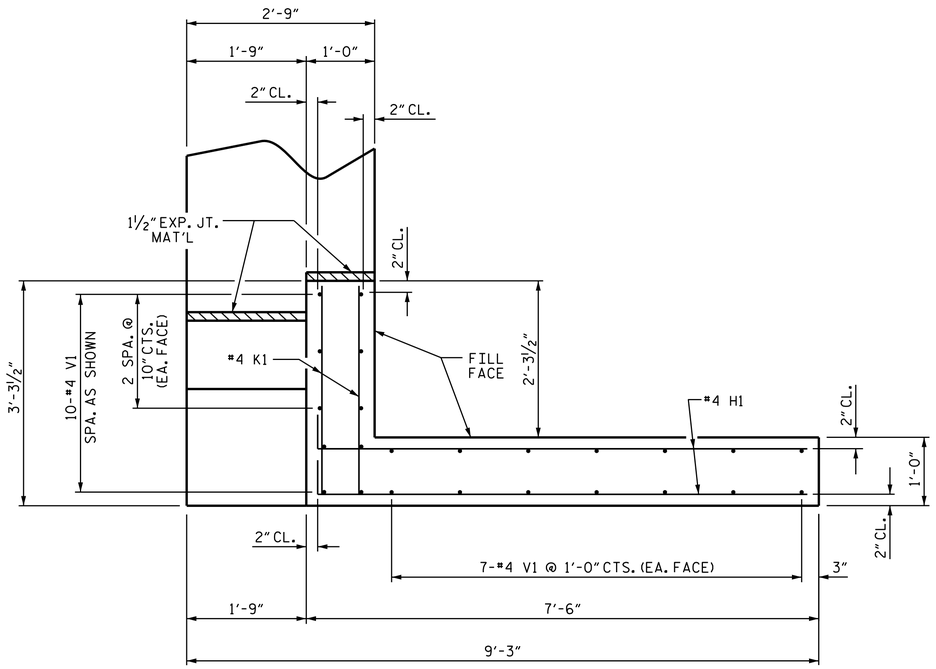


PLAN OF WING (W1)

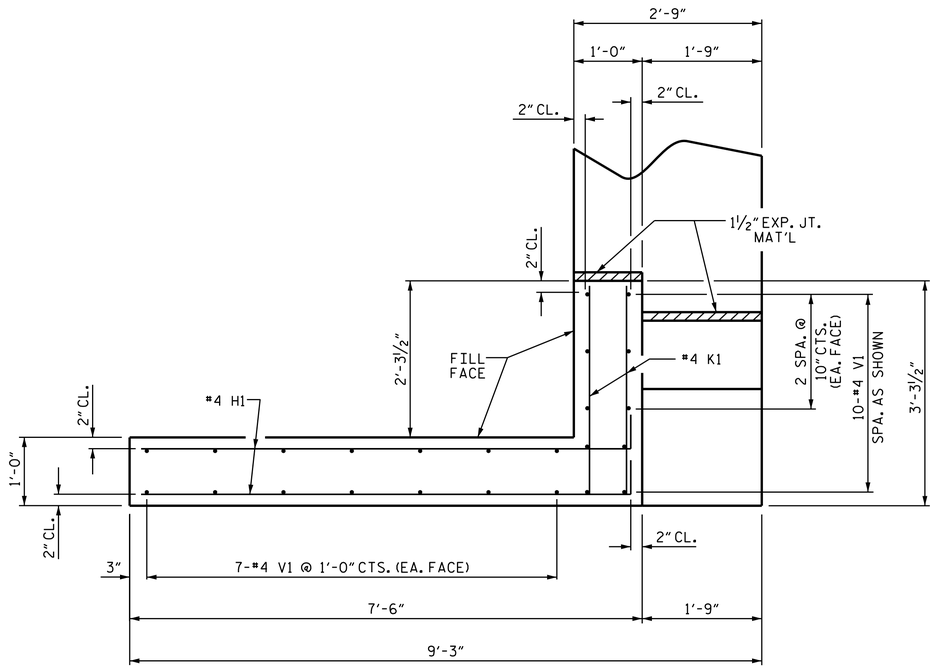


PLAN OF WING (W2)

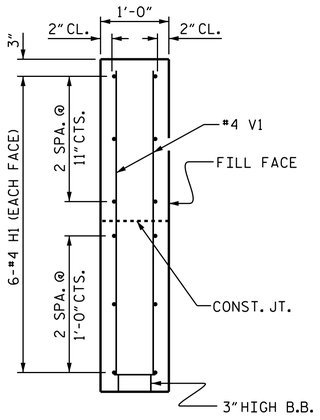


SECTION X-X

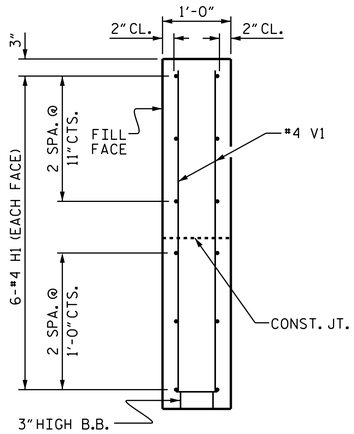


SECTION Y-Y

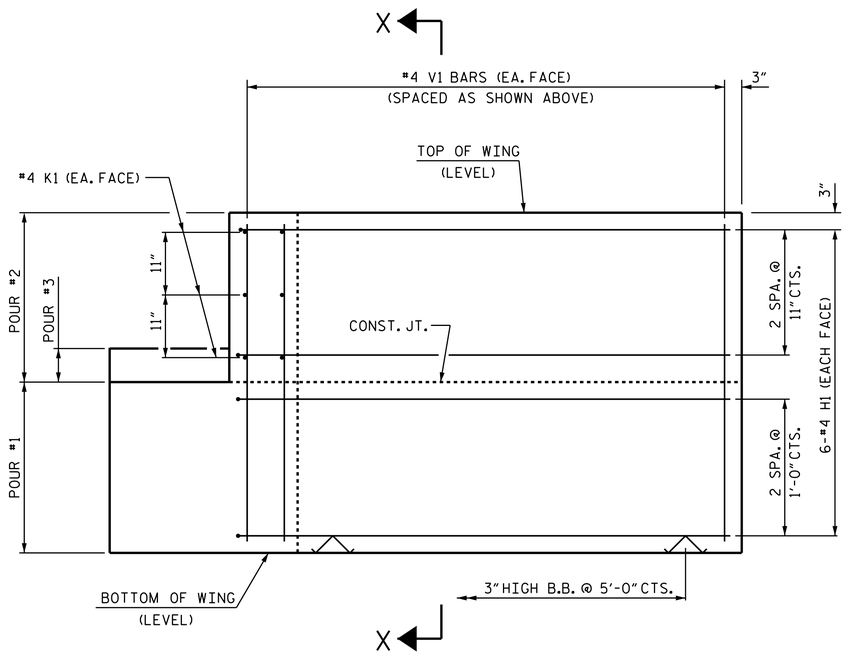


ELEVATION OF WING (W1)

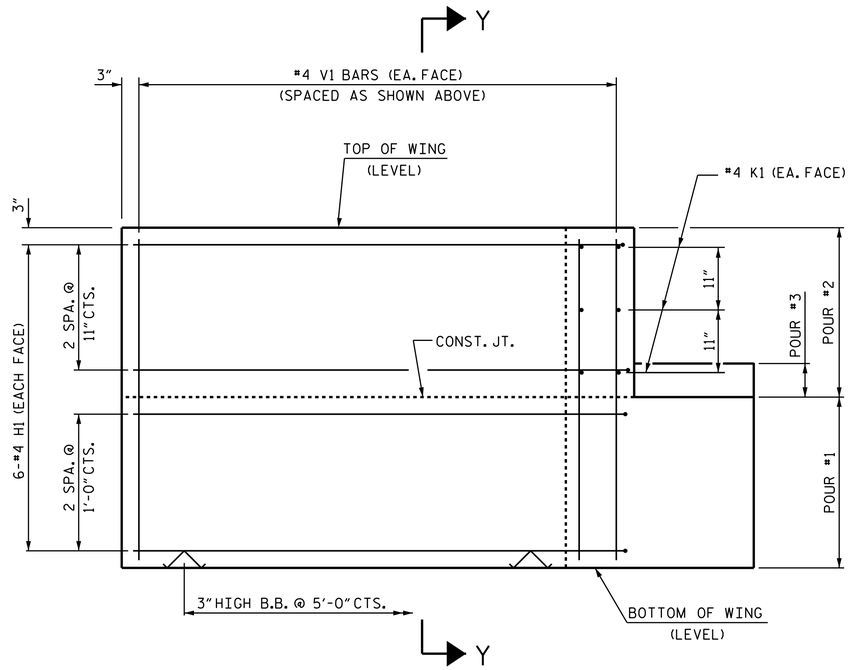


ELEVATION OF WING (W2)

WING DETAILS

PROJECT NO. B-4681

WILSON COUNTY

STATION: 16+12.50 -L-

SHEET 3 OF 5

STATE OF NORTH CAROLINA
DEPARTMENT OF TRANSPORTATION
RALEIGH

SUBSTRUCTURE

END BENT
WING DETAILS

NORTH CAROLINA PROFESSIONAL SEAL 21271 ENGINEER GREGORY W. DICKEY

DocuSigned by: Greg Dickey 2/19/2015
884E46B8CE5B4B6...

| REVISIONS | | | | | | SHEET NO. |
|---|---|---|---|---|---|---|
| NO. | BY: | DATE: | NO. | BY: | DATE: | S-11 |
| 1 | | | 3 | | | TOTAL SHEETS |
| 2 | | | 4 | | | 15 |

| | | | |
|---|---|---|---|
| ASSEMBLED BY : | A. K. PATEL | DATE : | 06/2014 |
| CHECKED BY : | P. N. HOLDER | DATE : | 06/2014 |
| DRAWN BY : | DGE | 02/10 | |
| CHECKED BY : | MKT | 02/10 | |

18-FEB-2015 13:36
Y:\Structures\Plans\FinalPlans\B-4681_SD_CS.dgn
emurray

STD. NO. EB_33_90S