PROJECT REFERENCE NO.	SHEET NO.
5CRJ0931J5, 5CR.20931J5	4

PAVEMENT SCHEDULE

C1	1½″ ASPHALT CONCRETE SURFACE COURSE, TYPE S9.5B, AT AN AVERAGE RATE OF 168 LBS. PER SQ. YD.
C2	1¼″ ASPHALT CONCRETE SURFACE COURSE, TYPE SF9.5A, AT AN AVERAGE RATE OF 137.5 LBS. PER SQ. YD.
E	5.5″ ASPHALT CONCRETE BASE COURSE, TYPE B25.0B, AT AN AVERAGE RATE OF 627 LBS. PER SQ. YD.
S	PROP. SHOULDER RECONSTRUCTION
U	EXISTING PAVEMENT

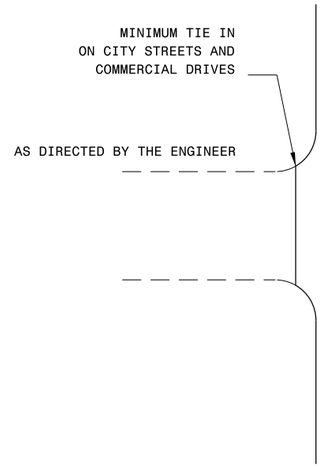

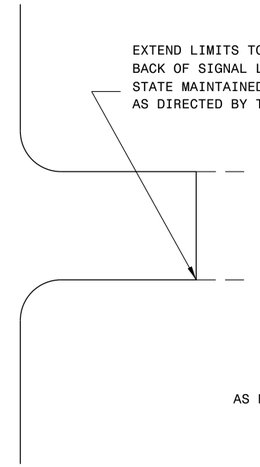

DETAIL OF PROJECT LIMITS AT SIGNALIZED Y LINES

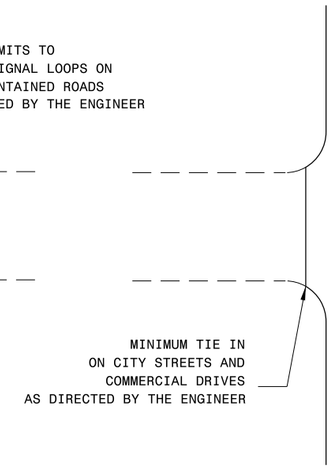

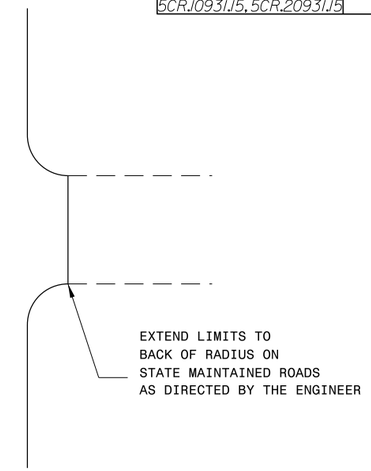

DETAIL OF PROJECT LIMITS AT UNSIGNALIZED Y LINES

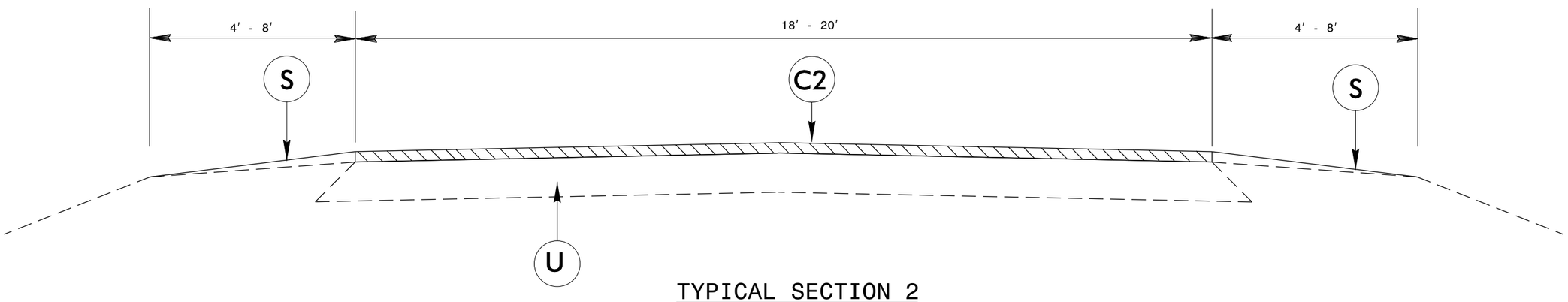

TYPICAL SECTION 2

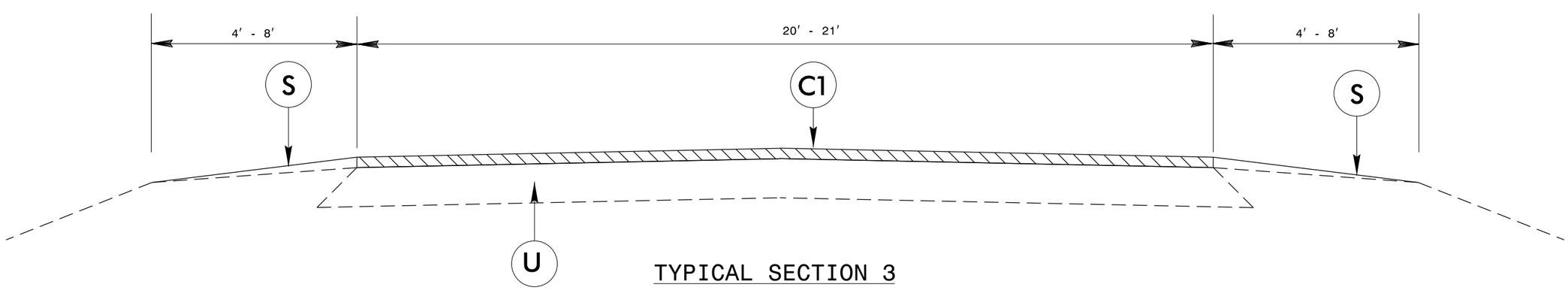

TYPICAL SECTION 3