PROJECT REFERENCE NO.	SHEET NO.
5CRJ093I,I5, 5CR.2093I,I5	3

PAVEMENT SCHEDULE

C1	1½" ASPHALT CONCRETE SURFACE COURSE, TYPE S9.5B, AT AN AVERAGE RATE OF 168 LBS. PER SQ. YD.
C2	1¼" ASPHALT CONCRETE SURFACE COURSE, TYPE SF9.5A, AT AN AVERAGE RATE OF 137.5 LBS. PER SQ. YD.
E	5.5" ASPHALT CONCRETE BASE COURSE, TYPE B25.0B, AT AN AVERAGE RATE OF 627 LBS. PER SQ. YD.
S	PROP. SHOULDER RECONSTRUCTION
U	EXISTING PAVEMENT

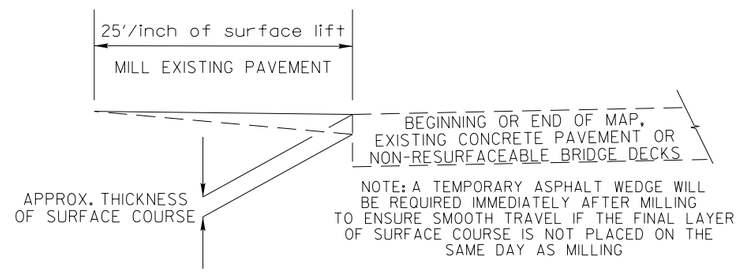

NOTES

ALL UNPAVED S.R. ROADS TO BE RESURFACED 50' FROM EDGE OF PAVEMENT OF MAIN PROJECT
ALL PAVED S.R. ROADS TO BE RESURFACED TO THE ENDS OF THE RADII, OR AS DIRECTED BY THE ENGINEER.
EDGES, PAVEMENT WIDENING, INTERSECTIONS AND BRIDGE FLARES ARE INCLUDED IN THE TABLE OF QUANTITIES.
BRIDGES TO BE RESURFACED AT LOCATIONS AND TO DEPTH AS DIRECTED BY THE ENGINEER.

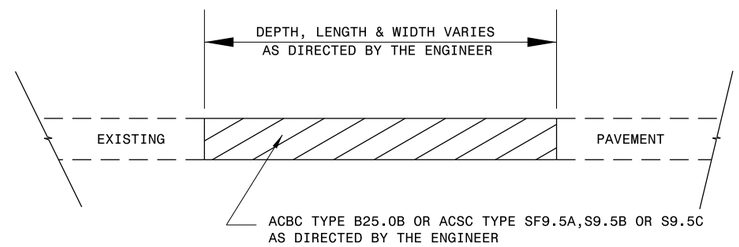

PATCHING EXISTING PAVEMENT

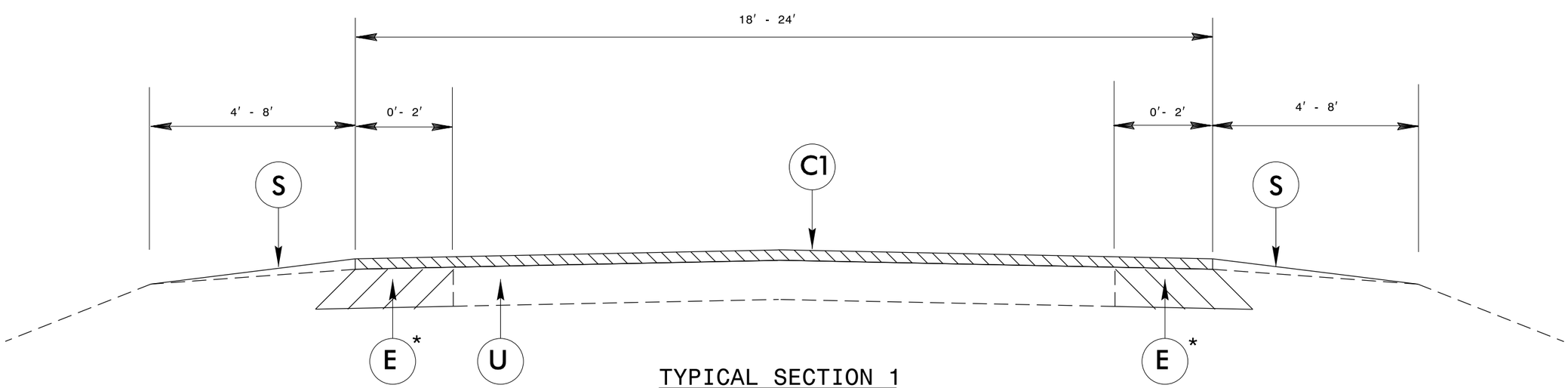

TYPICAL SECTION 1

* NO SPOT WIDENING WILL BE PLACED WITHIN THE HISTORIC BOUNDARIES OF BUXTON PLACE, CHERRY HILL, OR THE SOLOMAN AND KATE WILLIAMS HOUSE
* SPOT WIDENING TO BE PLACED AS DIRECTED BY THE ENGINEER