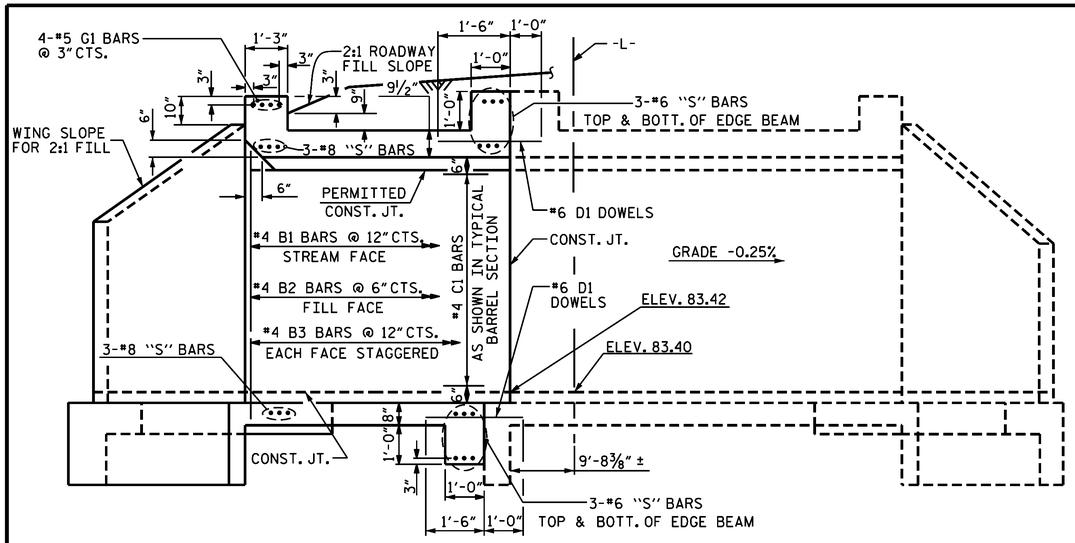

LEFT EXTENSION EXISTING CULVERT

CULVERT SECTION NORMAL TO ROADWAY

#6 D1 DOWELS SHALL BE PLACED @ 1'-6" CTS. IN THE ROOF SLAB, FLOOR SLAB, AND EXTERIOR WALLS TO CONNECT THE CULVERT EXTENSION TO THE EXISTING CULVERT.

SEE "EDGE BEAMS FOR CULVERT EXTENSIONS", FOR EDGE BEAM DETAILS.

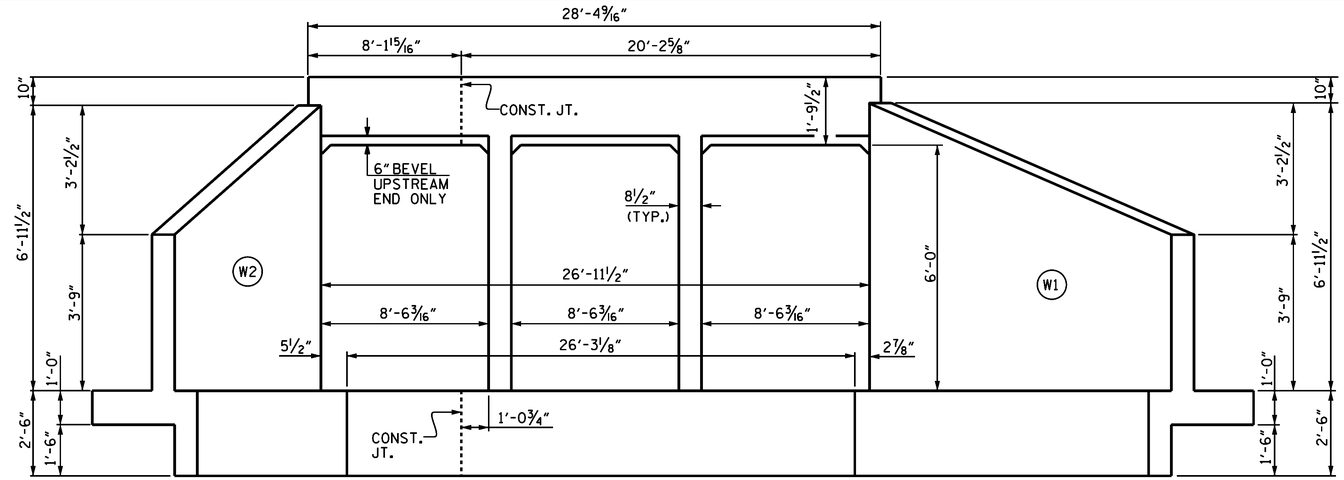

END ELEVATION NORMAL TO SKEW - INLET

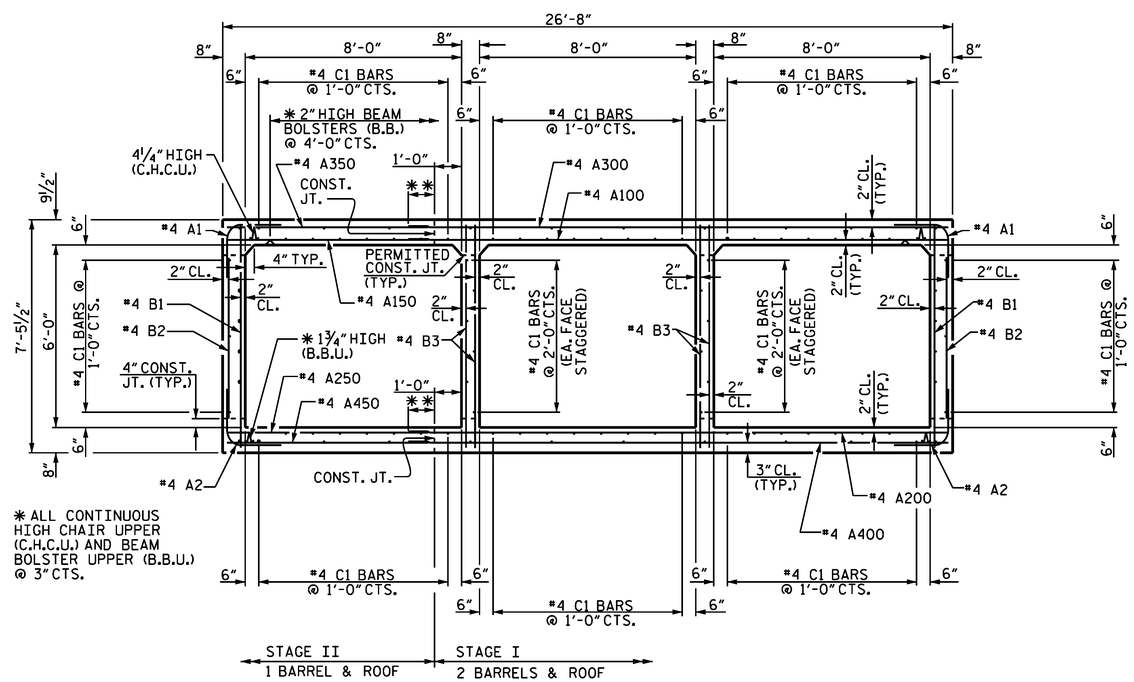

RIGHT ANGLE SECTION OF BARREL

THERE ARE 94 "C" BARS IN SECTION OF BARREL
✱✱ FOR SPLICE LENGTH, SEE CHART, SHEET 7 OF 9

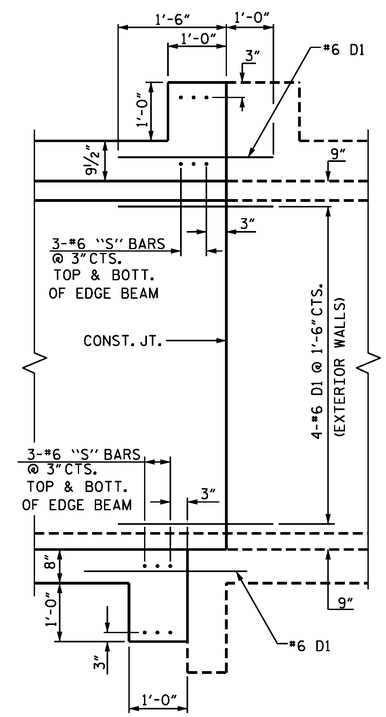

PROPOSED EXTENSION EXISTING BARREL

MULTIPLE BARREL CULVERT

EDGE BEAMS FOR CULVERT EXTENSIONS

PROJECT NO. B-5124
NASH COUNTY
STATION: 74+25.00 -L-

SHEET 2 OF 10

STATE OF NORTH CAROLINA
DEPARTMENT OF TRANSPORTATION
RALEIGH

CULVERT EXTENSION
TRIPLE 8'-0" X 6'-0"
CONCRETE BOX CULVERT
70° SKEW

NORTH CAROLINA PROFESSIONAL SEAL 14045 ENGINEER TIMOTHY L. COGGINS
3/9/2015
DocuSigned by: Tim Coggins
DEFD4A8D48FA47B...

REVISIONS							SHEET NO.
NO.	BY:	DATE:	NO.	BY:	DATE:		C-12
1			3				TOTAL SHEETS
2			4				20

STR. #5

ASSEMBLED BY : M. D. PISO	DATE : 06-20-14	SPECIAL	
CHECKED BY : K. P. SEDAI	DATE : 12-19-14		
DESIGN ENGINEER OF RECORD : K. P. SEDAI	DATE : 01-08-15		
DRAWN BY : R.F. HOLMES	DATE : NOV. 1971	STANDARD	
CHECKED BY : J.A. JOHNSON	DATE : NOV. 1971		

REVISED 11-19-99 BY M.A.M. CHECKED BY R.W.W.
REVISED 8-28-92 BY E.L.R. & BY G.R.P.
REDRAWN 10-6-89 BY R.W.W. & BY A.R.B.