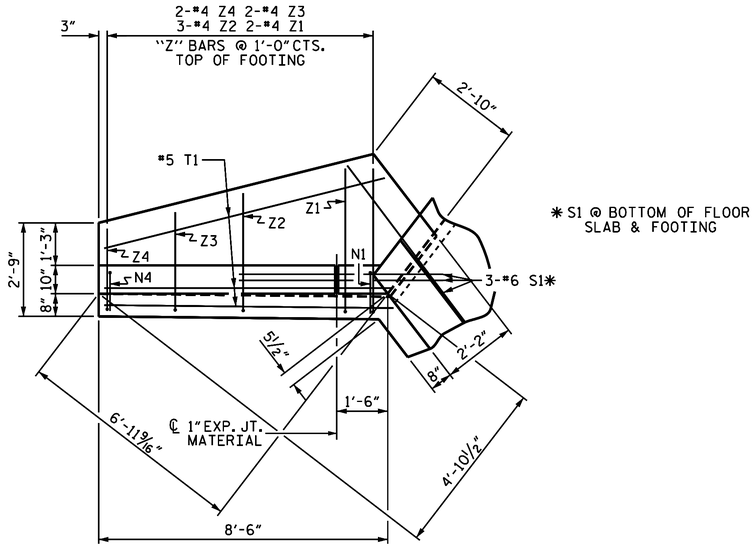

PLAN W2

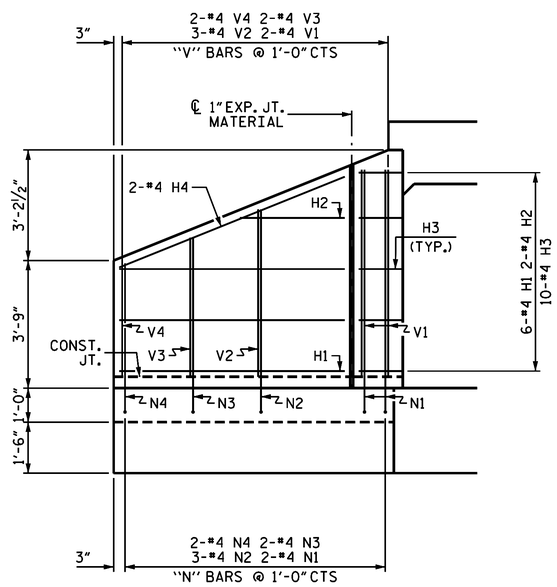

ELEVATION W2

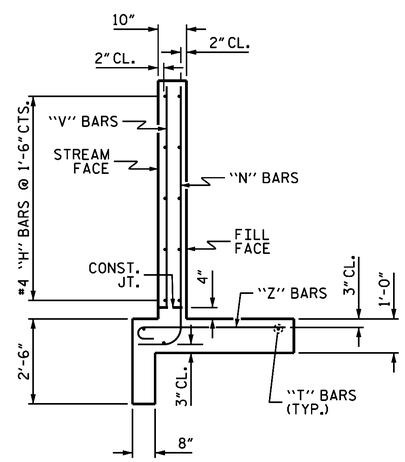

TYPICAL WING SECTION

BAR TYPES

ALL BAR DIMENSIONS ARE OUT TO OUT.

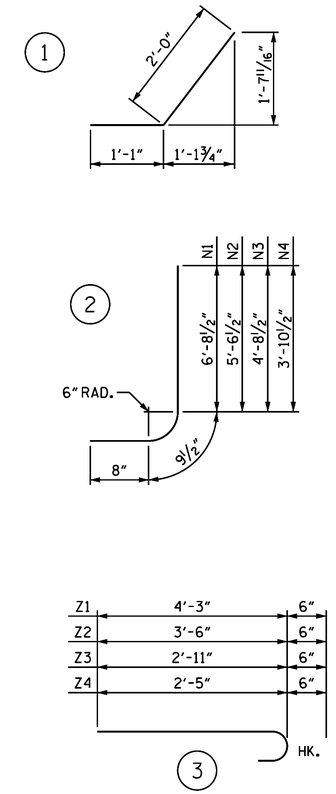

BILL OF MATERIAL (STAGE II)

BAR	NO.	SIZE	TYPE	LENGTH	WEIGHT
H1	6	#4	STR	6'-7"	26
H2	2	#4	STR	3'-1"	4
H3	10	#4	1	3'-1"	21
H4	2	#4	STR	7'-1"	9
N1	2	#4	2	8'-2"	11
N2	3	#4	2	7'-1"	14
N3	2	#4	2	6'-2"	8
N4	2	#4	2	5'-4"	7
S1	3	#6	STR	6'-0"	27
T1	3	#5	STR	8'-6"	27
V1	2	#4	STR	6'-1"	8
V2	3	#4	STR	4'-11"	10
V3	2	#4	STR	4'-1"	5
V4	2	#4	STR	3'-4"	4
Z1	2	#4	3	4'-9"	6
Z2	3	#4	3	4'-0"	8
Z3	2	#4	3	3'-5"	5
Z4	2	#4	3	2'-11"	4

REINFORCING STEEL FOR 1 WING 204 LBS

CLASS A CONCRETE

1 WING	3.1	CY
1 HEADWALL	0.4	CY
2 EDGE BEAMS	0.6	CY
1 END CURTAIN WALL	0.5	CY
TOTAL	4.6	CY

PROJECT NO. B-5124

NASH COUNTY

STATION: 74+25.00 -L-

SHEET 9 OF 10

STATE OF NORTH CAROLINA
DEPARTMENT OF TRANSPORTATION
RALEIGH

WING FOR CONCRETE BOX CULVERT

H = 6'-0" SLOPE = 2:1

70° SKEW HEADWALL

(STAGE II)

NORTH CAROLINA PROFESSIONAL SEAL 14045 ENGINEER TIMOTHY L. COGGINS

3/9/2015

DocuSigned by: Tim Coggins DEFD4A8D48FA47B...

REVISIONS								SHEET NO.
NO.	BY:	DATE:	NO.	BY:	DATE:			C-19
1			3					TOTAL SHEETS
2			4					20

STR. #5

DRAWN BY : K. P. SEDAI DATE : 12/19/14
CHECKED BY : M. D. PISO DATE : 12/22/14
DESIGN ENGINEER OF RECORD: K. P. SEDAI DATE : 12/23/14