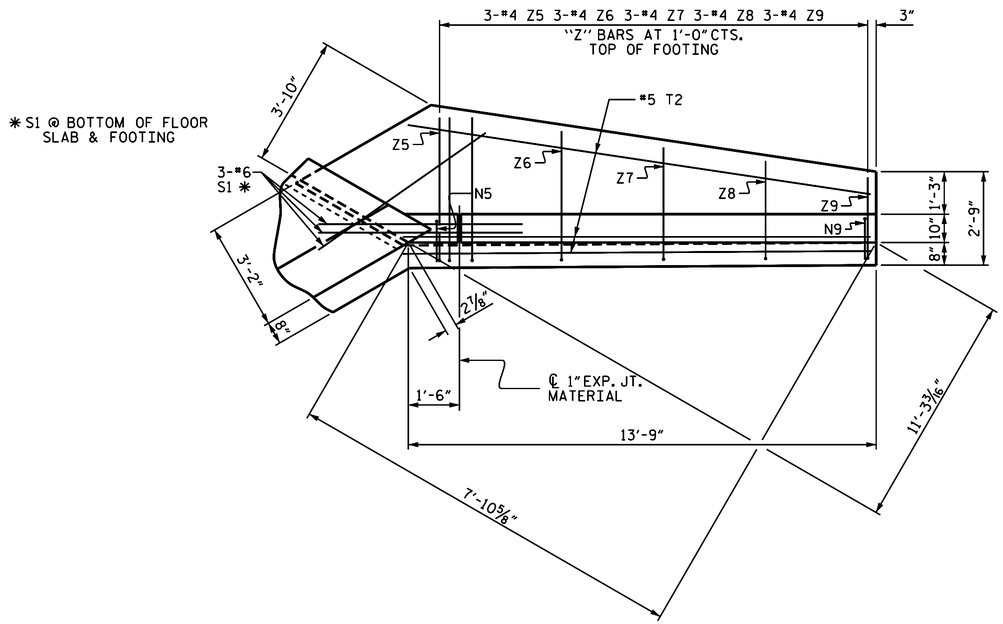

PLAN W1

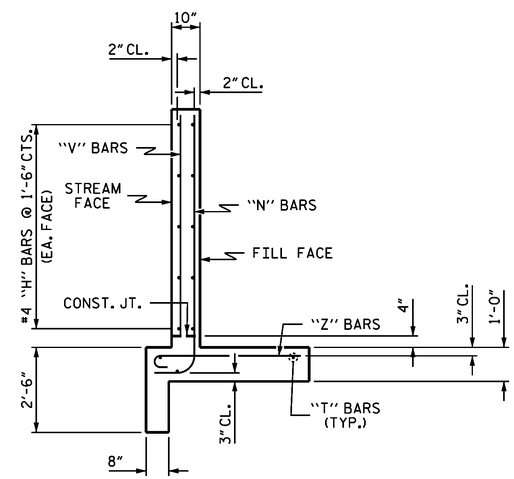

TYPICAL WING SECTION

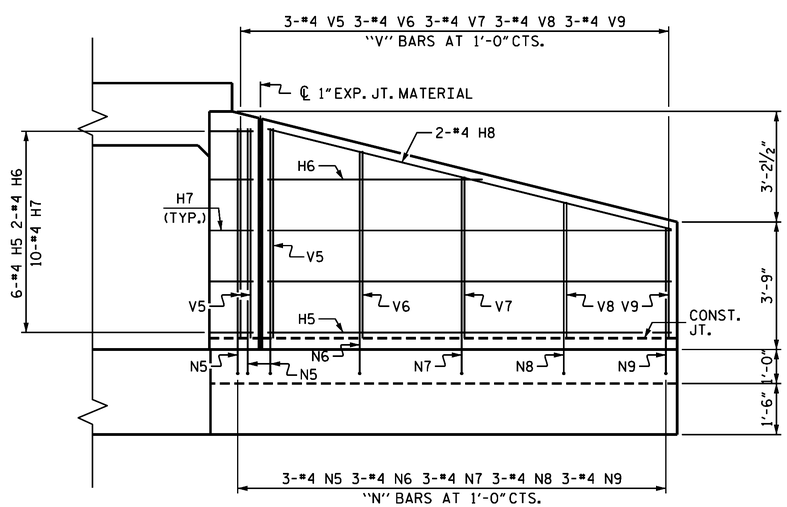

ELEVATION W1

BAR TYPES

ALL BAR DIMENSIONS ARE OUT TO OUT.

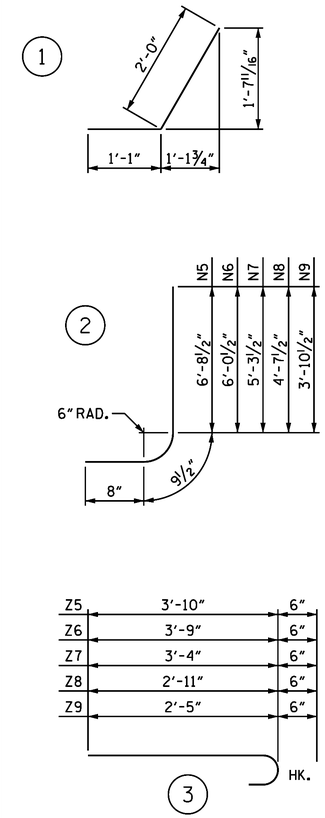

BILL OF MATERIAL (STAGE I)

BAR	NO.	SIZE	TYPE	LENGTH	WEIGHT
H5	6	#4	STR	11'-10"	47
H6	2	#4	STR	6'-3"	8
H7	10	#4	1	3'-1"	21
H8	2	#4	STR	12'-2"	16
N5	3	#4	2	8'-2"	16
N6	3	#4	2	7'-6"	15
N7	3	#4	2	6'-9"	14
N8	3	#4	2	6'-1"	12
N9	3	#4	2	5'-4"	11
S1	3	#6	STR	6'-0"	27
T2	3	#5	STR	13'-9"	43
V5	3	#4	STR	6'-2"	12
V6	3	#4	STR	5'-6"	11
V7	3	#4	STR	4'-9"	10
V8	3	#4	STR	4'-0"	8
V9	3	#4	STR	3'-3"	7
Z5	3	#4	3	4'-4"	9
Z6	3	#4	3	4'-3"	9
Z7	3	#4	3	3'-10"	8
Z8	3	#4	3	3'-5"	7
Z9	3	#4	3	2'-11"	6

REINFORCING STEEL FOR 1 WING 317 LBS

CLASS A CONCRETE

1 WING	4.9	CY
1 HEADWALL	0.9	CY
2 EDGE BEAMS	1.5	CY
1 END CURTAIN WALL	1.2	CY
TOTAL	8.5	CY

PROJECT NO. B-5124
NASH COUNTY
STATION: 74+25.00 -L-

SHEET 8 OF 10

STATE OF NORTH CAROLINA
DEPARTMENT OF TRANSPORTATION
RALEIGH

WING FOR CONCRETE BOX CULVERT

H = 6'-0" SLOPE = 2:1
70° SKEW HEADWALL
(STAGE I)

NORTH CAROLINA PROFESSIONAL SEAL 14045 ENGINEER TIMOTHY L. COGGINS
3/9/2015
DocuSigned by: Tim Coggins
DEFD4A8D48FA47B...

REVISIONS							SHEET NO.
NO.	BY:	DATE:	NO.	BY:	DATE:		C-18
1			3				TOTAL SHEETS
2			4				20

STR. #5

DRAWN BY : K. P. SEDAI DATE : 12/19/14
CHECKED BY : M. D. PISO DATE : 12/22/14
DESIGN ENGINEER OF RECORD: K. P. SEDAI DATE : 12/23/14