NOTES

STIRRUPS IN CAP MAY BE SHIFTED AS NECESSARY TO CLEAR DOWELS.

THE CONCRETE IN THE SHADED AREA OF THE WING SHALL BE POURED AFTER THE F SHAPE CONCRETE BARRIER RAIL IS CAST IF SLIP FORMING IS USED.

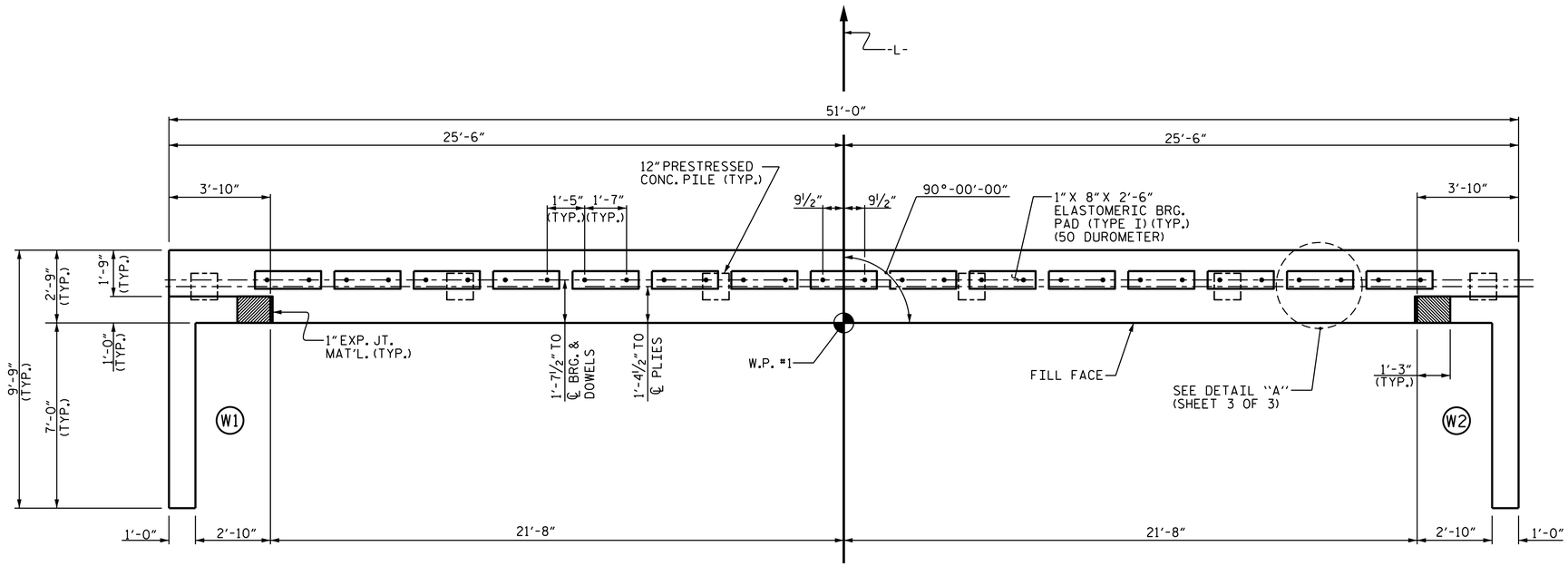

PLAN

TOP OF PILE ELEVATIONS	
1	91.85
2	91.66
3	91.47
4	91.27
5	90.08
6	90.89

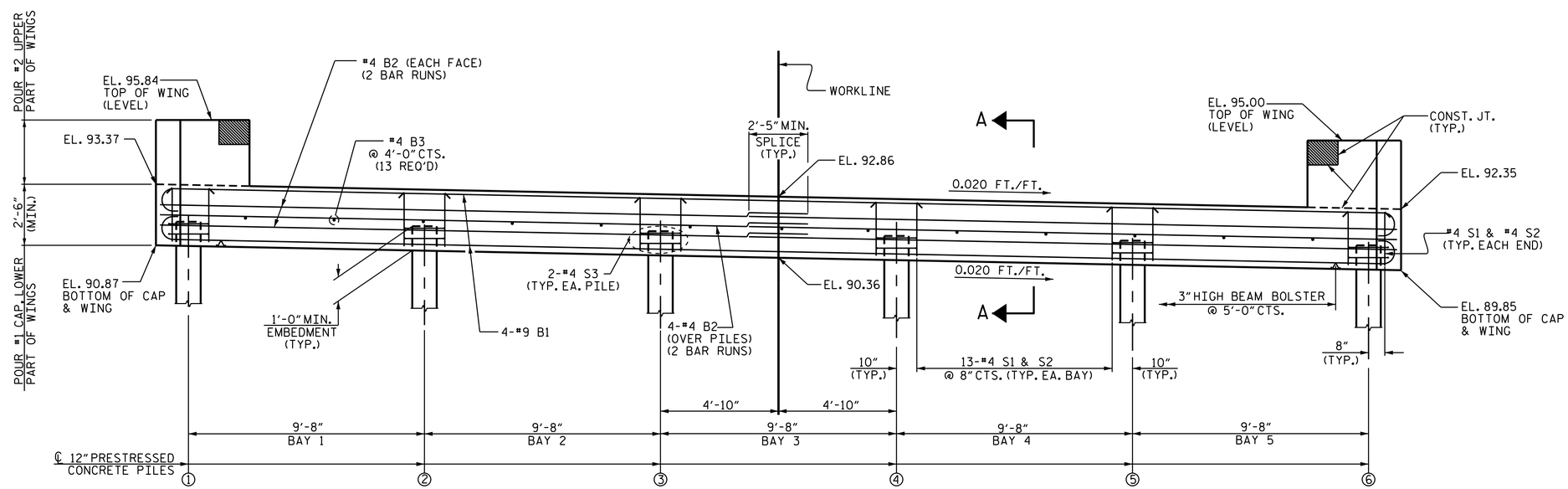

ELEVATION

FOR SECTION A-A, SEE SHEET 3 OF 3.

PROJECT NO. B-5124

NASH COUNTY

STATION: 54+85.50 -L-

SHEET 1 OF 3

STATE OF NORTH CAROLINA
DEPARTMENT OF TRANSPORTATION
RALEIGH

SUBSTRUCTURE

END BENT No. 1

NORTH CAROLINA PROFESSIONAL SEAL 14045 ENGINEER TIMOTHY L. COGGINS 3/9/2015

DocuSigned by: Tom Coggins DEFD4A8D48FA47B...

REVISIONS						SHEET NO.
NO.	BY:	DATE:	NO.	BY:	DATE:	S-59
1			3			TOTAL SHEETS
2			4			71

STR. #3

DRAWN BY :	M.D. PISO	DATE :	01-24-14
CHECKED BY :	D. GLADDEN	DATE :	12-11-14
DESIGN ENGINEER OF RECORD:	T.L. COGGINS, P.E.	DATE :	01/13/15

09-MAR-2015 09:27
R:\Structures\FinalPlans\DocuSign Setup\403_005_B-5124_SMU_S3-0.dgn
nruffin