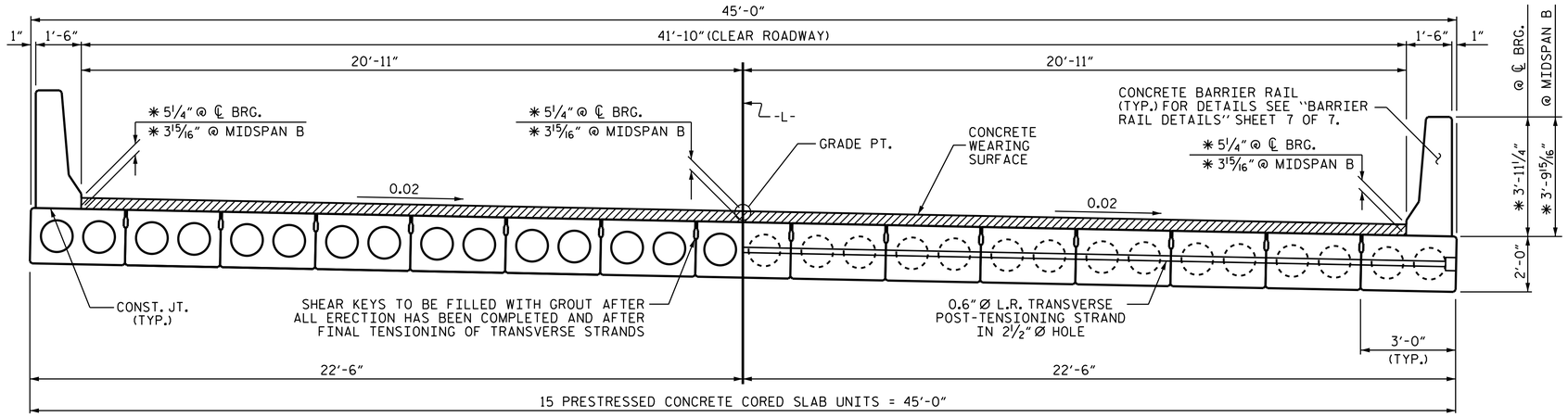

HALF SECTION
THROUGH VOIDS

HALF SECTION
AT INTERMEDIATE DIAPHRAGMS

TYPICAL SECTION

✱ - THE MINIMUM & MAXIMUM BARRIER RAIL HEIGHTS AND CONCRETE WEARING SURFACE THICKNESSES ARE SHOWN. THE HEIGHT OF THE BARRIER RAIL AND CONCRETE WEARING SURFACE THICKNESSES VARIES WHILE THE TOP OF THE BARRIER RAIL FOLLOWS THE PROFILE OF THE GUTTERLINE.

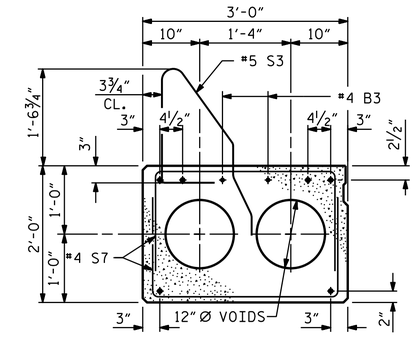

EXTERIOR SLAB SECTION (70' UNITS)

(FOR PRESTRESSED STRAND LAYOUT, SEE INTERIOR SLAB SECTION.)

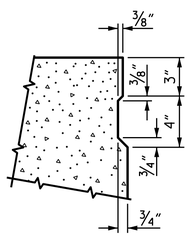

SHEAR KEY DETAIL

NOTE: OMIT SHEAR KEY ON OUTSIDE FACE OF EXTERIOR CORED SLABS.

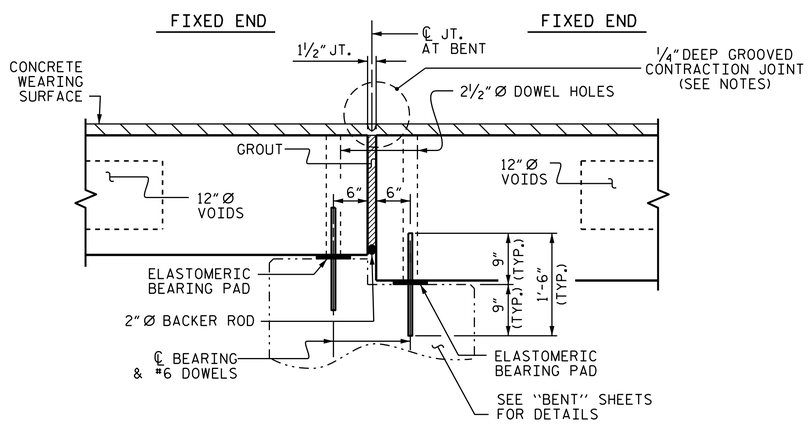

SECTION AT BENT No. 1

(BENT No. 2 SIMILAR BY ROTATION)

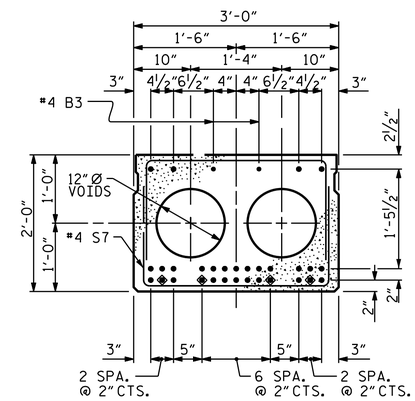

INTERIOR SLAB SECTION 70' UNIT SPAN B

(30 STRANDS REQUIRED)

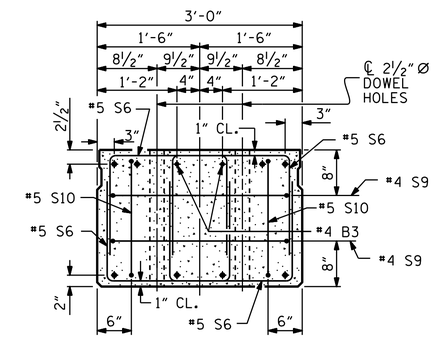

END ELEVATION

SHOWING PLACEMENT OF DOUBLE STIRRUPS AND LOCATION OF DOWEL HOLES. (STRAND LAYOUT NOT SHOWN.) INTERIOR SLAB UNIT SHOWN-EXTERIOR SLAB UNIT SIMILAR EXCEPT SHEAR KEY LOCATION.

PERMITTED THREADED INSERT CAST IN OUTSIDE FACE OF EXTERIOR UNIT AND RECESSED ⅜". SIZE TO BE DETERMINED BY CONTRACTOR.

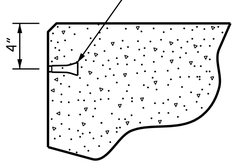

THREADED INSERT DETAIL

0.6" Ø LOW RELAXATION STRAND LAYOUT

◈ BOND SHALL BE BROKEN ON THESE STRANDS FOR A DISTANCE OF 12'-0" FROM END OF CORED SLAB UNIT. SEE STANDARD SPECIFICATIONS, ARTICLE 1078-7.

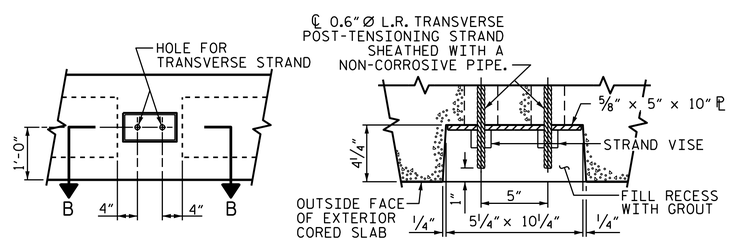

ELEVATION VIEW

SECTION B-B

GROUTED RECESS AT END OF POST-TENSIONED STRAND OF CORED SLABS

PROJECT NO. B-5124
NASH COUNTY
STATION: 54+85.50 -L-

SHEET 2 OF 7

STATE OF NORTH CAROLINA
DEPARTMENT OF TRANSPORTATION
RALEIGH

3'-0" X 2'-0" PRESTRESSED CONCRETE CORED SLAB UNIT
90° SKEW
(SPANS B)

NORTH CAROLINA PROFESSIONAL SEAL 14045 ENGINEER TIMOTHY L. COGGINS
3/9/2015
DocuSigned by: Tim Coggins
DEFD4A8D48FA47B...

REVISIONS						SHEET NO.
NO.	BY:	DATE:	NO.	BY:	DATE:	S-52
1			3			TOTAL SHEETS
2			4			71

STR. #3

ASSEMBLED BY :	M. D. PISO	DATE :	01-10-14
CHECKED BY :	D. G. ELY	DATE :	07-30-14
DESIGN ENGINEER OF RECORD:	K. P. SEDIA	DATE :	11-20-14
DRAWN BY : DGE 5/09	REV. 12/11	MAA/AAC	
CHECKED BY : BCH 6/09			

09-MAR-2015 09:27
R:\Structures\Final Plans\DocuSign Setup\403_005_B-5124_SMU_S3-0.dgn
nruffin