NOTES

FOR PRECAST CAP DETAILS AND BILL OF MATERIAL, SEE "PIECE B-01" & "PIECE B-02" SHEETS.

FOR GROUT FOR STRUCTURES, SEE SPECIAL PROVISIONS.

FOR 3'-0" x 2'-6" PRESTRESSED CONCRETE BENT CAPS, SEE SPECIAL PROVISIONS.

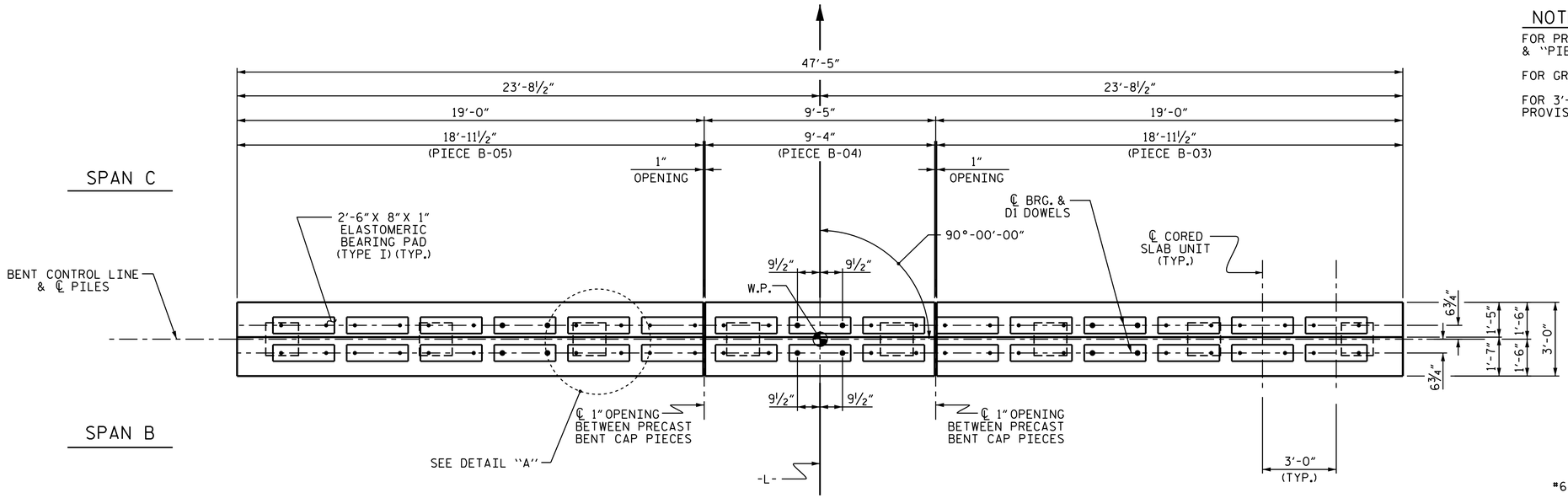

PLAN

(PILE BLOCKOUTS AND GROUT PIPES NOT SHOWN FOR CLARITY)

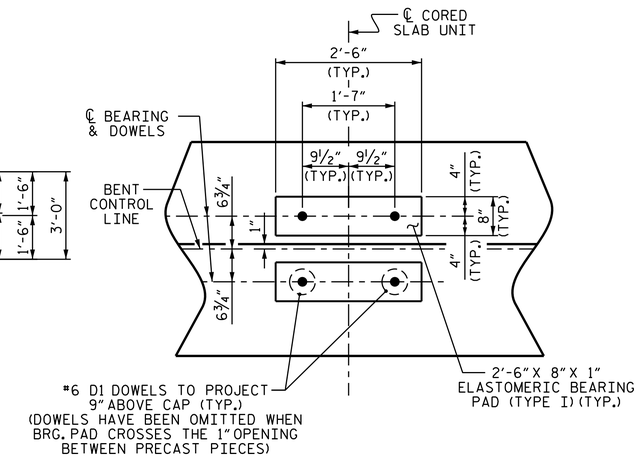

DETAIL "A"

(DIMENSIONS ARE TYPICAL EACH BEARING)

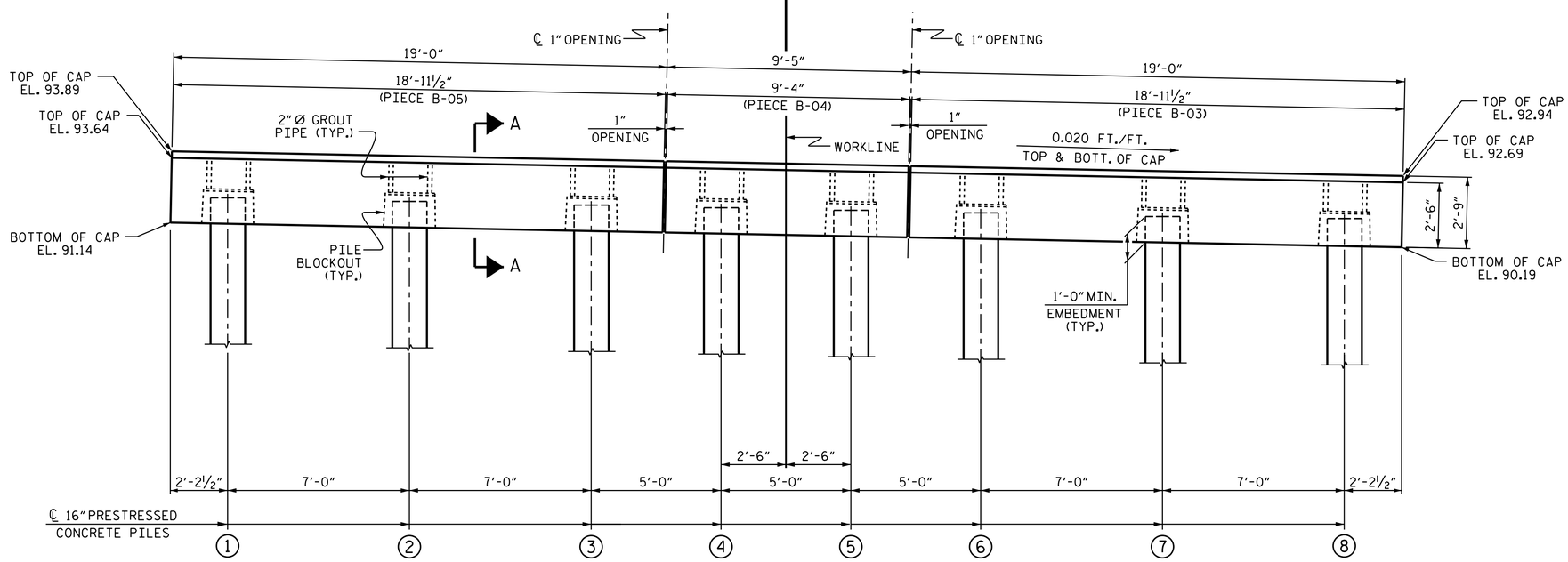

TOP OF PILE ELEVATIONS	
1	92.11
2	91.97
3	91.83
4	91.73
5	91.63
6	91.53
7	91.39
8	91.25

ELEVATION

FOR 2" Ø GROUT PIPE AND PILE BLOCKOUT DETAILS, SEE SHEET 6 OF 6
FOR SECTION A-A, SEE SHEET 6 OF 6.

THE CONCTRACTOR'S ATTENTION IS CALLED TO THE FACT THAT THE PRECAST PIECES ARE ORIENTED DIFFERENTLY FOR BENT No. 1 AND BENT No. 2.

NORTH CAROLINA PROFESSIONAL SEAL 025516 ENGINEER EMILY E. MURRAY
3/9/2015
DocuSigned by: Emily Murray
CAEB97AEDC5B4E0...

PROJECT NO. B-5124
NASH COUNTY
STATION: 54+85.50 -L-

SHEET 2 OF 6

STATE OF NORTH CAROLINA
DEPARTMENT OF TRANSPORTATION
RALEIGH

SUBSTRUCTURE
BENT No. 2
ALTERNATE 1

REVISIONS						SHEET NO.
NO.	BY:	DATE:	NO.	BY:	DATE:	S-64B
1			3			TOTAL SHEETS
2			4			71

DRAWN BY : M. A. ALLEN DATE : 3/15
CHECKED BY : E. E. MURRAY DATE : 3/15

09-MAR-2015 09:28
R:\Structures\FinalPlans\DocuSign Setup\403_005_B-5124_SMU_S3-0.dgn
nruffin

STR. #3