NOTES

STIRRUPS IN CAP MAY BE SHIFTED AS NECESSARY TO CLEAR DOWELS.

THE CONCRETE IN THE SHADED AREA OF THE WING SHALL BE POURED AFTER THE F SHAPE CONCRETE BARRIER RAIL IS CAST IF SLIP FORMING IS USED.

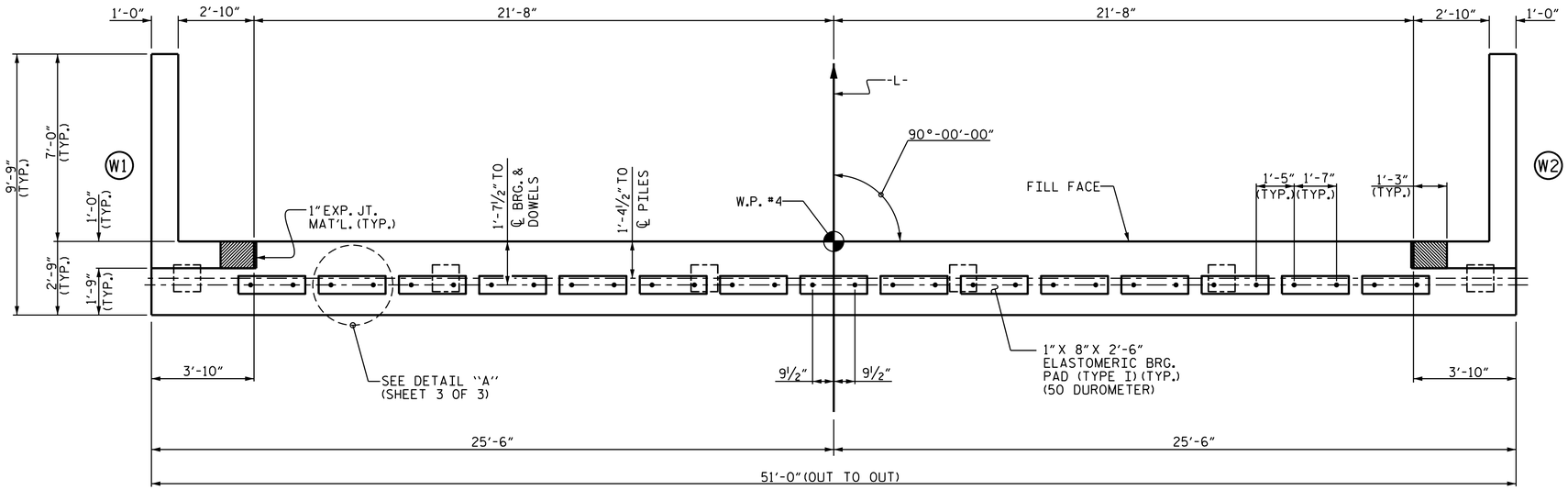

PLAN

TOP OF PILE ELEVATIONS	
1	92.58
2	92.39
3	92.20
4	91.00
5	91.81
6	91.62

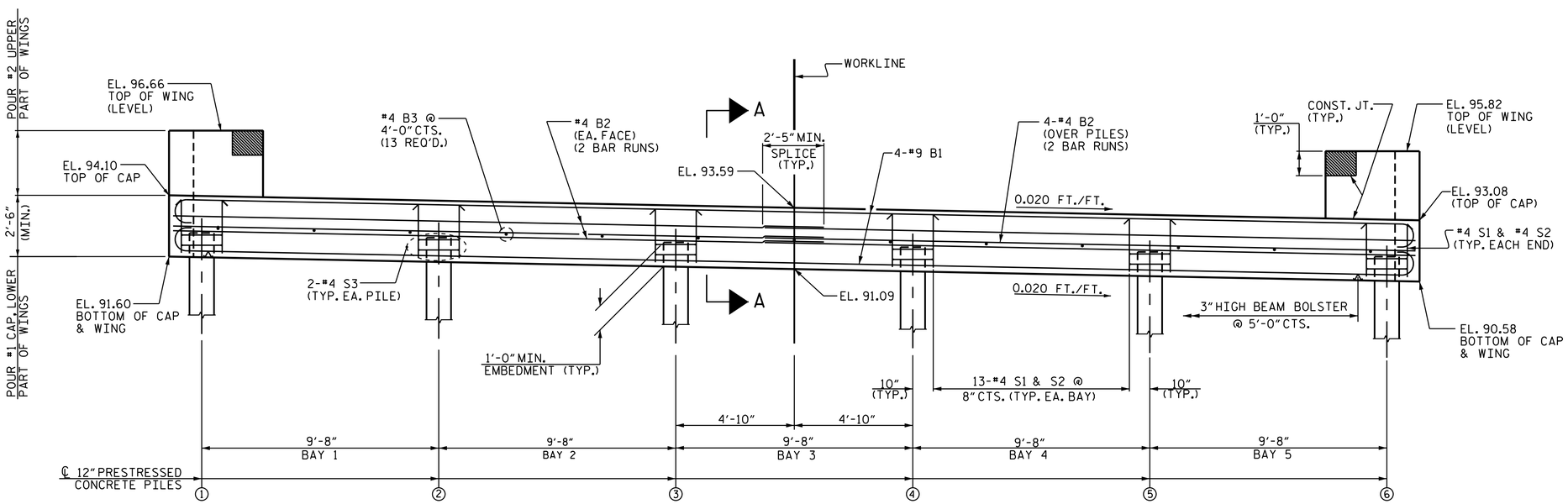

ELEVATION

FOR SECTION A-A, SEE SHEET 3 OF 3.

PROJECT NO. B-5124

NASH COUNTY

STATION: 54+85.50 -L-

SHEET 1 OF 3

STATE OF NORTH CAROLINA
DEPARTMENT OF TRANSPORTATION
RALEIGH

SUBSTRUCTURE

END BENT No. 2

NORTH CAROLINA PROFESSIONAL SEAL 14045 ENGINEER TIMOTHY L. COGGINS
3/9/2015

DocuSigned by: Tim Coggins
DEFD4A8D48FA47B...

REVISIONS								SHEET NO.
NO.	BY:	DATE:	NO.	BY:	DATE:			S-65
1			3					TOTAL SHEETS
2			4					71

STR.#3

DRAWN BY : M.D. PISO DATE : 01-24-14
CHECKED BY : D. GLADDEN DATE : 12-11-14
DESIGN ENGINEER OF RECORD: T.L. COGGINS, P.E. DATE : 01/13/15

09-MAR-2015 09:28
R:\Structures\Final Plans\DocuSign Setup\403_005_B-5124_SMU_S3-0.dgn
nruffin