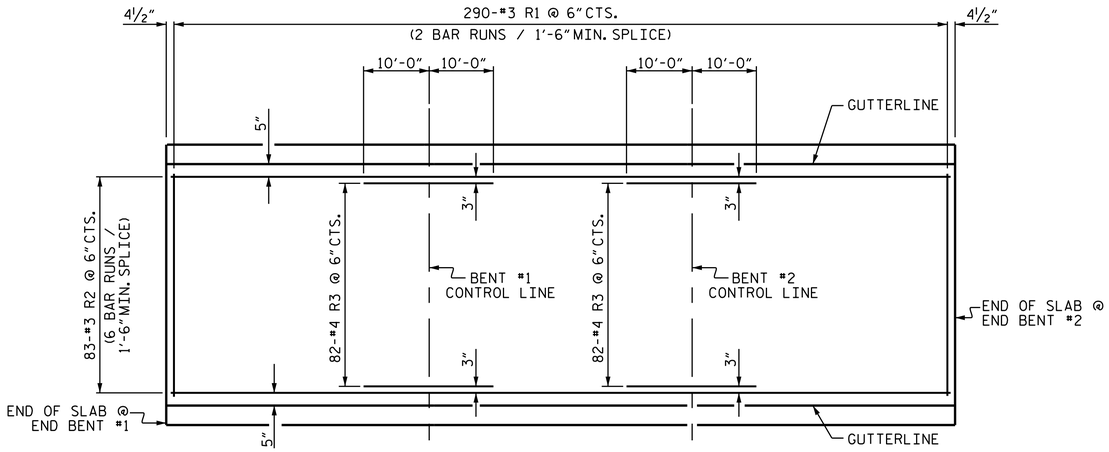

PLAN SHOWING CONCRETE WEARING SURFACE REINFORCING STEEL

BILL OF MATERIAL FOR CONCRETE WEARING SURFACE					
BAR	NO.	SIZE	TYPE	LENGTH	WEIGHT
✱R1	580	#3	STR	21'-6"	4,689
✱R2	498	#3	STR	25'-6"	4,775
✱R3	164	#4	STR	20'-0"	2,191
✱ EPOXY COATED REINFORCING STEEL				LBS.	11,655
CONCRETE WEARING SURFACE				SQ. FT.	6,076

SPLICE LENGTH CHART	
BAR SIZE	EPOXY COATED
#3	1'-6"

GROOVING BRIDGE FLOORS		
BRIDGE DECK	5,641	SQ. FT.
APPROACH SLAB	1,913	SQ. FT.
TOTAL	7,554	SQ. FT.

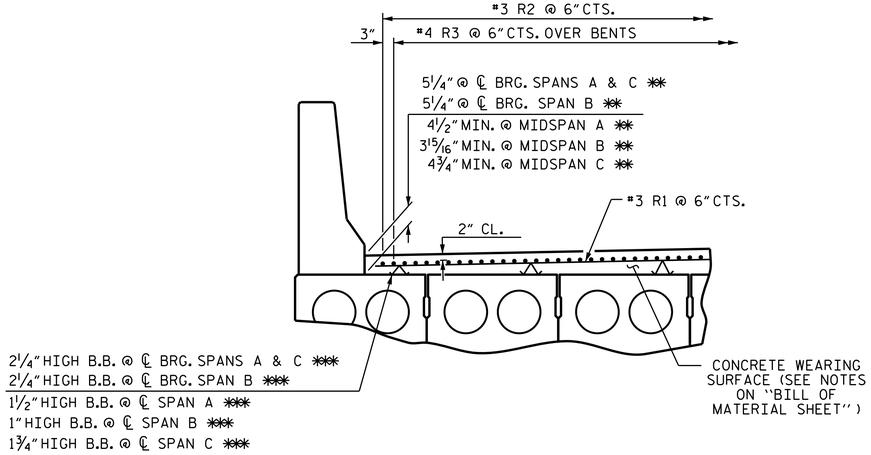

REINFORCING STEEL FOR CONCRETE WEARING SURFACE

✱✱ BASED ON PREDICTED FINAL CAMBER AND THEORETICAL GRADE LINE ELEVATIONS

✱✱✱ BEAM BOLSTERS (B.B.) SHALL BE SPACED AT 2'-0" CENTERS SET 1'-0" FROM GUTTERLINE.

THE HEIGHT OF THE CONCRETE WEARING SURFACE THICKNESS VARIES WHILE IT FOLLOWS THE PROFILE OF THE GUTTERLINE.

PLACEMENT OF THE CONCRETE WEARING SURFACE SHALL OCCUR AFTER CASTING THE CONCRETE BARRIER RAIL. THE COST OF THE #3 BARS AND #4 BARS CAST WITH THE CONCRETE WEARING SURFACE SHALL BE INCLUDED IN THE UNIT PRICE BID FOR CONCRETE WEARING SURFACE. FOR CONCRETE WEARING SURFACE, SEE SPECIAL PROVISIONS.

ALL REINFORCING STEEL IN THE CONCRETE WEARING SURFACE SHALL BE EPOXY COATED.

PROJECT NO. B-5124
NASH COUNTY
STATION: 54+85.50 -L-

SHEET 6 OF 7

STATE OF NORTH CAROLINA
DEPARTMENT OF TRANSPORTATION
RALEIGH

SUPERSTRUCTURE
CONCRETE WEARING SURFACE DETAILS

NORTH CAROLINA PROFESSIONAL SEAL 14045 ENGINEER TIMOTHY L. COGGINS
3/9/2015

DocuSigned by: Tim Coggins
DEFD4A8D48FA47B...

REVISIONS						SHEET NO.
NO.	BY:	DATE:	NO.	BY:	DATE:	S-56
1			3			TOTAL SHEETS
2			4			71

DRAWN BY :	M. D. PISO	DATE :	01-21-14
CHECKED BY :	D.G.ELY	DATE :	07-30-14
DESIGN ENGINEER OF RECORD:	K.P.SEDAI	DATE :	11-20-14

09-MAR-2015 09:27
R:\Structures\FinalPlans\DocuSign Setup\403_005_B-5124_SMU_S3-0.dgn
nruffin