NOTES

STIRRUPS IN CAP MAY BE SHIFTED AS NECESSARY TO CLEAR DOWELS.

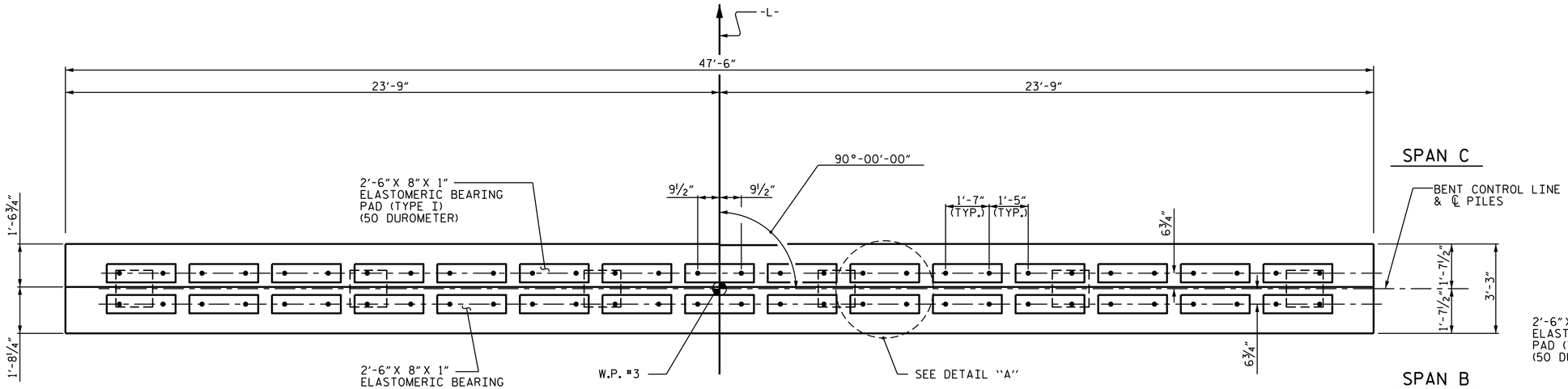

PLAN

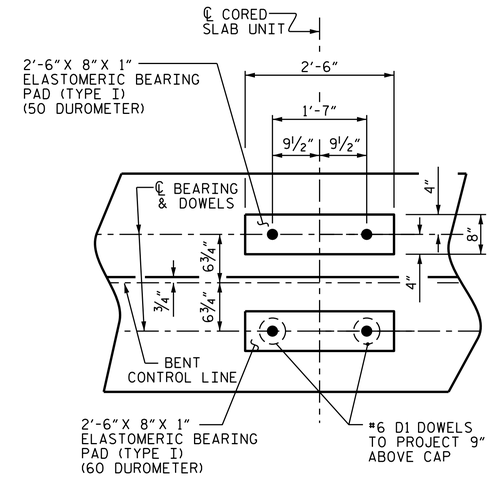

DETAIL "A"

(DIMENSIONS ARE TYPICAL EACH BEARING)

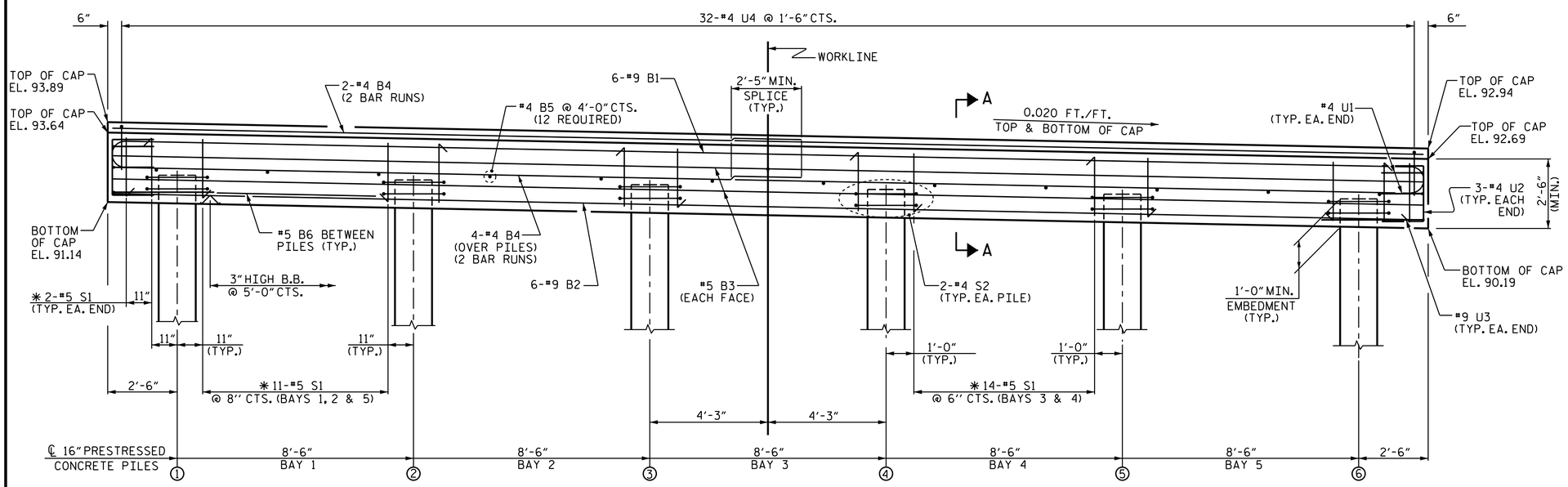

ELEVATION

✱ INVERT ALTERNATE STIRRUPS

TOP OF PILE ELEVATIONS	
1	92.10
2	91.93
3	91.76
4	91.59
5	91.42
6	91.25

NORTH CAROLINA PROFESSIONAL SEAL 14045 ENGINEER TIMOTHY L. COGGINS 3/9/2015

DocuSigned by: Tim Coggins DEFD4A8D48FA47B...

PROJECT NO. B-5124

NASH COUNTY

STATION: 54+85.50 -L-

SHEET 2 OF 3

STATE OF NORTH CAROLINA
DEPARTMENT OF TRANSPORTATION
RALEIGH

SUBSTRUCTURE

BENT No. 2

REVISIONS						SHEET NO.
NO.	BY:	DATE:	NO.	BY:	DATE:	S-63
1			3			TOTAL SHEETS
2			4			71

STR. #3

DRAWN BY : M.D .PISO DATE : 05-30-14
CHECKED BY : T.L. COGGINS, P.E. DATE : 12-04-14
DESIGN ENGINEER OF RECORD: DATE :

09-MAR-2015 09:28
R:\Structures\Final Plans\DocuSign Setup\403_005_B-5124_SMU_S3-0.dgn
nruffin