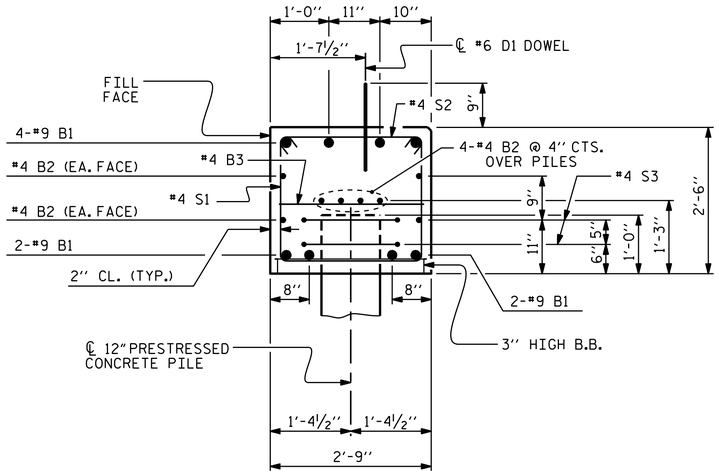

SECTION A-A

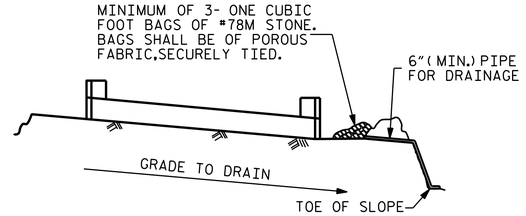

BAGGED STONE AND PIPE SHALL BE PLACED IMMEDIATELY AFTER COMPLETION OF END BENT EXCAVATION. PIPE MAY BE EITHER CONCRETE, CORRUGATED STEEL, CORRUGATED ALUMINUM ALLOY, OR CORRUGATED PLASTIC. PERFORATED PIPE WILL NOT BE ALLOWED.

BAGGED STONE SHALL REMAIN IN PLACE UNTIL THE ENGINEER DIRECTS THAT IT BE REMOVED. THE CONTRACTOR SHALL REMOVE AND DISPOSE OF SILT ACCUMULATIONS AT BAGGED STONE WHEN SO DIRECTED BY THE ENGINEER. BAGS SHALL BE REMOVED AND REPLACED WHENEVER THE ENGINEER DETERMINES THAT THEY HAVE DETERIORATED AND LOST THEIR EFFECTIVENESS.

NO SEPARATE PAYMENT WILL BE MADE FOR THIS WORK AND THE ENTIRE COST OF THIS WORK SHALL BE INCLUDED IN THE UNIT CONTRACT PRICE BID FOR THE SEVERAL PAY ITEMS.

TEMPORARY DRAINAGE AT END BENT

BAR TYPES

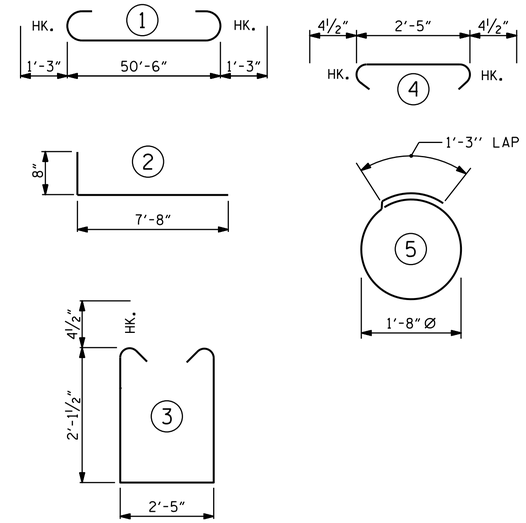

ALL BAR DIMENSIONS ARE OUT TO OUT.

BILL OF MATERIAL
END BENT No. 1

BAR	NO.	SIZE	TYPE	LENGTH	WEIGHT
B1	8	#9	1	53'-0"	1442
B2	16	#4	STR	26'-7"	284
B3	13	#4	STR	2'-5"	21
D1	30	#6	STR	1'-6"	68
H1	24	#4	2	8'-4"	134
K1	12	#4	STR	3'-6"	28
S1	67	#4	3	7'-5"	332
S2	67	#4	4	3'-2"	142
S3	12	#4	5	6'-6"	52
V1	24	#4	STR	4'-7"	73
V2	24	#4	STR	4'-9"	76

REINFORCING STEEL 2,652 LBS.

CLASS A CONCRETE BREAKDOWN

POUR #1
CAP, LOWER PART OF WINGS ▲ 14.1 CU.YDS.

POUR #2
UPPER PART OF WINGS 2.1 CU.YDS.

TOTAL CLASS A CONCRETE 16.2 CU.YDS.

12" PRESTRESSED CONCRETE PILES
NO: 6 LIN. FT. = 240

PILE REDRIVES 3 EA.

▲ CONCRETE DISPLACED BY THE 12" PRESTRESSED CONCRETE PILES HAS BEEN DEDUCTED FROM THE CLASS A CONCRETE QUANITY.

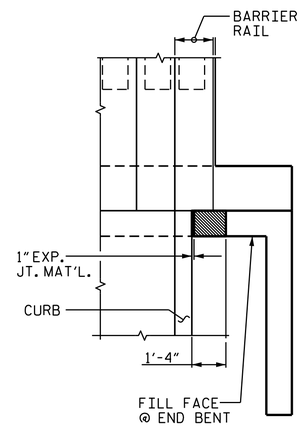

PLAN

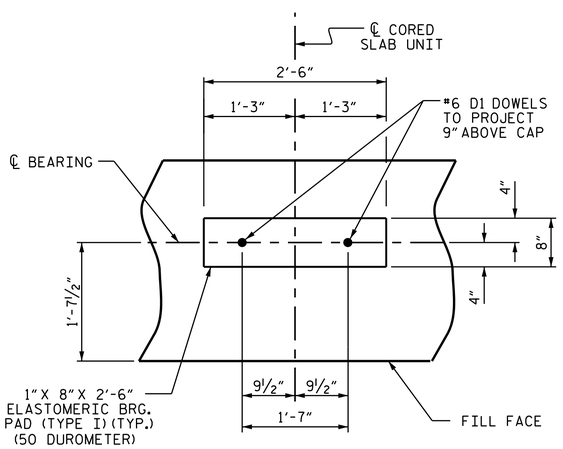

DETAIL "A"

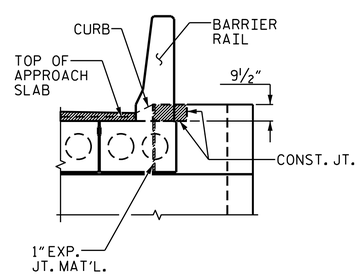

ELEVATION

BLOCKOUT IN WING WALL FOR CORED SLAB

PROJECT NO. B-5124
NASH COUNTY
STATION: 54+85.50 -L-

SHEET 3 OF 3

STATE OF NORTH CAROLINA
DEPARTMENT OF TRANSPORTATION
RALEIGH

SUBSTRUCTURE

END BENT No. 1
DETAILS

NORTH CAROLINA PROFESSIONAL SEAL 14045 ENGINEER TIMOTHY L. COGGINS
3/9/2015
DocuSigned by: Tim Coggins DEFD4A8D48FA47B...

REVISIONS						SHEET NO.
NO.	BY:	DATE:	NO.	BY:	DATE:	S-61
1			3			TOTAL SHEETS
2			4			71

ASSEMBLED BY : M.D. PISO DATE : 01-24-14
CHECKED BY : T.L. COGGINS, P.E. DATE : 11-17-14
DRAWN BY : DGE 02/10
CHECKED BY : MKT 02/10

09-MAR-2015 09:27
R:\Structures\FinalPlans\DocuSign Setup\403_005_B-5124_SMU_S3-0.dgn
nruffin

STR. #3