BILL OF MATERIAL FOR ONE 40' CORED SLAB 3'-0" X 1'-9" UNIT SPAN A

				EXTERIOR UNIT		INTERIOR UNIT	
BAR	NUMBER	SIZE	TYPE	LENGTH	WEIGHT	LENGTH	WEIGHT
B1	4	#4	STR	20'-9"	55	20'-9"	55
S1	8	#5	1	4'-3"	35	4'-3"	35
S2	84	#4	1	5'-4"	299	5'-4"	299
✱ S3	48	#5	2	5'-7"	280		
REINFORCING STEEL			LBS.		389		389
✱ EPOXY COATED REINFORCING STEEL			LBS.		280		
5000 P.S.I. CONCRETE			CU. YDS.		5.8		5.8
0.6" Ø L.R. STRANDS			No.		13		13

BILL OF MATERIAL FOR ONE 70' CORED SLAB 3'-0" X 2'-0" UNIT SPAN B

				EXTERIOR UNIT		INTERIOR UNIT	
BAR	NUMBER	SIZE	TYPE	LENGTH	WEIGHT	LENGTH	WEIGHT
B3	6	#4	STR	24'-5"	98	24'-5"	98
S6	8	#5	1	4'-9"	40	4'-9"	40
S7	144	#4	1	5'-10"	561	5'-10"	561
✱ S3	78	#5	2	5'-7"	454		
S9	4	#4	1	5'-7"	15	5'-7"	15
S10	4	#5	1	7'-1"	30	7'-1"	30
REINFORCING STEEL			LBS.		744		744
✱ EPOXY COATED REINFORCING STEEL			LBS.		454		
8000 P.S.I. CONCRETE			CU. YDS.		11.8		11.8
0.6" Ø L.R. STRANDS			No.		30		30

BILL OF MATERIAL FOR ONE 35' CORED SLAB 3'-0" X 1'-9" UNIT SPAN C

				EXTERIOR UNIT		INTERIOR UNIT	
BAR	NUMBER	SIZE	TYPE	LENGTH	WEIGHT	LENGTH	WEIGHT
B5	4	#4	STR	18'-3"	49	18'-3"	49
S1	8	#5	1	4'-3"	35	4'-3"	35
S2	74	#4	1	5'-4"	264	5'-4"	264
✱ S3	43	#5	2	5'-7"	250		
REINFORCING STEEL			LBS.		348		348
✱ EPOXY COATED REINFORCING STEEL			LBS.		250		
5000 P.S.I. CONCRETE			CU. YDS.		5.1		5.1
0.6" Ø L.R. STRANDS			No.		11		11

BILL OF MATERIAL FOR CONCRETE BARRIER RAIL

BAR	BARS PER PAIR OF EXTERIOR UNITS	TOTAL NO.	SIZE	TYPE	LENGTH	WEIGHT
	40' UNIT (3'-0" X 1'-9") SPAN A					
✱ B2	44	44	#5	STR	19'-7"	899
✱ S4	88	88	#5	3	7'-0"	642
✱ S5	8	8	#5	3	5'-6"	46
✱ EPOXY COATED REINFORCING STEEL				LBS.		1,587
CLASS AA CONCRETE				CU.YDS.		11.5
TOTAL CONCRETE BARRIER RAIL				LN. FT.		80.12

BILL OF MATERIAL FOR CONCRETE BARRIER RAIL

BAR	BARS PER PAIR OF EXTERIOR UNITS	TOTAL NO.	SIZE	TYPE	LENGTH	WEIGHT
	70' UNIT (3'-0" X 2'-0") SPAN B					
✱ B4	66	66	#5	STR	22'-11"	1,578
✱ S4	156	156	#5	3	7'-0"	1,139
✱ EPOXY COATED REINFORCING STEEL				LBS.		2,717
CLASS AA CONCRETE				CU.YDS.		20.4
TOTAL CONCRETE BARRIER RAIL				LN. FT.		140.26

BILL OF MATERIAL FOR CONCRETE BARRIER RAIL

BAR	BARS PER PAIR OF EXTERIOR UNITS	TOTAL NO.	SIZE	TYPE	LENGTH	WEIGHT
	35' UNIT (3'-0" X 1'-9") SPAN C					
✱ B6	44	44	#5	STR	17'-1"	784
✱ S4	78	78	#5	3	7'-0"	569
✱ S5	8	8	#5	3	5'-6"	46
✱ EPOXY COATED REINFORCING STEEL				LBS.		1,399
CLASS AA CONCRETE				CU.YDS.		10.1
TOTAL CONCRETE BARRIER RAIL				LN. FT.		70.12

BAR TYPES

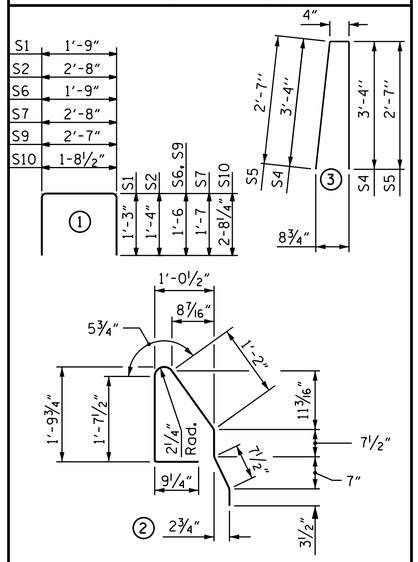

ALL BAR DIMENSIONS ARE OUT TO OUT

NOTES

ALL PRESTRESSING STRANDS SHALL BE 7-WIRE LOW RELAXATION GRADE 270 STRANDS AND SHALL CONFORM TO AASHTO M203 EXCEPT FOR SAMPLING REQUIREMENTS WHICH SHALL BE IN ACCORDANCE WITH THE STANDARD SPECIFICATIONS.

ALL REINFORCING STEEL CAST WITH THE CORED SLAB SECTIONS SHALL BE GRADE 60 AND SHALL BE INCLUDED IN THE UNIT PRICE BID FOR PRESTRESSED CONCRETE CORED SLABS.

RECESSES FOR TRANSVERSE STRANDS SHALL BE GROUTED AFTER THE TENSIONING OF THE STRANDS.

THE 2½" Ø DOWEL HOLES AT FIXED ENDS OF SLAB SECTIONS SHALL BE FILLED WITH GROUT.

THE BACKER RODS SHALL CONFORM TO THE REQUIREMENTS OF TYPE M BOND BREAKER, SEE SECTION 1028 OF THE STANDARD SPECIFICATIONS.

THE JOINT SEALER MATERIAL SHALL CONFORM TO THE REQUIREMENTS OF TYPE SL LOW MODULUS SILICONE SEALANT.

WHEN CORED SLABS ARE CAST, AN INTERNAL HOLD-DOWN SYSTEM SHALL BE EMPLOYED TO PREVENT VOIDS FROM RISING OR MOVING SIDEWAYS. AT LEAST SIX WEEKS PRIOR TO CASTING CORED SLABS, THE CONTRACTOR SHALL SUBMIT TO THE ENGINEER FOR REVIEW AND COMMENT, DETAILED DRAWINGS OF THE PROPOSED HOLD-DOWN SYSTEM. IN ADDITION TO STRUCTURAL DETAILS, LOCATION AND SPACING OF THE HOLD-DOWNS SHALL BE INDICATED.

WHEN A CONCRETE WEARING SURFACE IS DETAILED ON THE CORED SLAB BRIDGE TYPICAL SECTION, THE TOP SURFACE OF THE CORED SLAB UNITS SHALL HAVE A ⅜" RAKED FINISH.

THE TRANSFER OF LOAD FROM THE ANCHORAGES TO THE CORED SLAB UNIT SHALL BE DONE WHEN THE CONCRETE HAS REACHED A COMPRESSIVE STRENGTH OF NOT LESS THAN 4000 PSI FOR SPANS A & C AND 6000 PSI FOR SPAN B.

ALL REINFORCING STEEL IN BARRIER RAILS SHALL BE EPOXY COATED.

PRESTRESSING STRANDS SHALL BE CUT FLUSH WITH THE CORED SLAB UNIT ENDS.

APPLY EPOXY PROTECTIVE COATING TO CORED SLAB UNIT ENDS.

GROOVED CONTRACTION JOINTS, ½" IN DEPTH, SHALL BE TOOLED IN ALL EXPOSED FACES OF THE BARRIER RAIL AND IN ACCORDANCE WITH ARTICLE 825-10(B) OF THE STANDARD SPECIFICATIONS. A CONTRACTION JOINT SHALL BE LOCATED AT EACH THIRD POINT BETWEEN BARRIER RAIL EXPANSION JOINTS. ONLY ONE CONTRACTION JOINT IS REQUIRED AT MIDPOINT OF BARRIER RAIL SEGMENTS LESS THAN 20 FEET IN LENGTH AND NO CONTRACTION JOINTS ARE REQUIRED FOR THOSE SEGMENTS LESS THAN 10 FEET IN LENGTH.

FOR GROUT FOR STRUCTURES, SEE SPECIAL PROVISIONS.

IN THE 3'-0" X 2'-0" UNITS, MAINTAIN A SYMMETRIC TENSION FORCE BETWEEN EACH PAIR OF TRANSVERSE POST TENSIONING STRANDS IN THE DIAPHRAGM.

IN THE 3'-0" X 2'-0" UNITS, THE #4 S7 AND #5 S3 STIRRUPS MAY BE SHIFTED AS NECESSARY TO MAINTAIN 1" CLEAR TO THE GROUTED RECESS.

FLAME CUTTING OF THE TRANSVERSE POST-TENSIONING STRAND IS NOT ALLOWED.

THE PERMITTED THREADED INSERTS ARE DETAILED AS AN OPTION FOR THE CONTRACTOR TO ATTACH FALSEWORK AND FORMWORK DURING CONSTRUCTION.

THE PERMITTED THREADED INSERTS IN THE EXTERIOR UNITS SHALL BE SIZED BY THE CONTRACTOR, SPACED AT 4'-0" CENTERS AND GALVANIZED IN ACCORDANCE WITH SECTION 1076 OF THE STANDARD SPECIFICATIONS. STAINLESS STEEL THREADED INSERTS MAY BE USED AS AN ALTERNATE.

THE PERMITTED THREADED INSERTS SHALL BE GROUTED BY THE CONTRACTOR IMMEDIATELY FOLLOWING REMOVAL OF THE FALSEWORK.

THE COST OF THE PERMITTED THREADED INSERTS SHALL BE INCLUDED IN THE PRICE BID FOR THE PRECAST UNITS.

CORED SLABS REQUIRED

40' UNIT	3'-0" X 1'-9"		
SPAN A	NUMBER	LENGTH	TOTAL LENGTH
EXTERIOR C.S.	2	40'-0"	80'-0"
INTERIOR C.S.	13	40'-0"	520'-0"
TOTAL	15		600'-0"

CORED SLABS REQUIRED

70' UNIT	3'-0" X 2'-0"		
SPAN B	NUMBER	LENGTH	TOTAL LENGTH
EXTERIOR C.S.	2	70'-0"	140'-0"
INTERIOR C.S.	13	70'-0"	910'-0"
TOTAL	15		1050'-0"

CORED SLABS REQUIRED

35' UNIT	3'-0" X 1'-9"		
SPAN C	NUMBER	LENGTH	TOTAL LENGTH
EXTERIOR C.S.	2	35'-0"	70'-0"
INTERIOR C.S.	13	35'-0"	455'-0"
TOTAL	15		525'-0"

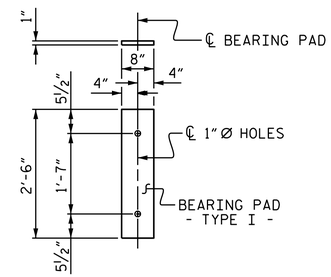

FIXED END
(TYPE I - 90 REQ'D)

ELASTOMERIC BEARING DETAILS

60 - 50 DUROMETER
30 - 60 DUROMETER

GRADE 270 STRANDS

	0.6" Ø L.R.
AREA (SQUARE INCHES)	0.217
ULTIMATE STRENGTH (LBS. PER STRAND)	58,600
APPLIED PRESTRESS (LBS. PER STRAND)	43,950

DEAD LOAD DEFLECTION AND CAMBER

0.6" Ø L.R. STRAND	3'-0" x 1'-9" 40' UNIT SPAN A	3'-0" x 2'-0" 70' UNIT SPAN B	3'-0" x 1'-9" 35' UNIT SPAN C
CAMBER (SLAB ALONE IN PLACE)	⅞" ↑	1⅞" ↑	9/16" ↑
DEFLECTION DUE TO CONCRETE WEARING SURFACE	1/16" ↓	⅜" ↓	1/16" ↓
FINAL CAMBER	13/16" ↑	1½" ↑	½" ↑

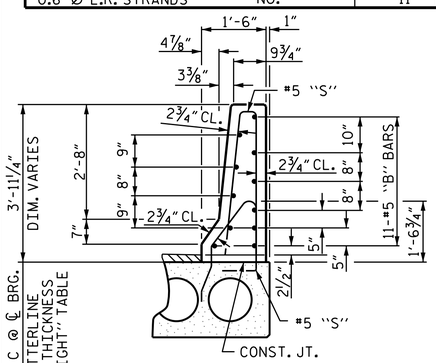

SECTION THRU RAIL

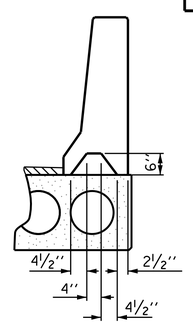

SECTION S-S
AT DAM IN OPEN JOINT
(THIS IS TO BE USED ONLY WHEN SLIP FORM IS USED)

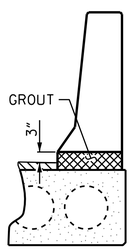

SECTION T-T
AT OPEN JOINT AT BENT
(THIS IS TO BE USED WHERE FOAM JOINT IS NOT USED)

BARRIER RAIL DETAILS

GUTTERLINE CONCRETE THICKNESS & RAIL HEIGHT

41'-10" CLEAR ROADWAY	CONCRETE WEARING SURFACE THICKNESS	RAIL HEIGHT
	@ MID-SPAN	@ MID-SPAN
	SUPERED SECTION	
40' UNITS - SPAN A	4½"	3'-10½"
70' UNITS - SPAN B	3 15/16"	3'-9 15/16"
35' UNITS - SPAN C	4¾"	3'-10¾"

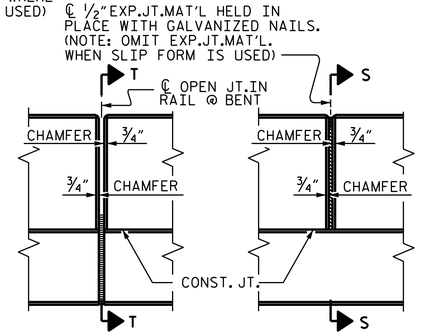

ELEVATION AT EXPANSION JOINTS

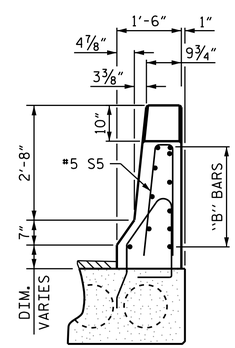

END VIEW

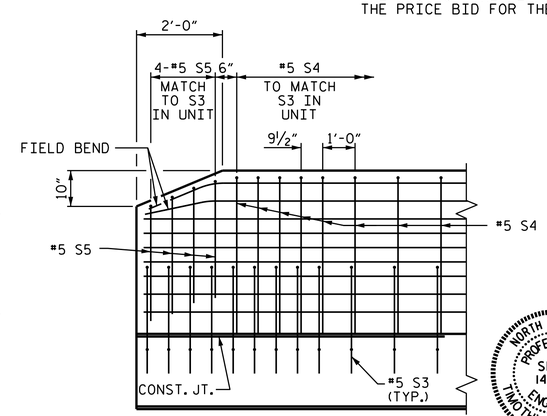

SIDE VIEW

END OF RAIL DETAILS

NORTH CAROLINA PROFESSIONAL SEAL 14045 ENGINEER TIMOTHY L. COGGINS
3/9/2015
DocuSigned by: Tim Coggins
DEFD4A8D48F447B...

PROJECT NO. B-5124
NASH COUNTY
STATION: 54+85.50 -L-

SHEET 7 OF 7

STATE OF NORTH CAROLINA
DEPARTMENT OF TRANSPORTATION
RALEIGH

SUPERSTRUCTURE
3'-0" X 1'-9"
AND
3'-0" X 2'-0"
PRESTRESSED CONCRETE
CORED SLAB UNITS

REVISIONS						SHEET NO.
NO.	BY:	DATE:	NO.	BY:	DATE:	S-57
1			3			TOTAL SHEETS
2			4			71

ASSEMBLED BY : M. D. PISO DATE : 02-05-14
CHECKED BY : D. G. ELY DATE : 07-30-14
DESIGN ENGINEER OF RECORD : K. P. SEDAI DATE : 11-20-14

DRAWN BY : WJH 4/89
CHECKED BY : FCJ 5/89

REV. 10/11/11 MAA/GM
REV. 10/12 MAA/GM
REV. 6/13 MAA/GM

09-MAR-2015 09:27
R:\Structures\Final Plans\DocuSign Setup\403_005_B-5124_SMU_S3-0.dgn
nruffin

STR. #3

STD. NO. PCS3