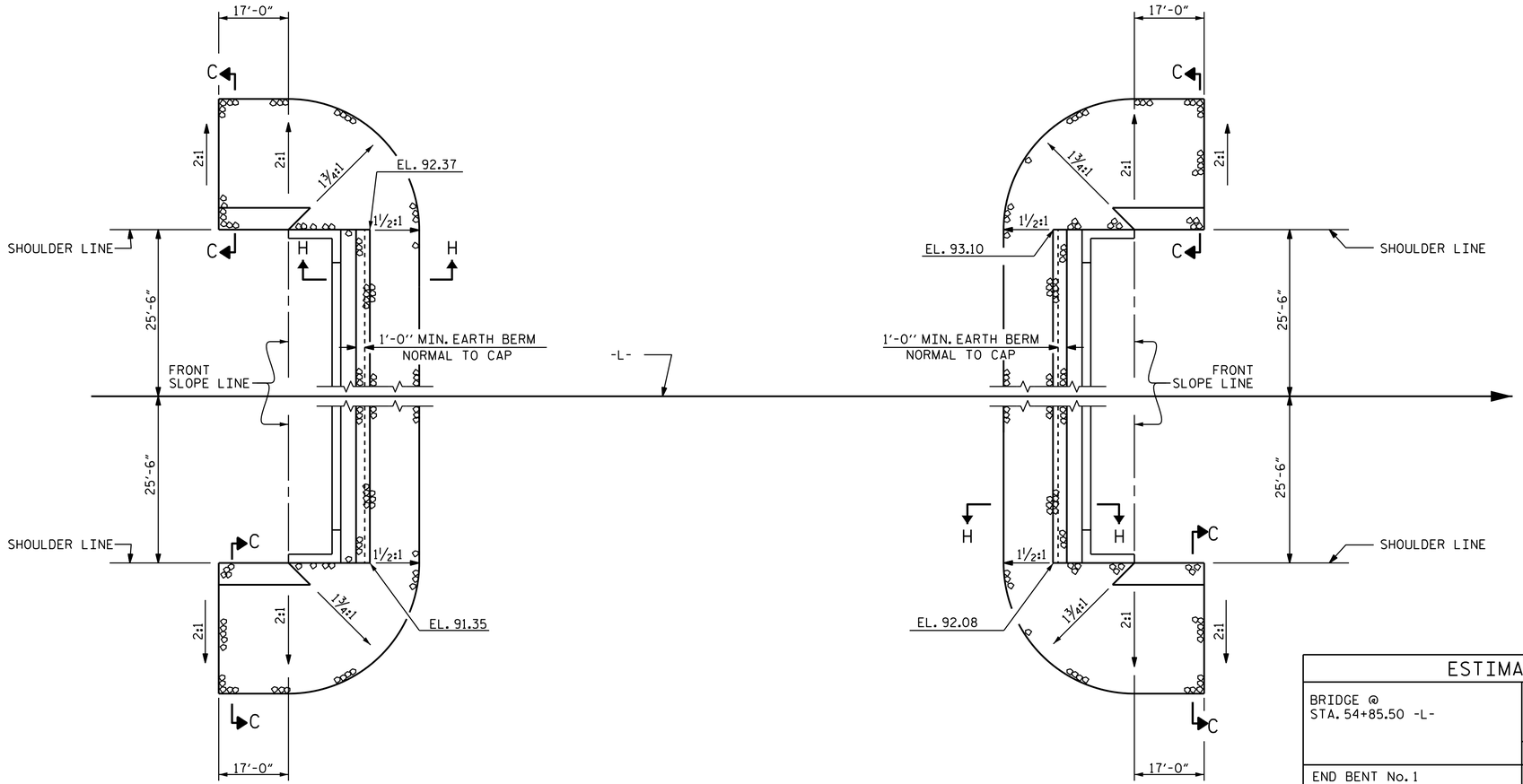

END BENT No. 1

END BENT No. 2

RIP RAP

ESTIMATED QUANTITIES		
BRIDGE @ STA. 54+85.50 -L-	RIP RAP CLASS II (2'-0" THICK)	GEOTEXTILE FOR DRAINAGE
	TONS	SQUARE YARDS
END BENT No. 1	190	211
END BENT No. 2	210	233

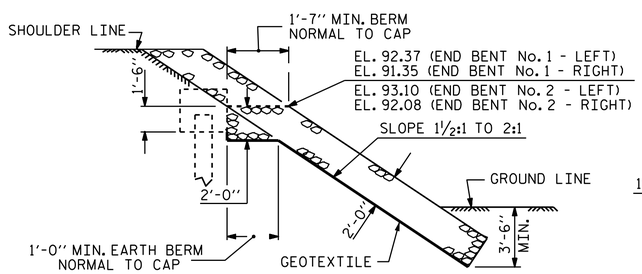

SECTION H-H

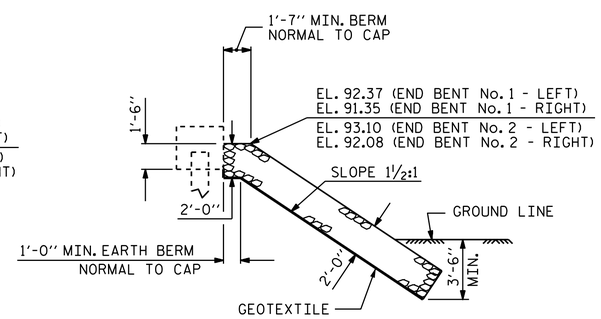

℄ SECTION
BERM RIP RAPPED

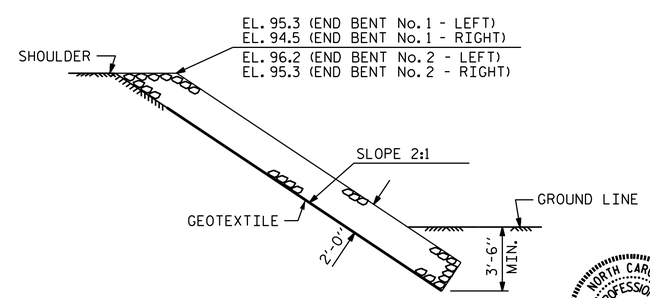

SECTION C-C

PROJECT NO. B-5124
NASH COUNTY
STATION: 54+85.50 -L-

STATE OF NORTH CAROLINA
DEPARTMENT OF TRANSPORTATION
RALEIGH

RIP RAP DETAILS

NORTH CAROLINA PROFESSIONAL SEAL 14045 ENGINEER TIMOTHY L. COGGINS
3/9/2015
DocuSigned by: Tim Coggins
DEFDA8D48FA47B...

ASSEMBLED BY : M.D. PISO	DATE : 01-21-14
CHECKED BY : D.G. ELY	DATE : 04-01-14
DRAWN BY : REK 1/84	REV. 5/1/06R TLA/GM
CHECKED BY : RDU 1/84	REV. 10/1/11 MAA/GM
	REV. 12/21/11 MAA/GM

REVISIONS								SHEET NO.
NO.	BY:	DATE:	NO.	BY:	DATE:			S-70
1			3					TOTAL SHEETS
2			4					71

09-MAR-2015 09:28
R:\Structures\FinalPlans\DocuSign Setup\403_005_B-5124_SMU_S3-0.dgn
nruffin

STR. #3