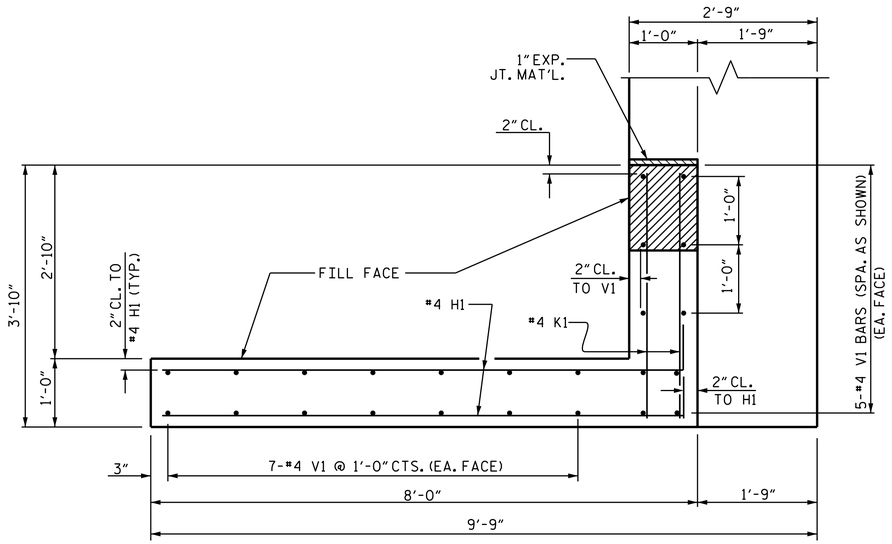

PLAN OF WING (W1)

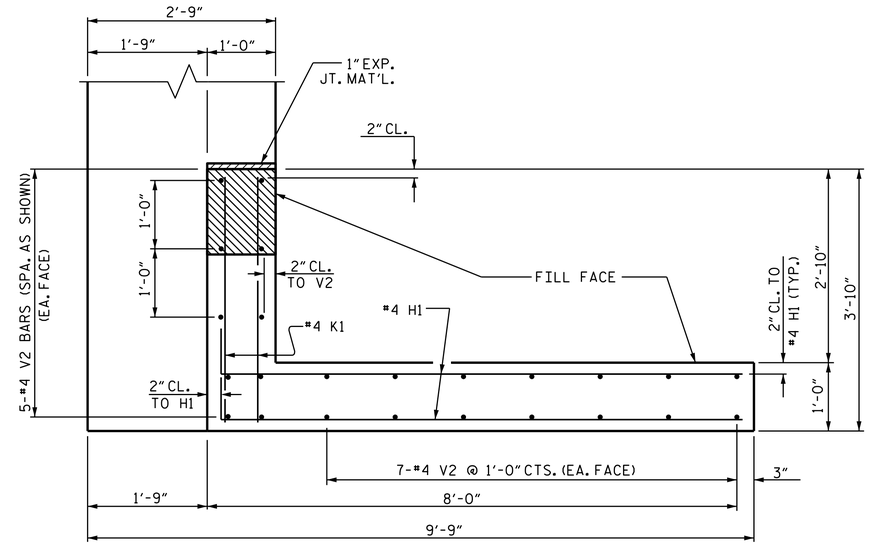

PLAN OF WING (W2)

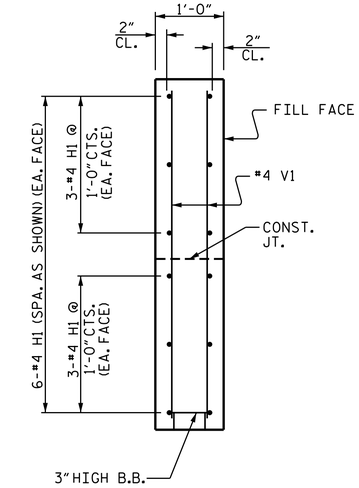

SECTION X-X

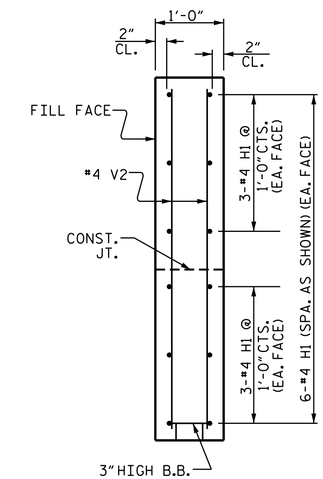

SECTION Y-Y

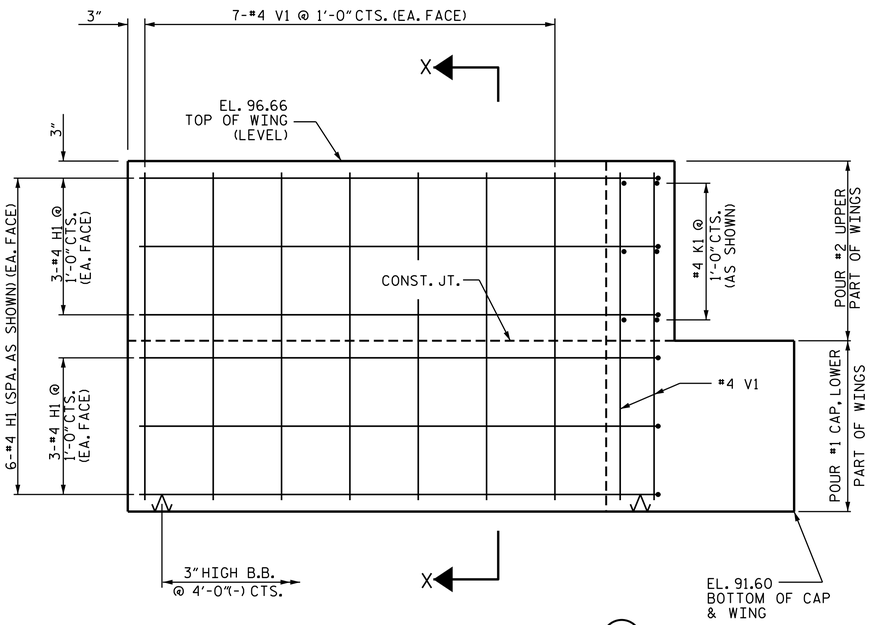

ELEVATION OF WING (W1)

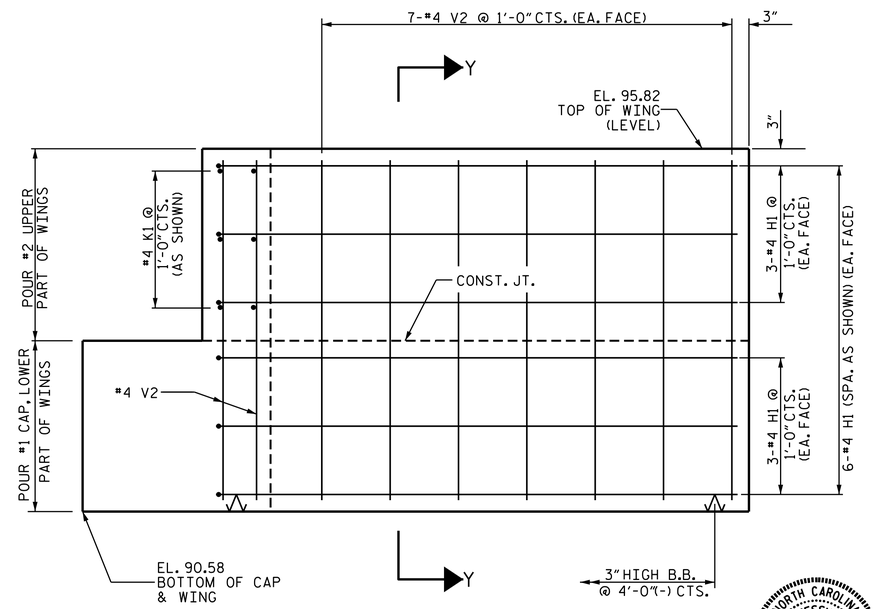

ELEVATION OF WING (W2)

NORTH CAROLINA PROFESSIONAL SEAL 14045 ENGINEER TIMOTHY L. COGGINS
3/9/2015
DocuSigned by: Tim Coggins DEFD4A8D48FA47B...

PROJECT NO. B-5124
NASH COUNTY
STATION: 54+85.50 -L-

SHEET 2 OF 3

STATE OF NORTH CAROLINA
DEPARTMENT OF TRANSPORTATION
RALEIGH

SUBSTRUCTURE

END BENT No. 2

REVISIONS						SHEET NO.
NO.	BY:	DATE:	NO.	BY:	DATE:	S-66
1			3			TOTAL SHEETS
2			4			71

DRAWN BY : M.D. PISO DATE : 01-24-14
CHECKED BY : D. GLADDEN DATE : 12-11-14
DESIGN ENGINEER OF RECORD: T.L. COGGINS, P.E. DATE : 01/13/15

09-MAR-2015 09:28
R:\Structures\FinalPlans\DocuSign Setup\403_005_B-5124_SMU_S3-0.dgn
gruffin

STR. #3