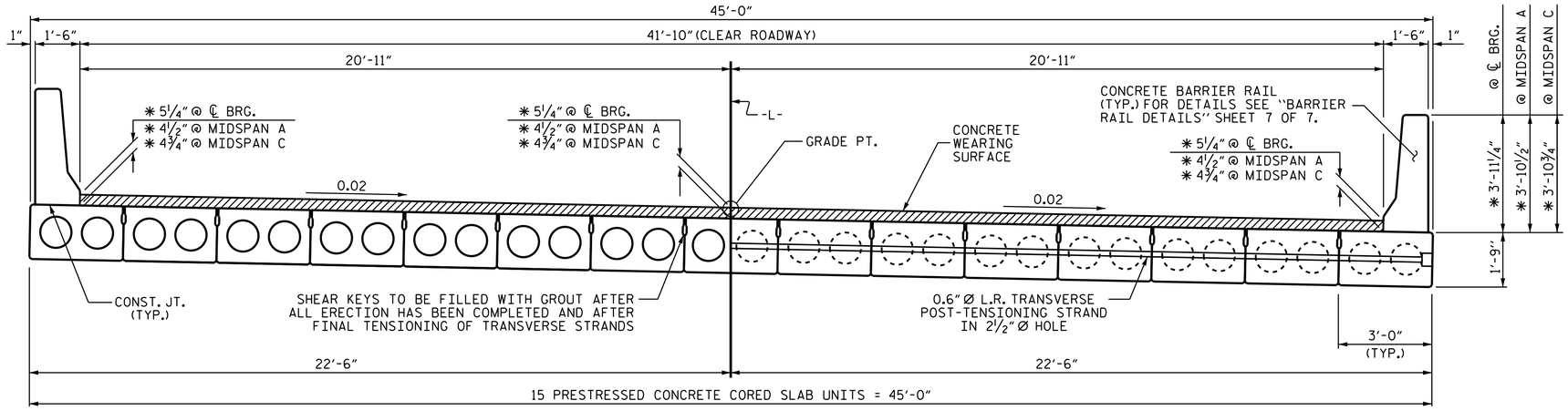

HALF SECTION THROUGH VOIDS

HALF SECTION AT INTERMEDIATE DIAPHRAGMS

TYPICAL SECTION

✱ - THE MINIMUM & MAXIMUM BARRIER RAIL HEIGHTS AND CONCRETE WEARING SURFACE THICKNESSES ARE SHOWN. THE HEIGHT OF THE BARRIER RAIL AND CONCRETE WEARING SURFACE THICKNESSES VARIES WHILE THE TOP OF THE BARRIER RAIL FOLLOWS THE PROFILE OF THE GUTTERLINE.

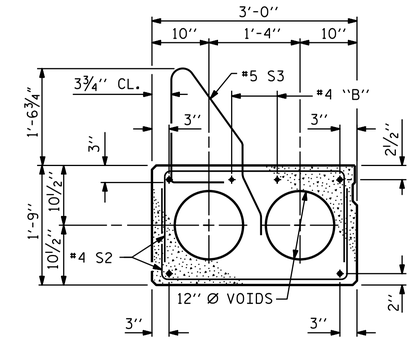

EXTERIOR SLAB SECTION (35' & 40' UNITS)

(FOR PRESTRESSED STRAND LAYOUT, SEE INTERIOR SLAB SECTION.)

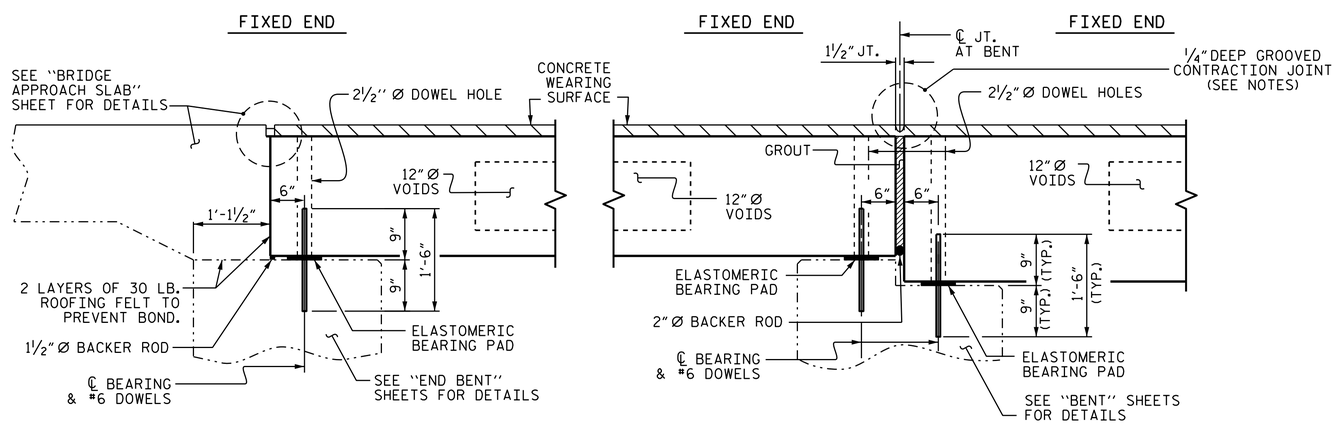

SECTION AT END BENT

SECTION AT BENT No. 1

(BENT No. 2 SIMILAR BY ROTATION)

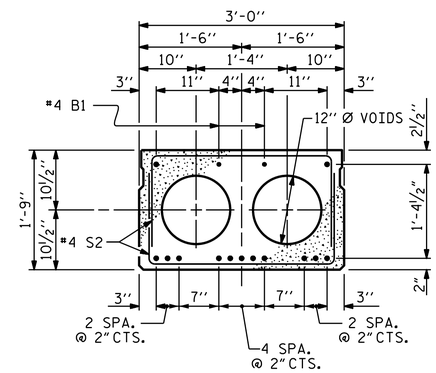

INTERIOR SLAB SECTION 40' UNIT SPAN A

(13 STRANDS REQUIRED)

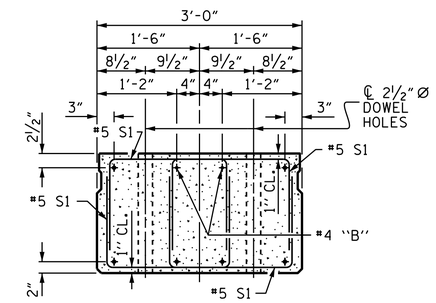

END ELEVATION

SHOWING PLACEMENT OF DOUBLE STIRRUPS AND LOCATION OF DOWEL HOLES. (STRAND LAYOUT NOT SHOWN.) INTERIOR SLAB UNIT SHOWN-EXTERIOR SLAB UNIT SIMILAR EXCEPT SHEAR KEY LOCATION.

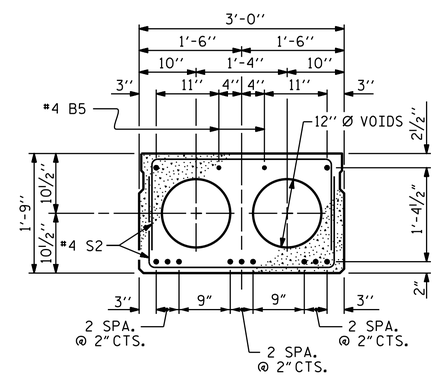

INTERIOR SLAB SECTION 35' UNIT SPAN C

(11 STRANDS REQUIRED)

0.6" Ø LOW RELAXATION STRAND LAYOUT

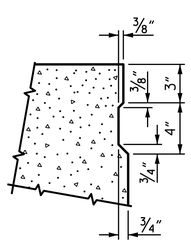

SHEAR KEY DETAIL

NOTE: OMIT SHEAR KEY ON OUTSIDE FACE OF EXTERIOR CORED SLABS.

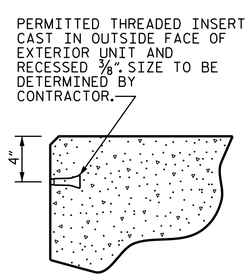

THREADED INSERT DETAIL

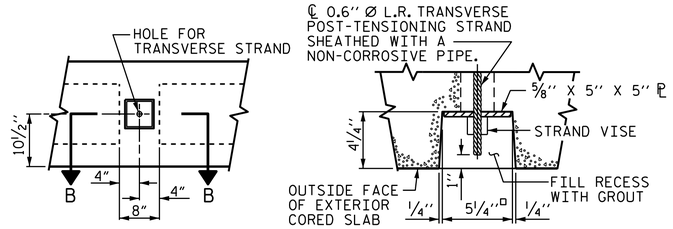

ELEVATION VIEW

SECTION B-B

GROUTED RECESS AT END OF POST-TENSIONED STRAND OF CORED SLABS

PROJECT NO. B-5124

NASH COUNTY

STATION: 54+85.50 -L-

SHEET 1 OF 7

STATE OF NORTH CAROLINA
DEPARTMENT OF TRANSPORTATION
RALEIGH

3'-0" X 1'-9"
PRESTRESSED CONCRETE CORED SLAB UNIT
90° SKEW
(SPANS A & C)

NORTH CAROLINA PROFESSIONAL SEAL 14045 ENGINEER TIMOTHY L. COGGINS
3/9/2015
DocuSigned by: Tim Coggins
DEFD4A8D48FA47B...

ASSEMBLED BY :	M. D. PISO	DATE :	01-10-14
CHECKED BY :	D. G. ELY	DATE :	07-30-14
DESIGN ENGINEER OF RECORD:	K. P. SEDIA	DATE :	11-20-14
DRAWN BY :	DGE 5/09	REV. 12/11	MAA/AAC
CHECKED BY :	BCH 6/09		

REVISIONS								SHEET NO.
NO.	BY:	DATE:	NO.	BY:	DATE:			S-51
1			3					TOTAL SHEETS
2			4					71

STR. #3

09-MAR-2015 09:27
R:\Structures\FinalPlans\DocuSign Setup\403_005_B-5124_SMU_S3-0.dgn
mruffin