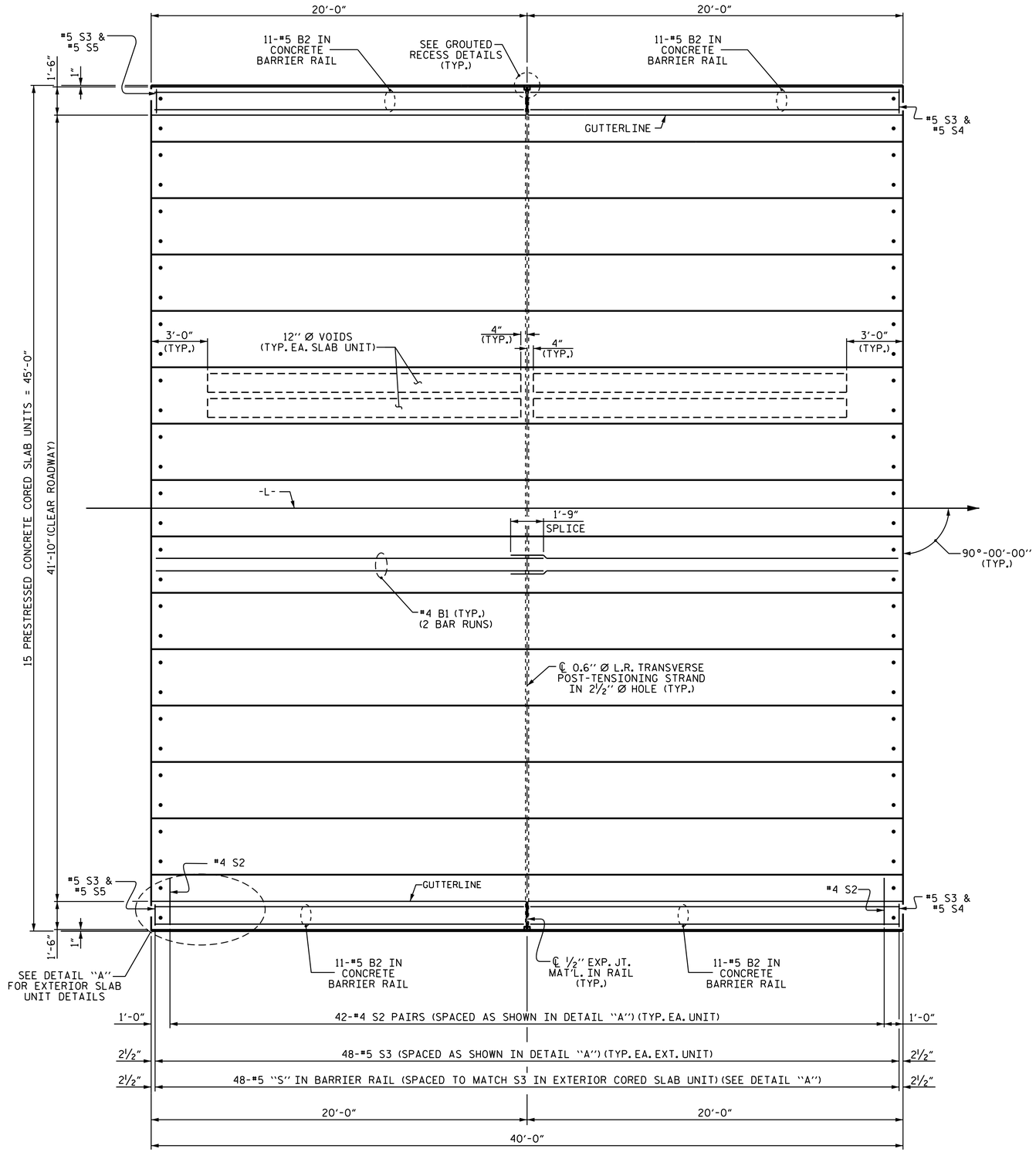

PLAN OF SPAN A

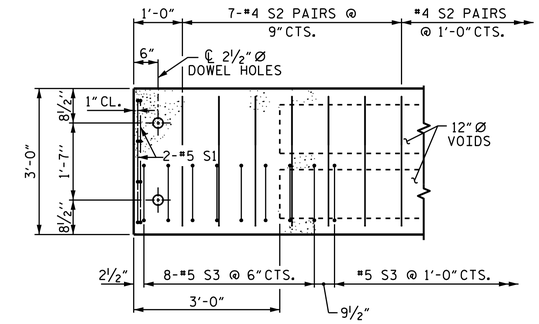

DETAIL "A"

NOTE: EXTERIOR UNIT SHOWN - INTERIOR UNIT SIMILAR EXCEPT OMIT #5 S3 BARS.

AT TAPERED END OF BARRIER RAIL USE #5 S5 BARS SPACED TO MATCH #5 S3. SEE "END OF RAIL DETAILS" SHEET 7 OF 7. FOR NON-TAPERED PORTION USE #5 S4 BARS SPACED TO MATCH #5 S3.

PROJECT NO. B-5124

NASH COUNTY

STATION: 54+85.50 -L-

SHEET 3 OF 7

STATE OF NORTH CAROLINA
DEPARTMENT OF TRANSPORTATION
RALEIGH

SUPERSTRUCTURE

PLAN OF 40' UNIT 41'-10" CLEAR ROADWAY 90° SKEW SPAN A

NORTH CAROLINA PROFESSIONAL SEAL 14045 ENGINEER TIMOTHY L. COGGINS

3/9/2015

DocuSigned by: Tim Coggins
DEFD4A8D4BFA47B...

REVISIONS								SHEET NO.
NO.	BY:	DATE:	NO.	BY:	DATE:			S-53
1			3					TOTAL SHEETS
2			4					71

DRAWN BY :	M. D. PISO	DATE :	01-10-14
CHECKED BY :	D. G. ELY	DATE :	03-26-14
DESIGN ENGINEER OF RECORD:	K. P. SEDAI	DATE :	11-20-14

09-MAR-2015 09:27
R:\Structures\Final Plans\DocuSign Setup\403_005_B-5124_SMU_S3-0.dgn
nruffin

STR. #3