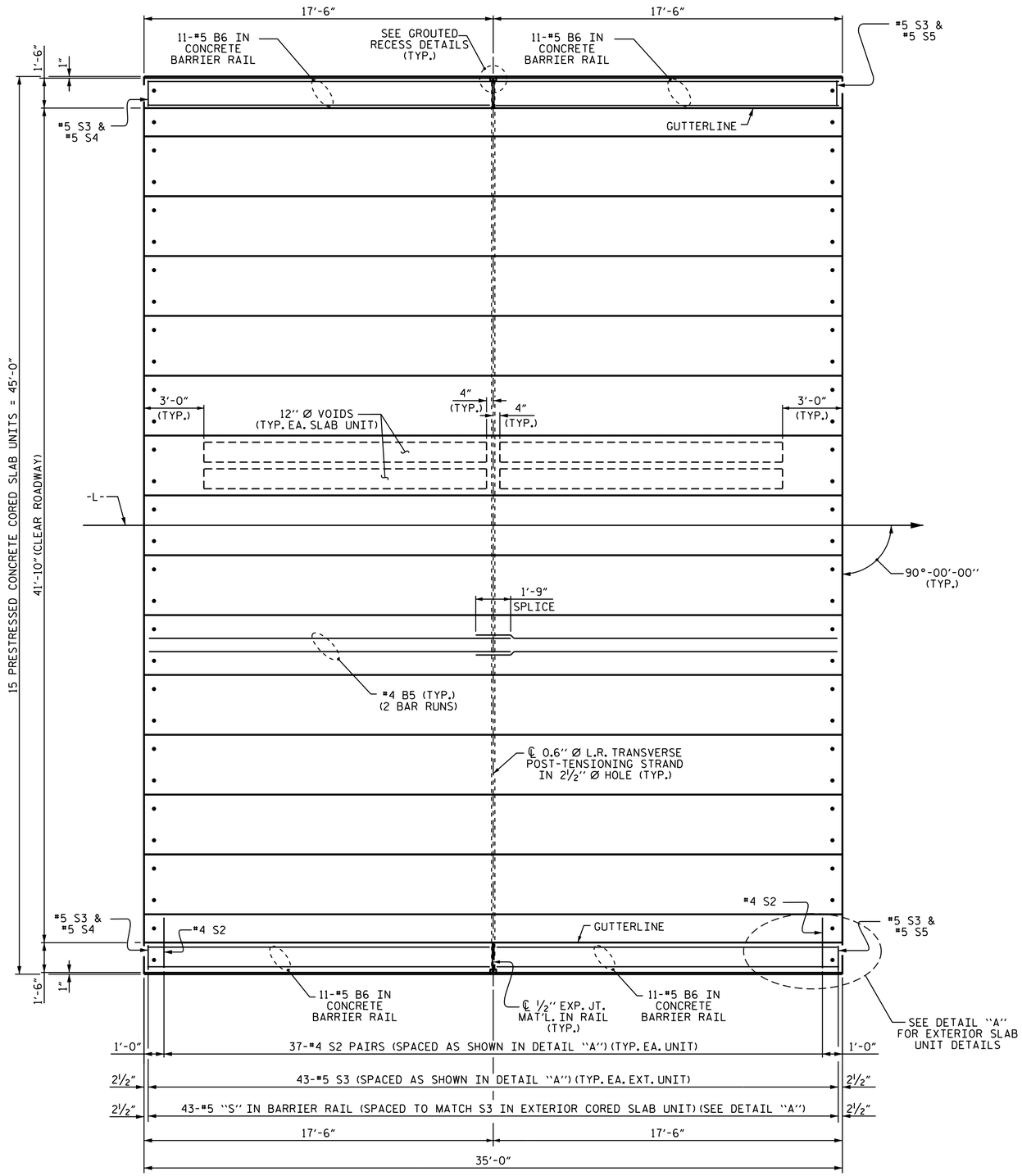

PLAN OF SPAN C

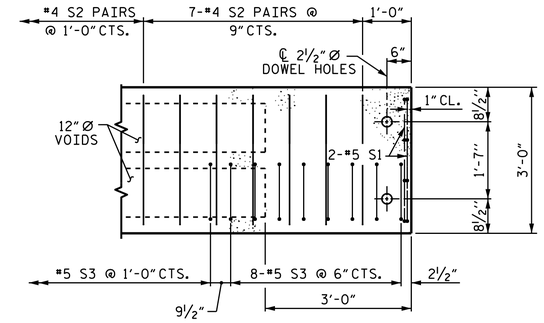

DETAIL "A"

NOTE: EXTERIOR UNIT SHOWN - INTERIOR UNIT SIMILAR EXCEPT OMIT #5 S3 BARS.

AT TAPERED END OF BARRIER RAIL USE #5 S5 BARS SPACED TO MATCH #5 S3, SEE "END OF RAIL DETAILS" SHEET 7 OF 7. FOR NON-TAPERED PORTION USE #5 S4 BARS SPACED TO MATCH #5 S3.

PROJECT NO. B-5124
NASH COUNTY
STATION: 54+85.50 -L-

SHEET 5 OF 7

STATE OF NORTH CAROLINA
DEPARTMENT OF TRANSPORTATION
RALEIGH

SUPERSTRUCTURE

PLAN OF 35' UNIT
41'-10" CLEAR ROADWAY
90° SKEW
SPAN C

NORTH CAROLINA PROFESSIONAL SEAL 14045 ENGINEER TIMOTHY L. COGGINS
3/9/2015
DocuSigned by: Tim Coggins
DEFD4A8D48FA47B...

REVISIONS						SHEET NO.
NO.	BY:	DATE:	NO.	BY:	DATE:	S-55
1			3			TOTAL SHEETS
2			4			71

DRAWN BY : M. D. PISO DATE : 01-10-14
CHECKED BY : D. G. ELY DATE : 03-26-14
DESIGN ENGINEER OF RECORD: K.P.SEDAI DATE : 11-20-14

09-MAR-2015 09:27
R:\Structures\FinalPlans\DocuSign Setup\403_005_B-5124_SMU_S3-0.dgn
nruffin

STR. #3