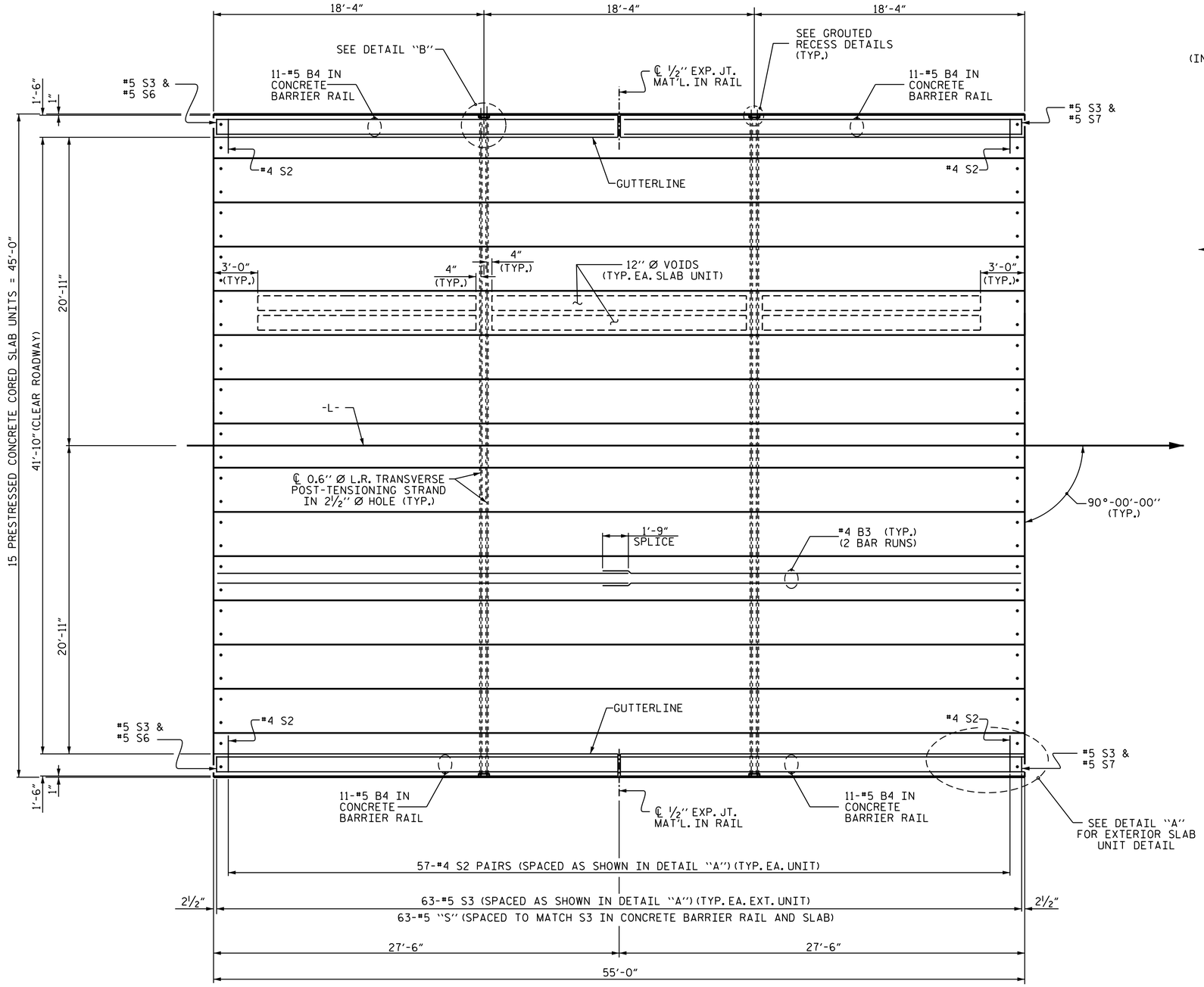

PLAN OF SPAN B

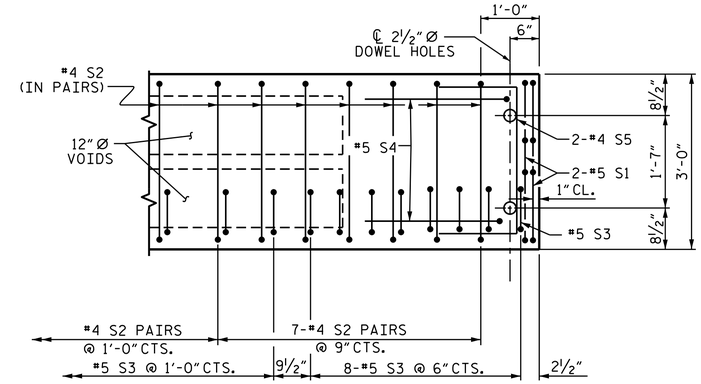

DETAIL "A"

NOTE: EXTERIOR UNIT SHOWN - INTERIOR UNIT SIMILAR EXCEPT OMIT #5 S3 BARS.

AT TAPERED END OF BARRIER RAIL USE #5 S7 BARS SPACED TO MATCH #5 S3. SEE "END OF RAIL DETAILS SHEET 5 OF 5. FOR NON-TAPERED PORTION USE #5 S6 BARS SPACED TO MATCH #5 S3.

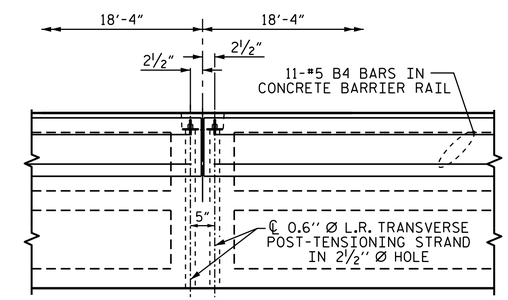

DETAIL "B"

#4 S2 & #5 S3 BARS MAY BE SHIFTED AS NECESSARY TO MAINTAIN 1" CLEAR TO GROUTED RECESS AND 2 1/2" Ø TRANSVERSE POST-TENSIONING STRAND HOLES

PROJECT NO. B-5124

NASH COUNTY

STATION: 22+49.00 -L-

SHEET 3 OF 5

STATE OF NORTH CAROLINA
DEPARTMENT OF TRANSPORTATION
RALEIGH

SUPERSTRUCTURE

PLAN OF 55' UNIT 41'-10" CLEAR ROADWAY 90° SKEW SPAN B

NORTH CAROLINA PROFESSIONAL SEAL 14045 ENGINEER TIMOTHY L. COGGINS
3/9/2015
DocuSigned by: Tim Coggins
DEFD4A8D48FA47B...

REVISIONS								SHEET NO.
NO.	BY:	DATE:		NO.	BY:	DATE:		S-7
1				3				TOTAL SHEETS
2				4				71

ASSEMBLED BY :	M.D.PISO		DATE : 02-04-14
CHECKED BY :	D. G. ELY		DATE : 04-03-14
DESIGN ENGINEER OF RECORD:	K. P. SEDAI		DATE : 11-17-14
DRAWN BY : MAA 6/10	REV. 12/5/11	MAA/AAC	
CHECKED BY : MKT 7/10	REV. 8/14	MAA/TMG	

06-MAR-2015 14:47
R:\Structures\FinalPlans\DocuSign Setup\401_005_B-5124_SMU_S1-0.dgn
nruffin

STR. #1