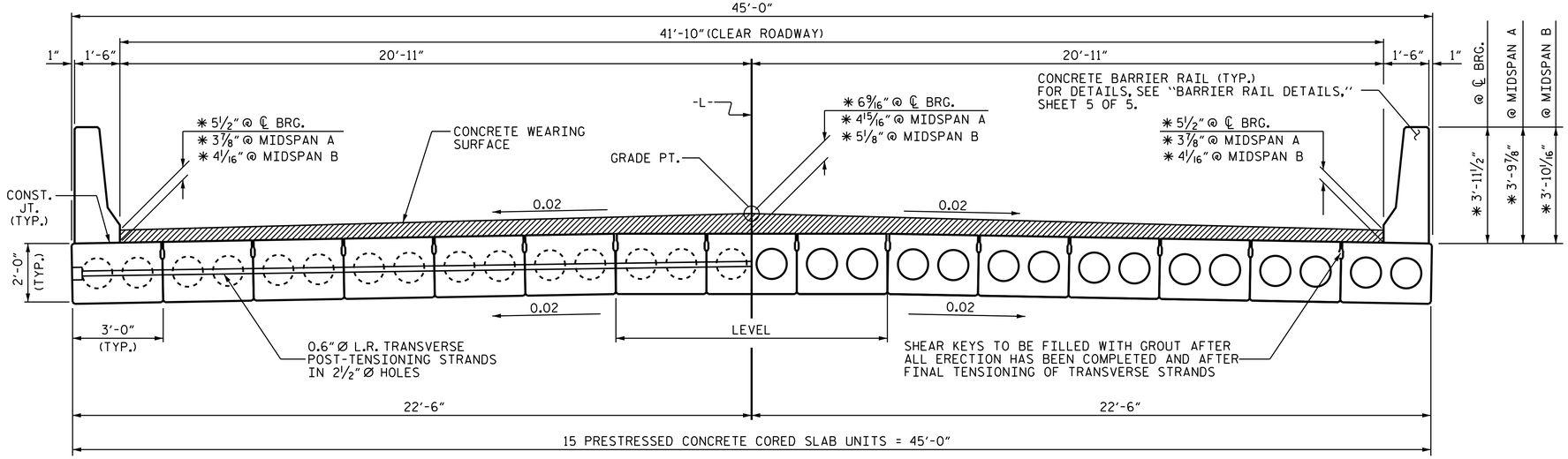

HALF SECTION
AT INTERMEDIATE DIAPHRAGMS

HALF SECTION
THROUGH VOIDS

TYPICAL SECTION

✱ THE MINIMUM AND MAXIMUM BARRIER RAIL HEIGHTS AND CONCRETE WEARING SURFACE THICKNESS ARE SHOWN. THE HEIGHT OF THE BARRIER RAIL AND CONCRETE WEARING SURFACE THICKNESS VARIES WHILE THE TOP OF THE BARRIER RAIL FOLLOWS THE PROFILE OF THE GUTTERLINE.

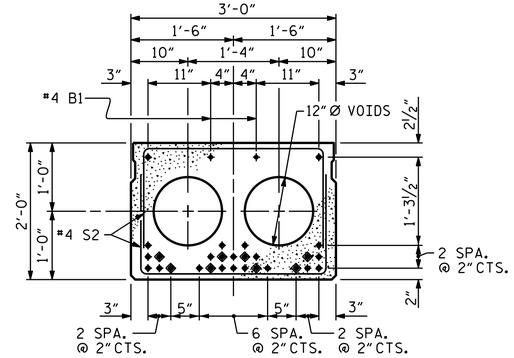

INTERIOR SLAB SECTION
70' UNIT
SPAN A
(28 STRANDS REQUIRED)

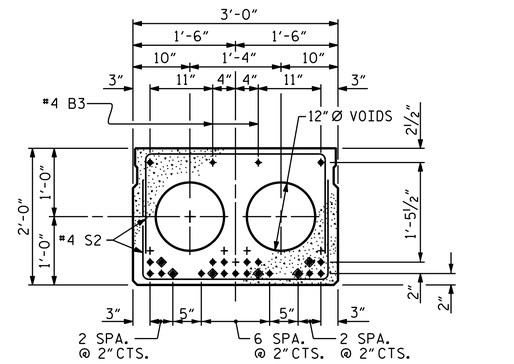

INTERIOR SLAB SECTION
55' UNIT
SPAN B
(23 STRANDS REQUIRED)

0.6" Ø LOW RELAXATION STRAND LAYOUT

◈ BOND SHALL BE BROKEN ON THESE STRANDS FOR A DISTANCE OF 12'-0" FROM END OF CORED SLAB UNIT. SEE STANDARD SPECIFICATIONS, ARTICLE 1078-7.

DEBONDING LEGEND

FIXED END

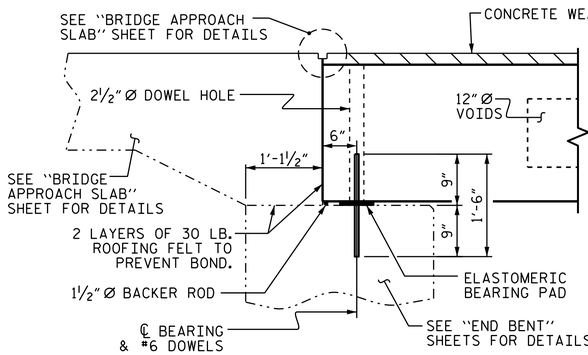

SECTION AT END BENT

FIXED END FIXED END

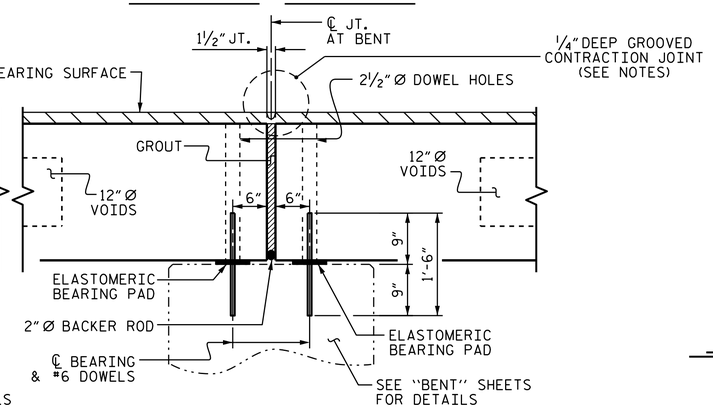

SECTION AT BENT

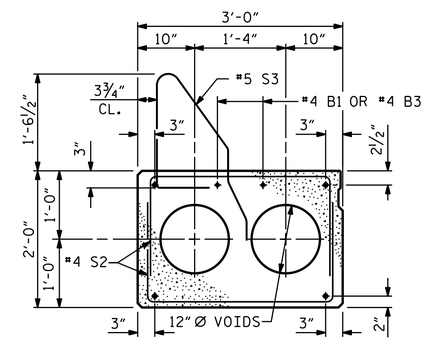

EXTERIOR SLAB SECTION

(FOR PRESTRESSED STRAND LAYOUT, SEE INTERIOR SLAB SECTION.)

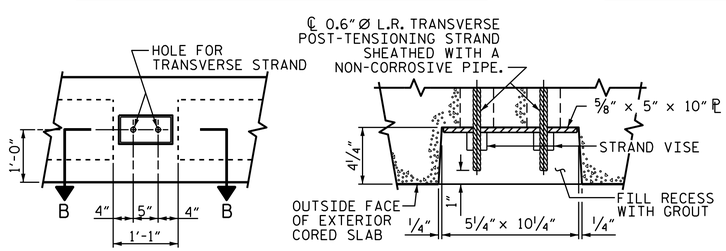

ELEVATION VIEW

SECTION B-B

GROUTED RECESS AT END OF POST-TENSIONED STRAND-CORED SLABS

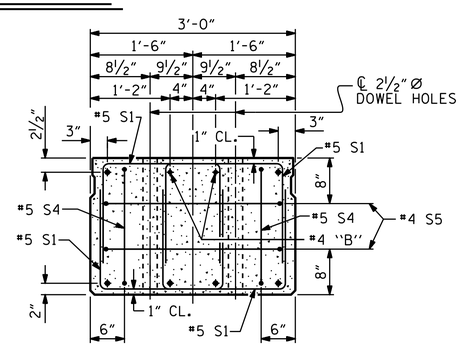

END ELEVATION

SHOWING PLACEMENT OF DOUBLE STIRRUPS AND LOCATION OF DOWEL HOLES. (STRAND LAYOUT NOT SHOWN.) INTERIOR SLAB UNIT SHOWN-EXTERIOR SLAB UNIT SIMILAR EXCEPT SHEAR KEY LOCATION.

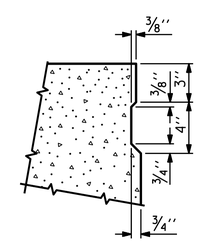

SHEAR KEY DETAIL

NOTE: OMIT SHEAR KEY ON OUTSIDE FACE OF EXTERIOR CORED SLABS.

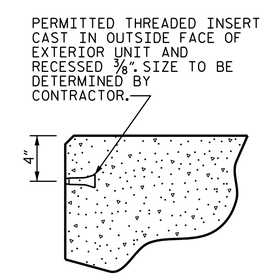

THREADED INSERT DETAIL

PROJECT NO. B-5124
NASH COUNTY
STATION: 22+49.00 -L-

SHEET 1 OF 5

STATE OF NORTH CAROLINA
DEPARTMENT OF TRANSPORTATION
RALEIGH

SUPERSTRUCTURE

3'-0" X 2'-0"
PRESTRESSED CONCRETE
CORED SLAB UNIT
90° SKEW

NORTH CAROLINA PROFESSIONAL SEAL 14045 ENGINEER TIMOTHY L. COGGINS
3/9/2015
DocuSigned by: Tim Coggins
DEFD4A8D48FA47B...

ASSEMBLED BY :	M.D.PISO	DATE :	02-04-14
CHECKED BY :	D. G. ELY	DATE :	04-03-14
DESIGN ENGINEER OF RECORD:	K. P. SEDAI	DATE :	11-17-14
DRAWN BY : MAA 6/10	REV. 12/11	MAA/AAC	
CHECKED BY : MKT 7/10	REV. 8/14	MAA/TMG	

REVISIONS

NO.	BY:	DATE:	NO.	BY:	DATE:
1			3		
2			4		

SHEET NO. S-5
TOTAL SHEETS 71

06-MAR-2015 14:47
R:\Structures\Final Plans\DocuSign Setup\401_005_B-5124_SMU_S1-0.dgn
mruffin

STR. #1