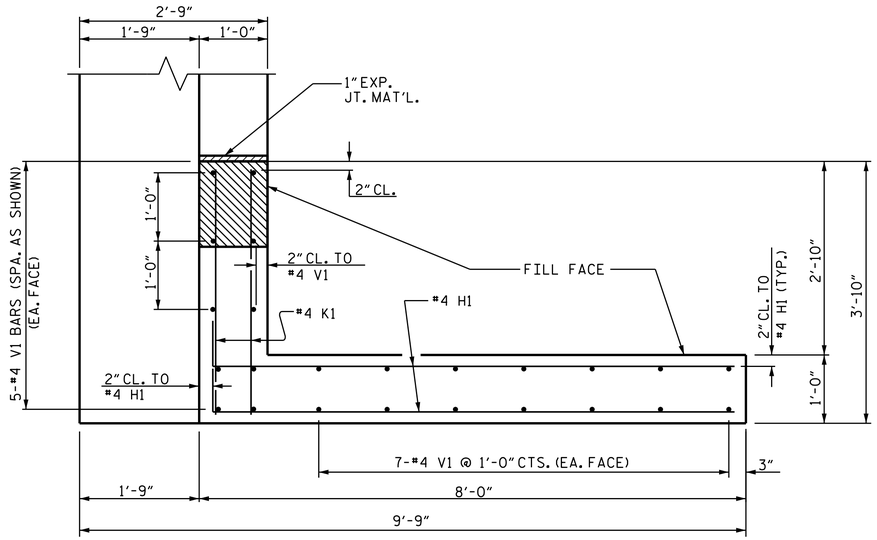

PLAN OF WING (W1)

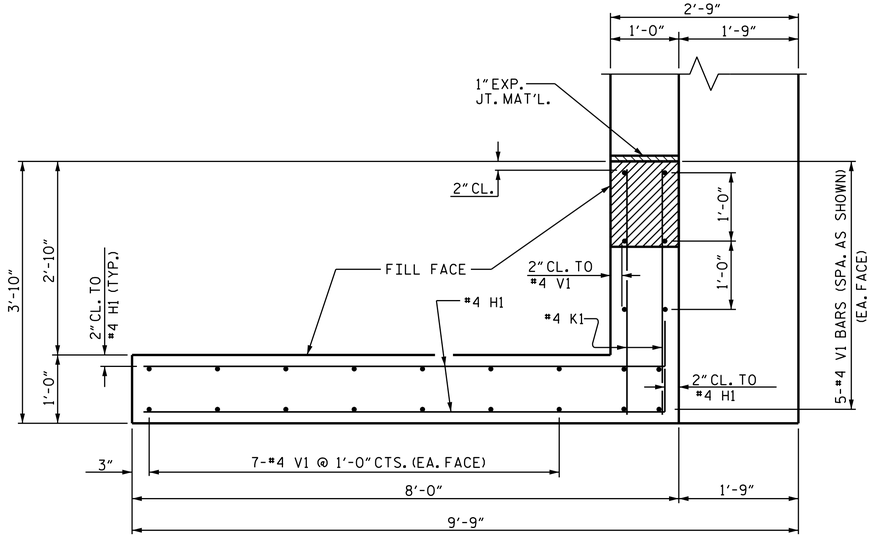

PLAN OF WING (W2)

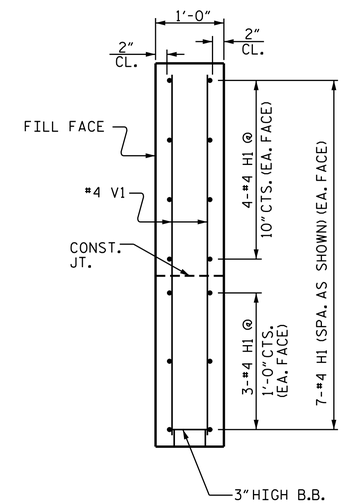

SECTION X-X

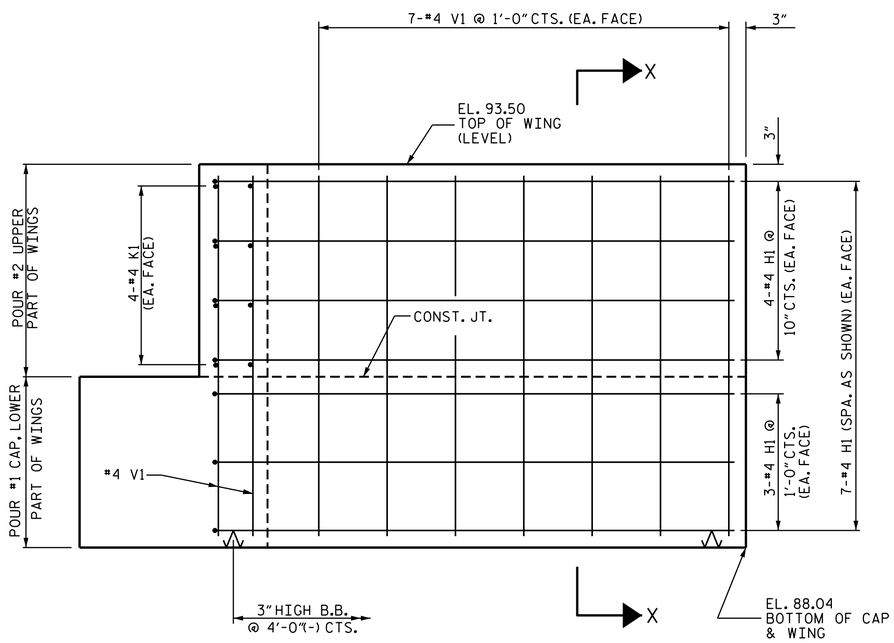

ELEVATION OF WING (W1)

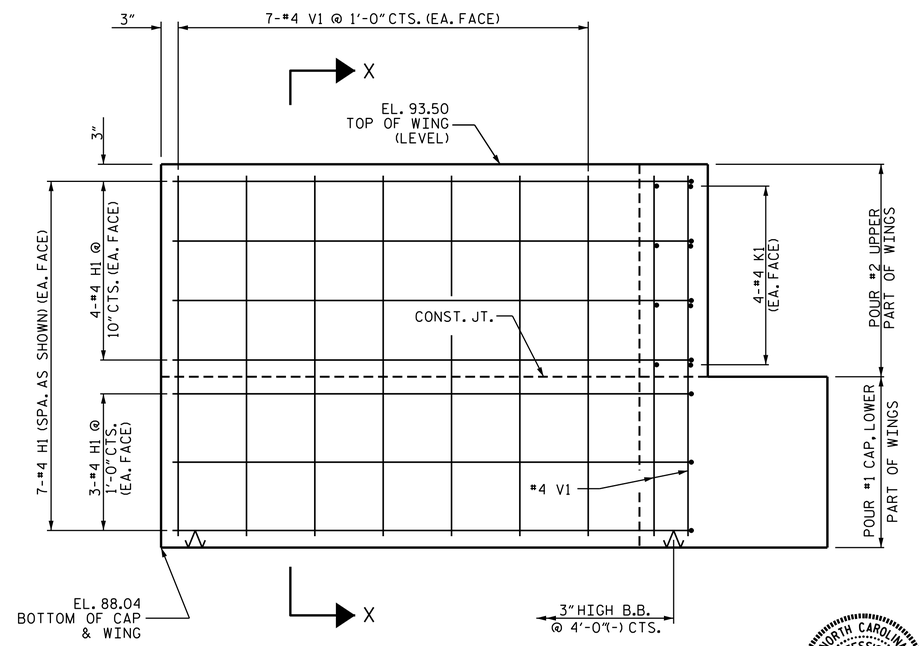

ELEVATION OF WING (W2)

NORTH CAROLINA PROFESSIONAL SEAL 14045 ENGINEER TIMOTHY L. COGGINS
3/9/2015

DocuSigned by: Tim Coggins
DEFD4A8D48FA47B...

PROJECT NO. B-5124
NASH COUNTY
STATION: 22+49.00 -L-

SHEET 2 OF 3

STATE OF NORTH CAROLINA
DEPARTMENT OF TRANSPORTATION
RALEIGH

SUBSTRUCTURE

END BENT No. 1

REVISIONS						SHEET NO.
NO.	BY:	DATE:	NO.	BY:	DATE:	S-12
1			3			TOTAL SHEETS
2			4			71

STR. #1

DRAWN BY : M.D.PISO DATE : 06-06-14
CHECKED BY : T.L. COGGINS, P.E. DATE : 09-29-14
DESIGN ENGINEER OF RECORD: K.D.SEDAI,P.E. DATE : 06-04-14

06-MAR-2015 14:48
R:\Structures\FinalPlans\DocuSign Setup\401_005_B-5124_SMU_S1-0.dgn
nruffin