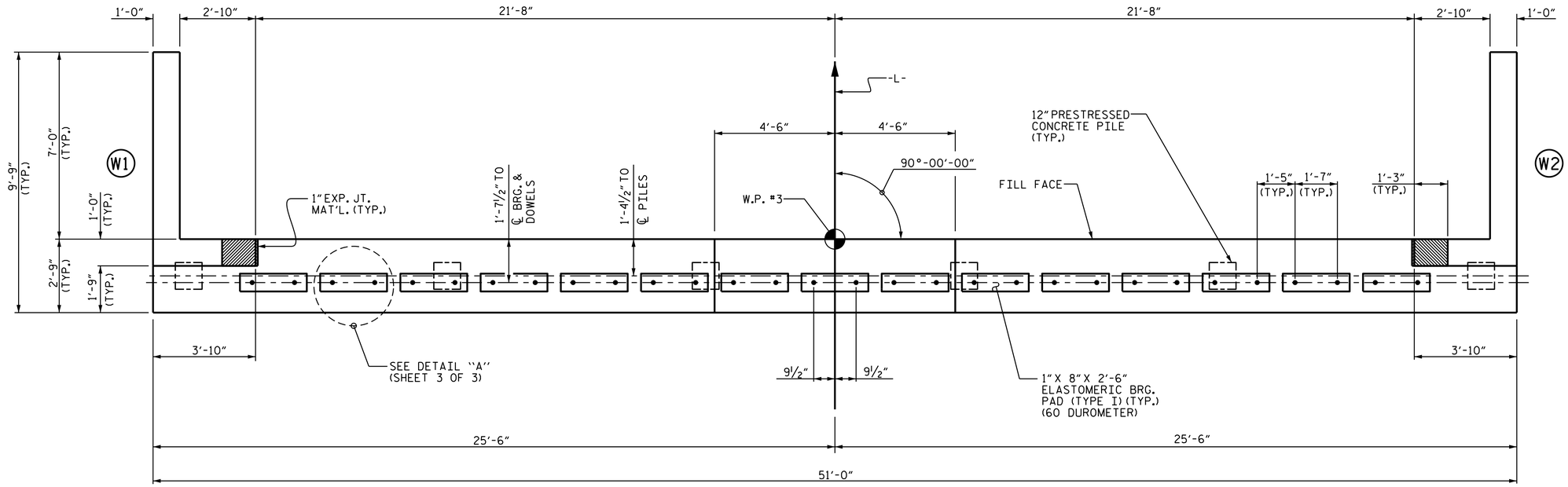

PLAN

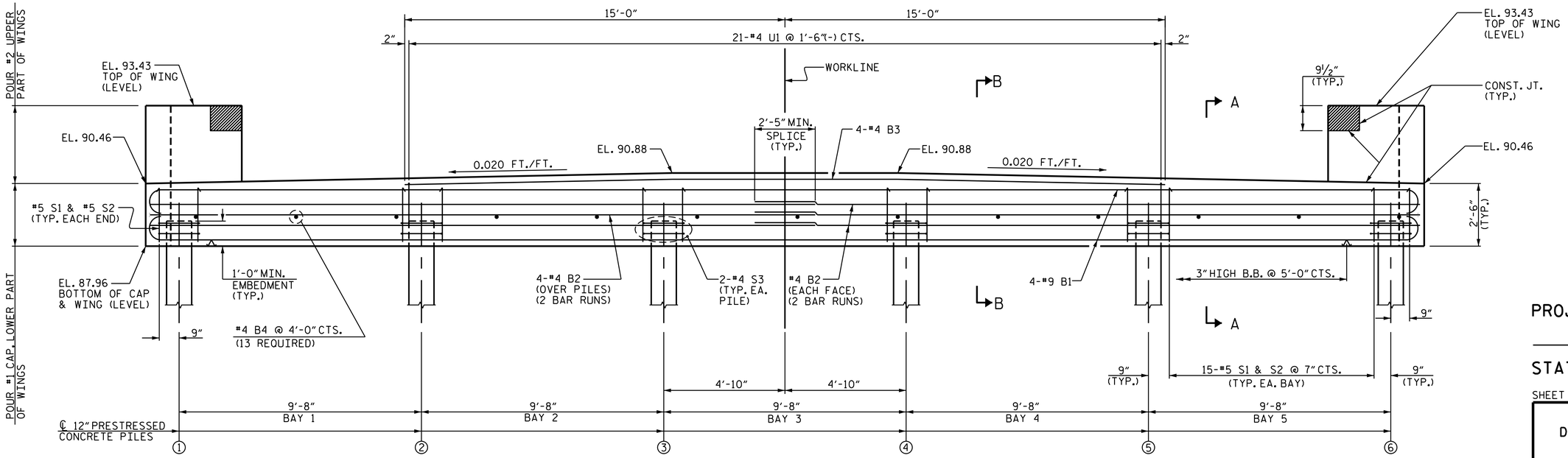

ELEVATION

NOTES

STIRRUPS IN CAP MAY BE SHIFTED AS NECESSARY TO CLEAR DOWELS.

THE CONCRETE IN THE SHADED AREA OF THE WING SHALL BE POURED AFTER THE "F" SHAPE CONCRETE BARRIER RAIL IS CAST IF SLIP FORMING IS USED.

PROJECT NO. B-5124

NASH COUNTY

STATION: 22+49.00 -L-

SHEET 1 OF 3

STATE OF NORTH CAROLINA
DEPARTMENT OF TRANSPORTATION
RALEIGH

SUBSTRUCTURE

END BENT No. 2

NORTH CAROLINA PROFESSIONAL SEAL 14045 ENGINEER TIMOTHY L. COGGINS
3/9/2015

DocuSigned by: Tim Coggins
DEFD4A8D48FA47B...

REVISIONS								SHEET NO.
NO.	BY:	DATE:	NO.	BY:	DATE:			S-16
1			3					TOTAL SHEETS
2			4					71

STR.#1

DRAWN BY :	M.D.PISO	DATE :	06-06-14
CHECKED BY :	T.L. COGGINS, P.E.	DATE :	09-29-14
DESIGN ENGINEER OF RECORD:	K.D.SEDAI,P.E.	DATE :	06-04-14

06-MAR-2015 14:48
R:\Structures\FinalPlans\DocuSign Setup\401_005_B-5124_SMU_S1-0.dgn
nruffin