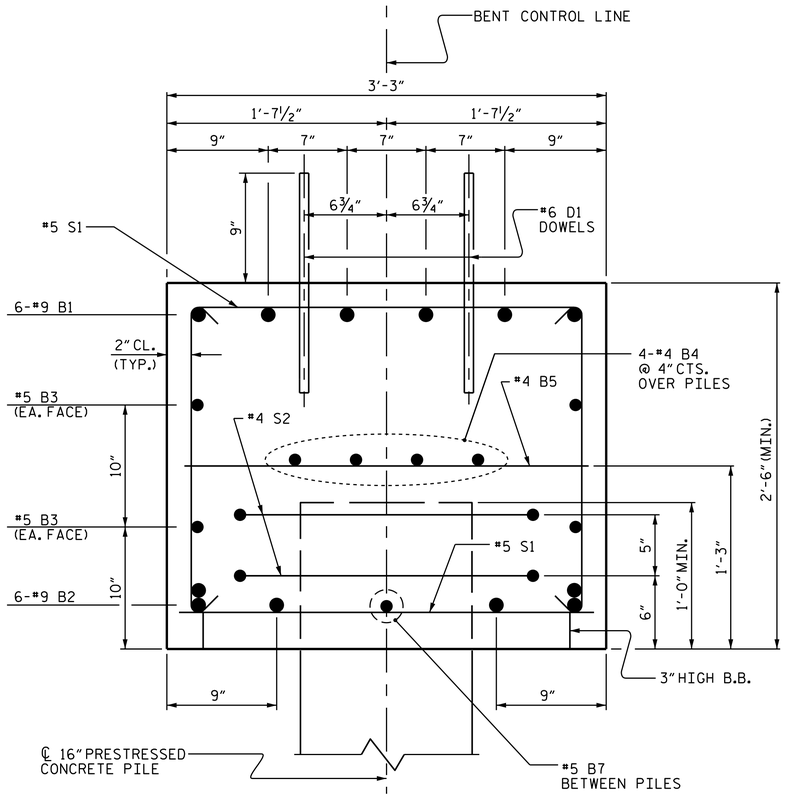

SECTION A-A

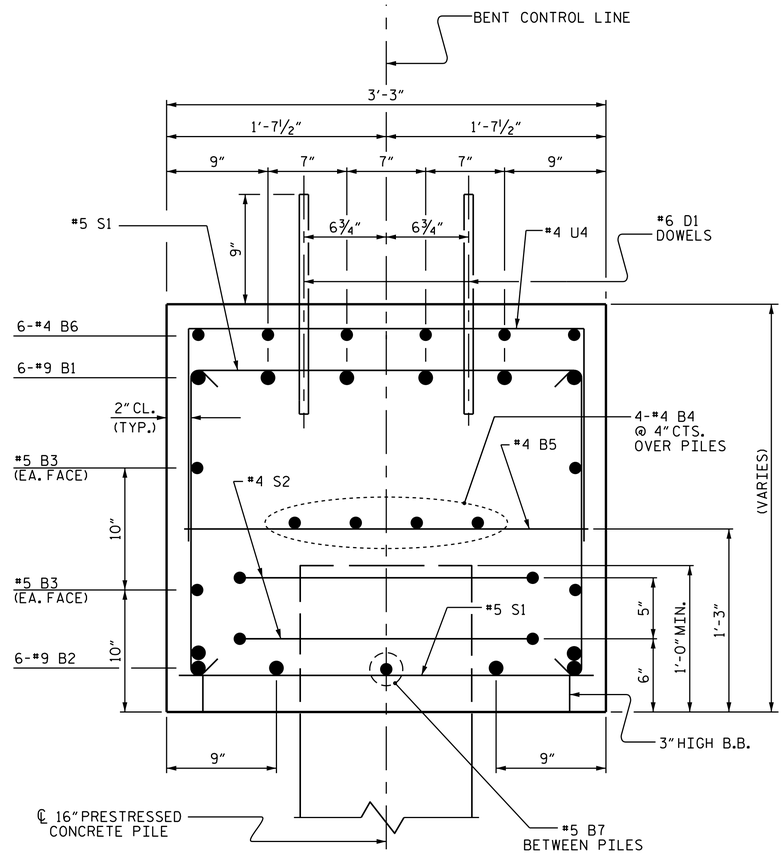

SECTION B-B

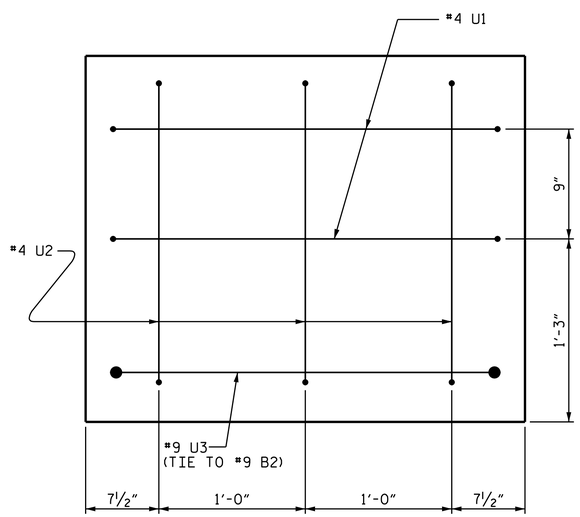

END OF CAP VIEW

(TYPICAL BOTH ENDS)

BAR TYPES

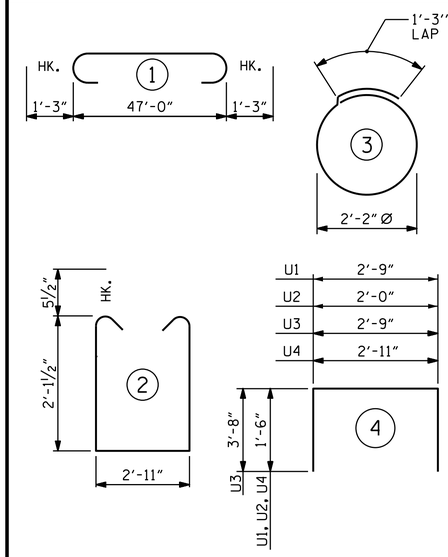

ALL BAR DIMENSIONS ARE OUT TO OUT.

BILL OF MATERIAL FOR BENT No. 1

BAR	NO.	SIZE	TYPE	LENGTH	WEIGHT
B1	6	#9	1	49'-6"	1010
B2	6	#9	STR	47'-2"	962
B3	4	#5	STR	47'-2"	197
B4	8	#4	STR	24'-10"	133
B5	12	#4	STR	2'-11"	23
B6	6	#4	STR	27'-4"	110
B7	6	#5	STR	5'-6"	34
D1	60	#6	STR	1'-6"	135
S1	52	#5	2	8'-1"	438
S2	14	#4	3	8'-2"	76
U1	4	#4	4	5'-9"	15
U2	6	#4	4	5'-0"	20
U3	2	#9	4	10'-1"	69
U4	19	#4	4	5'-11"	75

REINFORCING STEEL 3,297 LBS.

CLASS A CONCRETE BREAKDOWN
POUR #1 (CAP) ▲14.9 CU.YDS.
TOTAL CLASS A CONCRETE 14.9 CU.YDS.

16" PRESTRESSED CONCRETE PILES
No. 7 LIN. FT. 315

PILE REDRIVES EA. 4

▲ CONCRETE DISPLACED BY THE 16" PRESTRESSED CONCRETE PILES HAS BEEN DEDUCTED FROM THE CLASS A CONCRETE QUANTITY.

PROJECT NO. B-5124
NASH COUNTY
STATION: 22+49.00 -L-

SHEET 2 OF 2

STATE OF NORTH CAROLINA
DEPARTMENT OF TRANSPORTATION
RALEIGH

SUBSTRUCTURE

BENT No. 1

NORTH CAROLINA PROFESSIONAL SEAL 14045 ENGINEER TIMOTHY L. COGGINS
3/9/2015
DocuSigned by: Tim Coggins DEFD4ABD48FA47B...

REVISIONS						
NO.	BY:	DATE:	NO.	BY:	DATE:	
1			3			
2			4			

SHEET NO. S-15
TOTAL SHEETS 71

DRAWN BY : M.D.PISO DATE : 06-04-14
CHECKED BY : T.L. COGGINS, P.E. DATE : 09-29-14

DRAWN BY : DGE 05/10
CHECKED BY : MKT 05/10

06-MAR-2015 14:48
R:\Structures\FinalPlans\DocuSign Setup\401_005_B-5124_SMU_S1-0.dgn
gruffin

STR. #1