| TIP NO. | SHEET NO. |
|---|---|
| B-5124 | SIGN-3 |

APPROVED: DocuSigned by: Ayman Alqudwah F32AC5CAF960472...

DATE: 1/5/2015

SEAL

NORTH CAROLINA PROFESSIONAL SEAL 028387 ENGINEER AYMAN I. ALQUDWAH

N
NC GRID
NAD 83/NSRS 2007

10 15 20 25

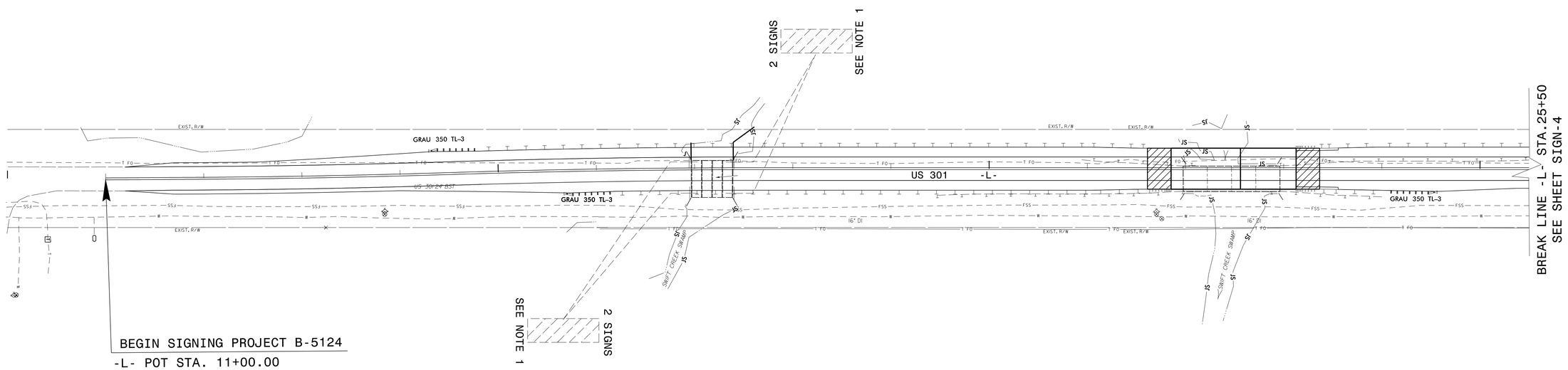


***EXISTING SIGNS***
***US HWY 301***
***–L– 11+00 TO STA. 25+50***

1/5/2015
P:\TIPProjects-B\B5124\Traffic\Signing\CADD\Signing Layout Plans\b5124_sgn_psh_s03.dgn
User:richard