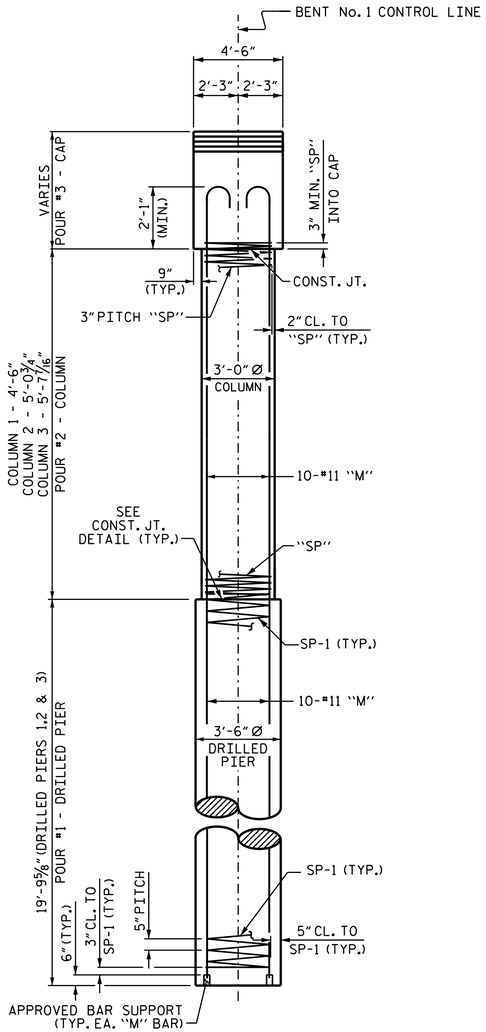

END ELEVATION

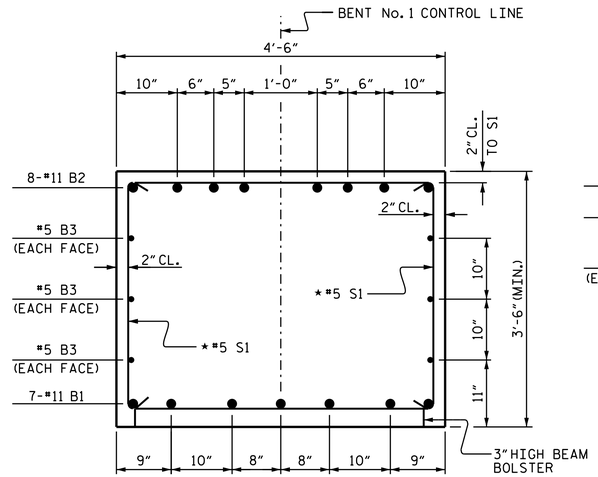

SECTION A-A

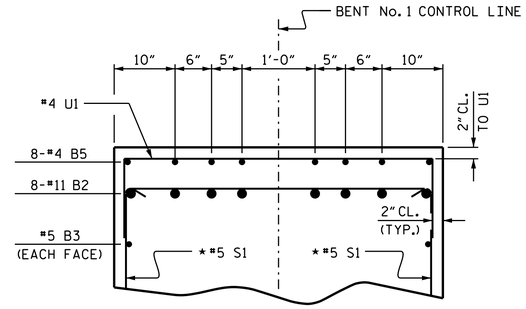

PARTIAL SECTION B-B

★ INVERT ALTERNATE STIRRUPS

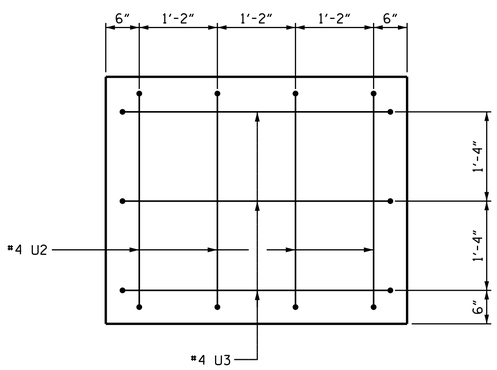

VIEW X-X

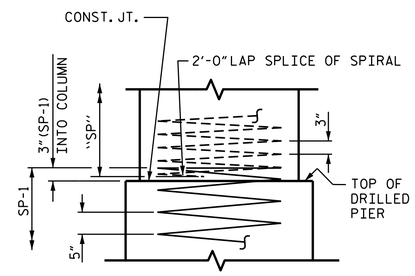

CONSTRUCTION JOINT DETAIL

BAR TYPES

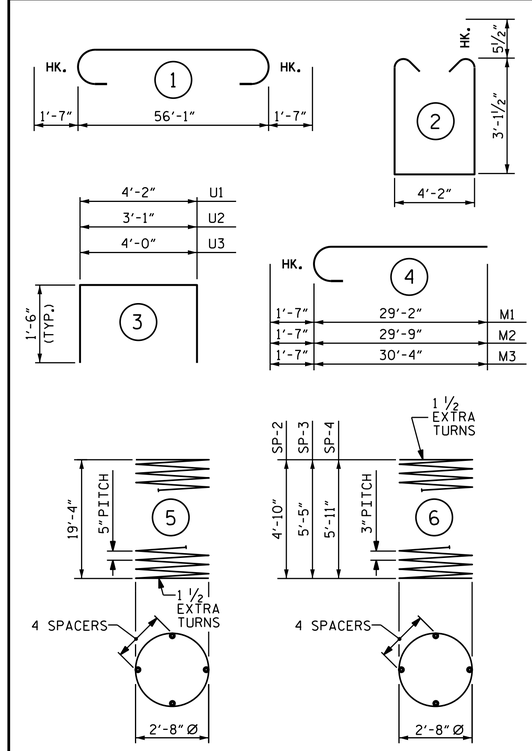

ALL BAR DIMENSIONS ARE OUT TO OUT.

BILL OF MATERIAL

BENT No. 1

BAR	NO.	SIZE	TYPE	LENGTH	WEIGHT
B1	7	#11	STR	56'-3"	2,092
B2	8	#11	1	59'-3"	2,518
B3	6	#5	STR	56'-3"	352
B4	8	#4	STR	6'-8"	36
B5	8	#4	STR	6'-0"	32
B6	24	#4	STR	5'-0"	80
M1	10	#11	4	30'-9"	1,634
M2	10	#11	4	31'-4"	1,665
M3	10	#11	4	31'-11"	1,696
S1	66	#5	2	11'-4"	780
U1	48	#4	3	7'-2"	230
U2	8	#4	3	6'-1"	33
U3	6	#4	3	7'-0"	28
REINFORCING STEEL FOR BENT No. 1					11,176 LBS.
SP-1	3	*	5	394'-10"	1,235
SP-2	1	**	6	173'-4"	116
SP-3	1	**	6	198'-1"	132
SP-4	1	**	6	214'-7"	143
SPIRAL COLUMN REINFORCING STEEL					1,626 LBS.

CLASS A CONCRETE BREAKDOWN

POUR #2 (COLUMNS)	4.0 C.Y.
POUR #3 (CAP)	34.9 C.Y.
TOTAL CLASS A CONCRETE	38.9 C.Y.

DRILLED PIERS QUANTITIES:

DRILLED PIER CONCRETE

POUR #1 (DRILLED PIERS)	21.2 C.Y.
3'-6" Ø DRILLED PIERS IN SOIL	24.40 LIN. FT.
3'-6" Ø DRILLED PIERS NOT IN SOIL	35.00 LIN. FT.
PERMANENT STEEL CASING FOR 3'-6" Ø DRILLED PIERS	26.40 LIN. FT.
CSL TUBES	256 LIN. FT.

* THE SP-1 SPIRAL REINFORCING STEEL SHALL BE W31 OR D-31 COLD DRAWN WIRE OR #5 PLAIN OR DEFORMED BAR.

** THE SP-2 THRU SP-4 SPIRAL REINFORCING STEEL SHALL BE W20 OR D-20 COLD DRAWN WIRE OR #4 PLAIN OR DEFORMED BAR.

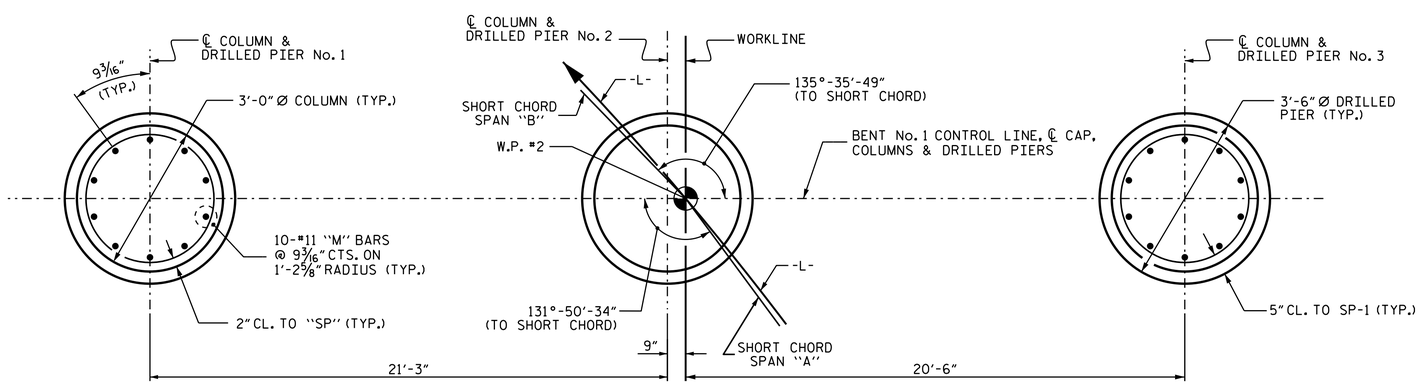

PLAN OF DRILLED PIERS & COLUMNS

(REINFORCEMENT STEEL IS TYPICAL FOR EACH COLUMN & DRILLED PIER)

PROJECT NO. B-3673

MCDOWELL COUNTY

STATION: 29+38.00 -L-

SHEET 2 OF 2

STATE OF NORTH CAROLINA
DEPARTMENT OF TRANSPORTATION
RALEIGH

SUBSTRUCTURE

BENT No. 1

NORTH CAROLINA PROFESSIONAL SEAL 17230 ENGINEER WAEL S. ARAFAT

DocuSigned by: Wael Arafat 4139C12A32AB406... 2/24/2015

REVISIONS								SHEET NO.
NO.	BY:	DATE:	NO.	BY:	DATE:			S-32
1			3					TOTAL SHEETS
2			4					43

DRAWN BY : R. P. PATEL DATE : 3-20-14

CHECKED BY : B. N. BARODAWALA DATE : 1-6-15

DESIGN ENGINEER OF RECORD: J. P. MCCARTHA DATE : 1-21-15

24-FEB-2015 09:05
R:\Structures\Plans\FinalPlans\B-3673_SD_B*1.dgn
warafat