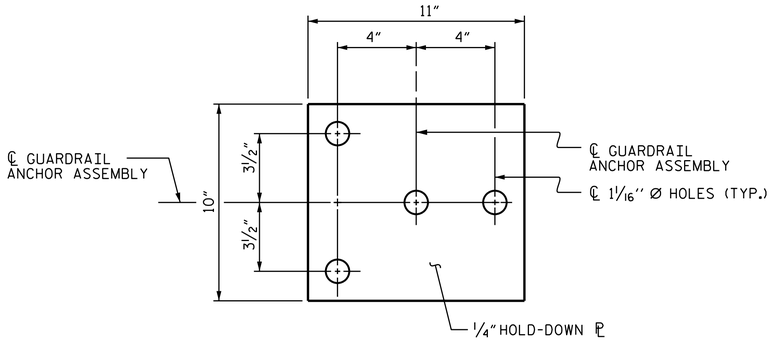

PLAN

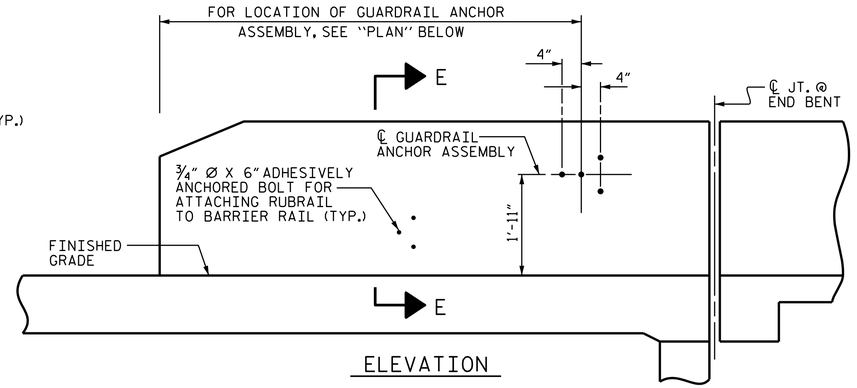

ELEVATION

NOTES

THE GUARDRAIL ANCHOR ASSEMBLY SHALL CONSIST OF A 1/4" HOLD-DOWN PLATE AND 4 - 7/8" Ø BOLTS WITH NUTS AND WASHERS, RUBRAIL, AND ADHESIVELY ANCHORED BOLTS.

THE HOLD-DOWN PLATE SHALL CONFORM TO AASHTO M270 GRADE 36. AFTER FABRICATION, THE HOLD-DOWN PLATE SHALL BE HOT-DIP GALVANIZED IN ACCORDANCE WITH AASHTO M111.

BOLTS SHALL CONFORM TO THE REQUIREMENTS OF ASTM A307 AND NUTS SHALL CONFORM TO THE REQUIREMENTS OF AASHTO M291. BOLTS, NUTS AND WASHERS SHALL BE GALVANIZED. (AT THE CONTRACTOR'S OPTION, STAINLESS STEEL BOLTS, NUTS AND WASHERS MAY BE USED AS AN ALTERNATE FOR THE 7/8" Ø GALVANIZED BOLTS, NUTS AND WASHERS. THEY SHALL CONFORM TO OR EXCEED THE MECHANICAL REQUIREMENTS OF ASTM A307. THE USE OF THIS ALTERNATE SHALL BE APPROVED BY THE ENGINEER.)

THE GUARDRAIL ANCHOR ASSEMBLY IS REQUIRED AT ALL POINTS WHERE APPROACH GUARDRAIL IS TO BE ATTACHED TO THE END OF BARRIER RAIL. FOR POINTS OF ATTACHMENT, SEE SKETCH.

AFTER INSTALLATION, THE EXPOSED THREAD OF THE BOLT SHALL BE BURRED WITH A SHARP POINTED TOOL.

THE COST OF THE GUARDRAIL ANCHOR ASSEMBLY SHALL BE INCLUDED IN THE UNIT CONTRACT PRICE BID FOR CONCRETE BARRIER RAIL.

THE 1 1/4" Ø HOLES SHALL BE FORMED OR DRILLED WITH A CORE BIT. IMPACT TOOLS WILL NOT BE PERMITTED. ANY CONCRETE DAMAGED BY THIS WORK SHALL BE REPAIRED TO THE SATISFACTION OF THE ENGINEER.

THE C6 X 8.2 RUBRAIL IS TO BE ADHESIVELY ANCHORED TO THE RAIL USING THREE 3/4" Ø X 6" BOLTS WITH WASHERS. LEVEL ONE FIELD TESTING IS REQUIRED, AND THE YIELD LOAD OF THE 3/4" Ø BOLT IS 12 KIPS. FOR ADHESIVELY ANCHORED ANCHOR BOLTS OR DOWELS, SEE STANDARD SPECIFICATIONS. SEE ROADWAY STANDARD 862.03 FOR DETAILS AND LOCATION OF THE RUBRAIL.

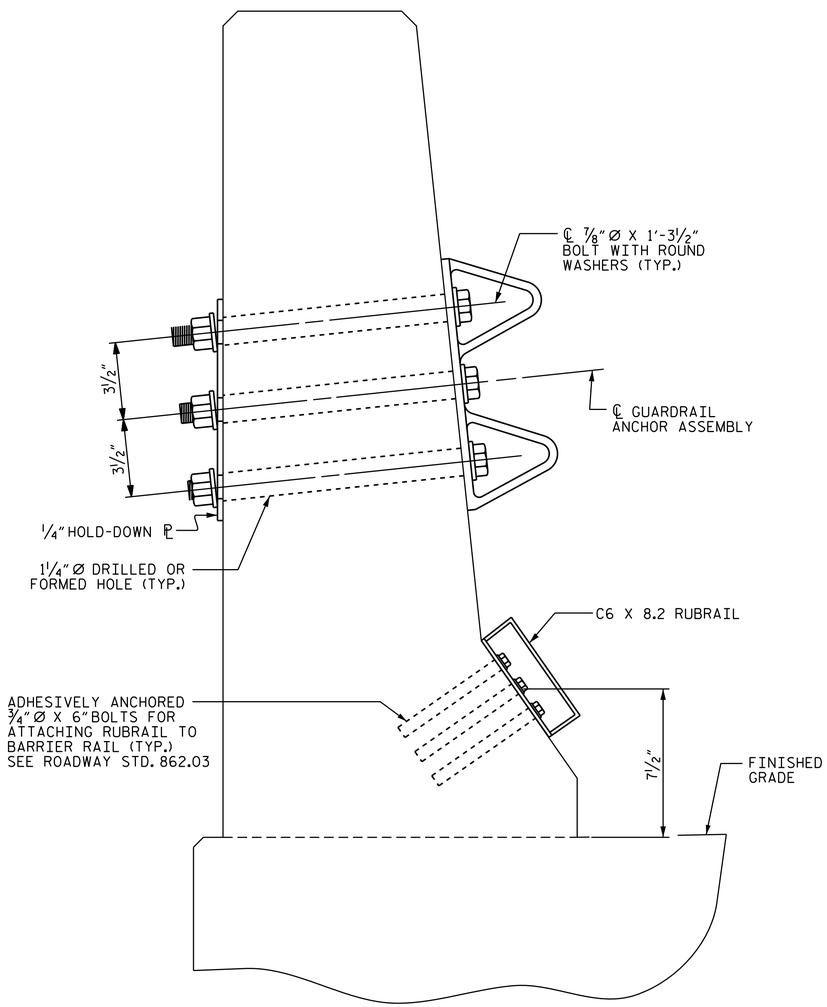

SECTION E-E

GUARDRAIL ANCHOR ASSEMBLY DETAILS

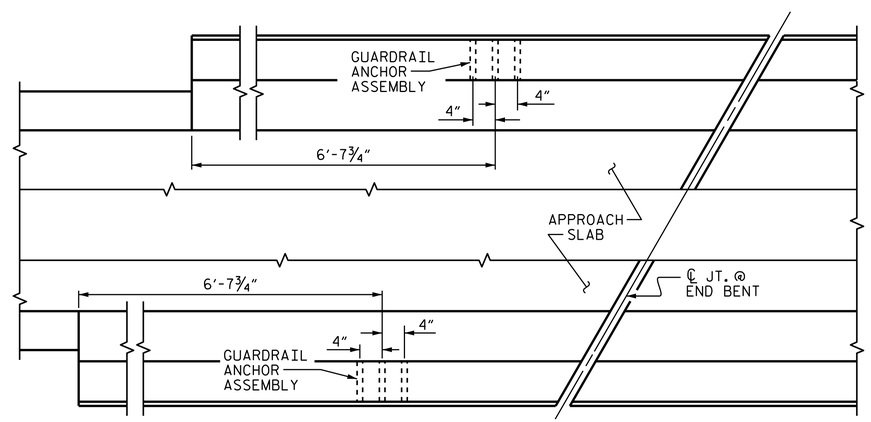

PLAN

LOCATION OF ANCHORS FOR GUARDRAIL

END BENT No. 1 SHOWN, END BENT No. 2 SIMILAR.

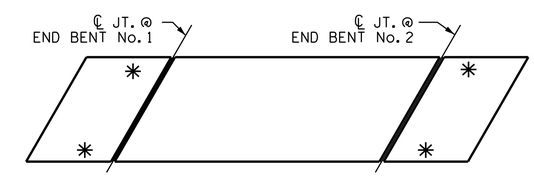

SKETCH SHOWING POINTS OF ATTACHMENTS

✳ DENOTES GUARDRAIL ANCHOR ASSEMBLY

PROJECT NO. B-3673

McDOWELL COUNTY

STATION: 29+38.00 -L-

STATE OF NORTH CAROLINA
DEPARTMENT OF TRANSPORTATION
RALEIGH

STANDARD

GUARDRAIL ANCHORAGE FOR BARRIER RAIL

NORTH CAROLINA PROFESSIONAL SEAL 17230 ENGINEER WAEL S. ARAFAT

DocuSigned by: Wael Arafat 4139C12A32AB406...

2/24/2015

REVISIONS							SHEET NO.
NO.	BY:	DATE:	NO.	BY:	DATE:		S-23
1			3				TOTAL SHEETS
2			4				43

(SHT 3b) STD. NO. GRA2

ASSEMBLED BY : V.X. NGUYEN	DATE : 9-26-14		
CHECKED BY : D. HODGE	DATE : 12-14		
DRAWN BY : TLA 5/06	REV. 10/1/11	MAA/GM	
CHECKED BY : GM 5/06	REV. 7/12	MAA/GM	
	REV. 6/13	MAA/GM	

DESIGN ENGINEER OF RECORD: J.P. McCARTHA DATE : 1-15

23-FEB-2015 17:48
R:\Structures\Plans\Final Plans\B-3673_SD_BR.dgn
warafat