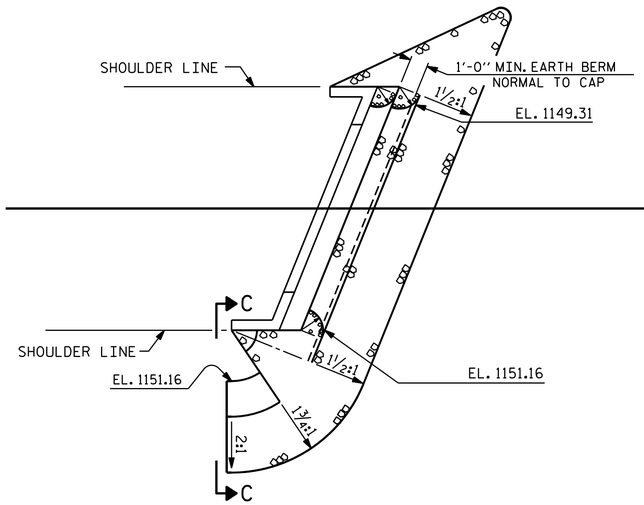

END BENT NO. 1

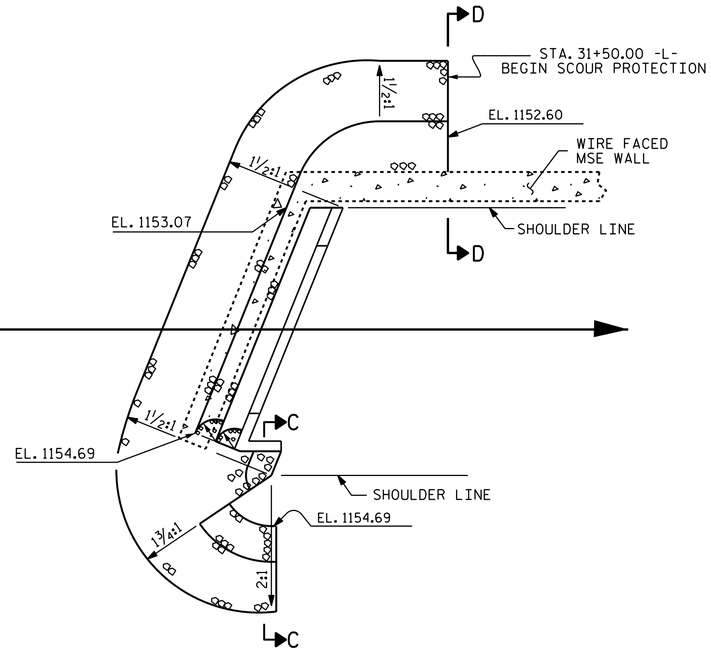

END BENT NO. 2

PLAN

ESTIMATED QUANTITIES		
BRIDGE @ STA. 29+38.00 -L-	RIP RAP CLASS II	GEOTEXTILE FOR DRAINAGE
	TONS	SQUARE YARDS
END BENT 1	110	122
END BENT 2	290	202

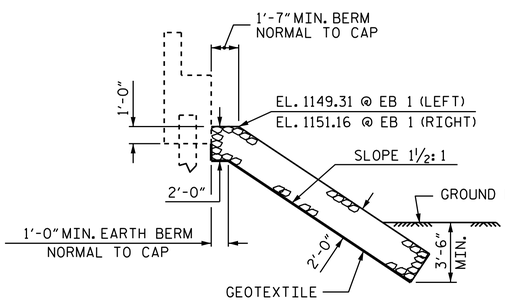

℄ SECTION
BERM RIP RAPPED
END BENT NO. 1

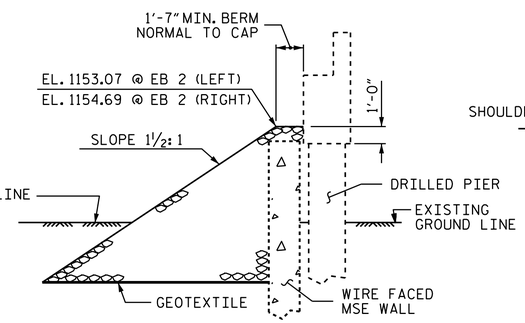

℄ SECTION
BERM RIP RAPPED
END BENT NO. 2

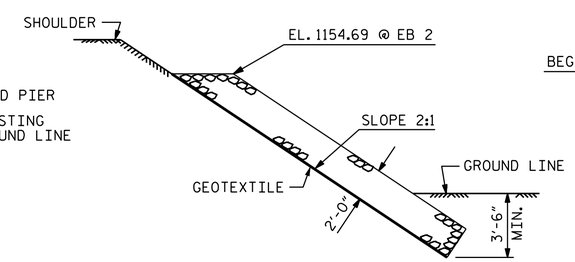

SECTION C-C

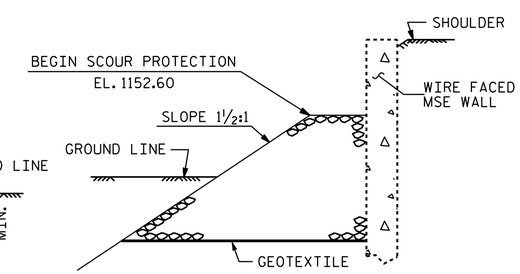

SECTION D-D

PROJECT NO. B-3673
MCDOWELL COUNTY
STATION: 29+38.00 -L-

STATE OF NORTH CAROLINA
DEPARTMENT OF TRANSPORTATION
RALEIGH

RIP RAP DETAILS

NORTH CAROLINA PROFESSIONAL SEAL 17230 ENGINEER WAEL S. ARAFAT

DocuSigned by: Wael Arafat 4139C12A32AB406...
2/24/2015

ASSEMBLED BY : A.M. LEE, PE	DATE : 1/7/2015		
CHECKED BY : J.P. MCCARTHA	DATE : 1/11/2015		
DRAWN BY : REK 1/84	REV. 5/1/06R	TLA/GM	
CHECKED BY : RDU 1/84	REV. 10/1/11	MAA/GM	
	REV. 12/21/11	MAA/GM	

REVISIONS								SHEET NO.
NO.	BY:	DATE:	NO.	BY:	DATE:			S-40
1			3					TOTAL SHEETS
2			4					43

24-FEB-2015 11:56
R:\Structures\Plans\Final Plans\B3673_SD_RR.dgn
warafat