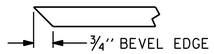

SECTION ''F''

(SEE NOTES)

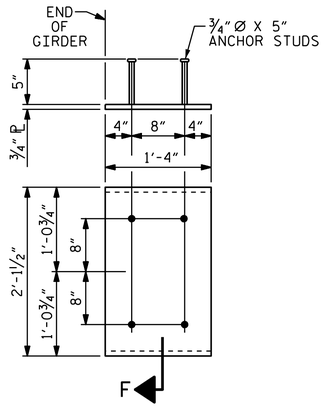

EMBEDDED PLATE ''B-1'' DETAILS FOR AASHTO TYPE IV GIRDER

(2 REQ'D PER GIRDER)

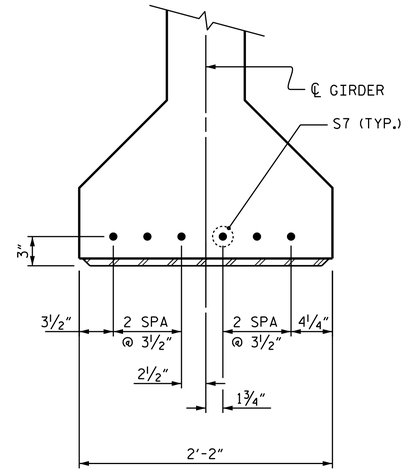

DETAIL ''A''

(FOR AASHTO TYPE IV GIRDERS)

NOTES

ALL PRESTRESSING STRANDS SHALL BE 7-WIRE LOW-RELAXATION GRADE 270 STRANDS AND SHALL CONFORM TO AASHTO M203 EXCEPT FOR SAMPLING REQUIREMENTS WHICH SHALL BE IN ACCORDANCE WITH THE STANDARD SPECIFICATIONS.

ALL REINFORCING STEEL SHALL BE GRADE 60.

APPLY EPOXY PROTECTIVE COATING TO END OF GIRDER SURFACES INDICATED IN ELEVATION VIEW.

EMBEDDED PLATE ''B-1'' SHALL BE GALVANIZED IN ACCORDANCE WITH THE STANDARD SPECIFICATIONS.

ANCHOR STUDS SHALL CONFORM TO AASHTO M169 GRADES 1010 THROUGH 1020 OR APPROVED EQUAL, AND SHALL MEET THE TYPE "B" REQUIREMENTS OF SUBSECTION 7.3 OF THE ANSI/AASHTO/AWS D1.5 BRIDGE WELDING CODE.

AT ENDS OF GIRDERS TO BE EMBEDDED IN CONCRETE DIAPHRAGMS OR END WALLS, PRESTRESSING STRANDS MAY EXTEND A MAXIMUM OF 2'' BEYOND THE GIRDER ENDS. OTHERWISE, PRESTRESSING STRANDS SHALL BE CUT FLUSH WITH THE GIRDER ENDS.

THE TRANSFER OF LOAD FROM THE ANCHORAGES TO THE GIRDER SHALL BE DONE WHEN CONCRETE HAS REACHED A COMPRESSIVE STRENGTH OF NOT LESS THAN 4000 PSI FOR SPANS A & D AND 6300 PSI FOR SPANS B & C.

DEPENDING ON THE TYPE OF SYSTEM USED TO SUPPORT THE DECK SLAB FORMS, PRESET ANCHORS MAY BE NECESSARY IN THE PRESTRESSED CONCRETE GIRDER.

THE TOP SURFACE OF THE GIRDER, EXCLUDING THE OUTSIDE 4'', SHALL BE RAKED TO A DEPTH OF 1/4''.

THE CONTRACTOR HAS THE OPTION TO PROVIDE, AT NO ADDITIONAL COST TO THE DEPARTMENT, 2 ADDITIONAL STRANDS AT THE TOP OF THE GIRDER TO FACILITATE TYING OF THE REINFORCING STEEL. THESE STRANDS SHALL BE PULLED TO A LOAD OF 4500 lbs.

DEAD LOAD DEFLECTION TABLE FOR SPAN A GIRDERS

0.6'' Ø LOW RELAXATION		GIRDERS 1 THRU 5										
TENTH POINTS		0	0.1	0.2	0.3	0.4	0.5	0.6	0.7	0.8	0.9	0
CAMBER (GIRDER ALONE IN PLACE)	↑	0.0	0.010	0.020	0.027	0.031	0.033	0.031	0.027	0.020	0.010	0.0
* DEFLECTION DUE TO SUPERIMPOSED D.L.	↓	0.0	0.003	0.005	0.007	0.008	0.008	0.008	0.007	0.005	0.003	0.0
FINAL CAMBER	↑	0.0	1/16''	3/16"	1/4"	1/4"	5/16"	1/4"	1/4"	3/16"	1/16''	0.0

* INCLUDES FUTURE WEARING SURFACE
ALL VALUES ARE SHOWN IN FEET (DECIMAL FORM), EXCEPT '' FINAL CAMBER '', WHICH IS GIVEN IN INCHES (FRACTION FORM).

DEAD LOAD DEFLECTION TABLE FOR SPAN B GIRDERS

0.6'' Ø LOW RELAXATION		GIRDER 1										
TENTH POINTS		0	0.1	0.2	0.3	0.4	0.5	0.6	0.7	0.8	0.9	0
CAMBER (GIRDER ALONE IN PLACE)	↑	0.0	0.062	0.118	0.161	0.189	0.199	0.189	0.161	0.118	0.062	0.0
* DEFLECTION DUE TO SUPERIMPOSED D.L.	↓	0.0	0.046	0.087	0.119	0.140	0.147	0.140	0.119	0.087	0.046	0.0
FINAL CAMBER	↑	0.0	3/16''	3/8''	1/2''	9/16''	5/8''	9/16''	1/2''	3/8''	3/16''	0.0

0.6'' Ø LOW RELAXATION		GIRDERS 2 THRU 4										
TENTH POINTS		0	0.1	0.2	0.3	0.4	0.5	0.6	0.7	0.8	0.9	0
CAMBER (GIRDER ALONE IN PLACE)	↑	0.0	0.062	0.118	0.161	0.189	0.198	0.189	0.161	0.118	0.062	0.0
* DEFLECTION DUE TO SUPERIMPOSED D.L.	↓	0.0	0.048	0.092	0.125	0.147	0.154	0.147	0.125	0.092	0.048	0.0
FINAL CAMBER	↑	0.0	3/16''	5/16''	7/16''	1/2''	1/2''	1/2''	7/16''	5/16''	3/16''	0.0

0.6'' Ø LOW RELAXATION		GIRDER 5										
TENTH POINTS		0	0.1	0.2	0.3	0.4	0.5	0.6	0.7	0.8	0.9	0
CAMBER (GIRDER ALONE IN PLACE)	↑	0.0	0.062	0.117	0.161	0.188	0.198	0.188	0.161	0.117	0.062	0.0
* DEFLECTION DUE TO SUPERIMPOSED D.L.	↓	0.0	0.043	0.081	0.111	0.130	0.136	0.130	0.111	0.081	0.043	0.0
FINAL CAMBER	↑	0.0	1/4''	7/16''	5/8''	11/16''	3/4''	11/16''	5/8''	7/16''	1/4''	0.0

* INCLUDES FUTURE WEARING SURFACE
ALL VALUES ARE SHOWN IN FEET (DECIMAL FORM), EXCEPT '' FINAL CAMBER '', WHICH IS GIVEN IN INCHES (FRACTION FORM).

DEAD LOAD DEFLECTION TABLE FOR SPAN C GIRDERS

0.6'' Ø LOW RELAXATION		GIRDER 1										
TENTH POINTS		0	0.1	0.2	0.3	0.4	0.5	0.6	0.7	0.8	0.9	0
CAMBER (GIRDER ALONE IN PLACE)	↑	0.0	0.062	0.118	0.162	0.189	0.199	0.189	0.162	0.118	0.062	0.0
* DEFLECTION DUE TO SUPERIMPOSED D.L.	↓	0.0	0.046	0.088	0.120	0.140	0.147	0.140	0.120	0.088	0.046	0.0
FINAL CAMBER	↑	0.0	3/16''	3/8''	1/2"	9/16"	5/8''	9/16"	1/2"	3/8''	3/16''	0.0

0.6'' Ø LOW RELAXATION		GIRDERS 2 THRU 4										
TENTH POINTS		0	0.1	0.2	0.3	0.4	0.5	0.6	0.7	0.8	0.9	0
CAMBER (GIRDER ALONE IN PLACE)	↑	0.0	0.062	0.118	0.161	0.189	0.198	0.189	0.161	0.118	0.062	0.0
* DEFLECTION DUE TO SUPERIMPOSED D.L.	↓	0.0	0.049	0.092	0.126	0.147	0.155	0.147	0.126	0.092	0.049	0.0
FINAL CAMBER	↑	0.0	3/16''	5/16''	7/16''	1/2''	1/2''	1/2''	7/16''	5/16''	3/16''	0.0

0.6'' Ø LOW RELAXATION		GIRDER 5										
TENTH POINTS		0	0.1	0.2	0.3	0.4	0.5	0.6	0.7	0.8	0.9	0
CAMBER (GIRDER ALONE IN PLACE)	↑	0.0	0.062	0.117	0.161	0.188	0.197	0.188	0.161	0.117	0.062	0.0
* DEFLECTION DUE TO SUPERIMPOSED D.L.	↓	0.0	0.043	0.081	0.110	0.129	0.136	0.129	0.110	0.081	0.043	0.0
FINAL CAMBER	↑	0.0	1/4''	7/16''	5/8''	11/16''	3/4''	11/16''	5/8''	7/16''	1/4''	0.0

* INCLUDES FUTURE WEARING SURFACE
ALL VALUES ARE SHOWN IN FEET (DECIMAL FORM), EXCEPT '' FINAL CAMBER '', WHICH IS GIVEN IN INCHES (FRACTION FORM).

DEAD LOAD DEFLECTION TABLE FOR SPAN D GIRDERS

0.6'' Ø LOW RELAXATION		GIRDERS 1 THRU 5										
TENTH POINTS		0	0.1	0.2	0.3	0.4	0.5	0.6	0.7	0.8	0.9	0
CAMBER (GIRDER ALONE IN PLACE)	↑	0.0	0.014	0.026	0.035	0.041	0.043	0.041	0.035	0.026	0.014	0.0
* DEFLECTION DUE TO SUPERIMPOSED D.L.	↓	0.0	0.010	0.020	0.027	0.032	0.033	0.032	0.027	0.020	0.010	0.0
FINAL CAMBER	↑	0.0	1/16''	1/16''	1/8''	1/8''	1/8''	1/8''	1/8''	1/16''	1/16''	0.0

* INCLUDES FUTURE WEARING SURFACE
ALL VALUES ARE SHOWN IN FEET (DECIMAL FORM), EXCEPT '' FINAL CAMBER '', WHICH IS GIVEN IN INCHES (FRACTION FORM).

PROJECT NO. B-3673
McDOWELL COUNTY
STATION: 29+38.00 -L-

SHEET 5 OF 7

NORTH CAROLINA PROFESSIONAL SEAL 17230 ENGINEER WAEL S. ARAFAT

DocuSigned by: Wael Arafat
4139C12A32AB406...

3/5/2015

STATE OF NORTH CAROLINA
DEPARTMENT OF TRANSPORTATION
RALEIGH

PRESTRESSED CONCRETE GIRDER CONTINUOUS FOR LIVE LOAD DETAILS

REVISIONS						SHEET NO.
NO.	BY:	DATE:	NO.	BY:	DATE:	S-18
1			3			TOTAL SHEETS
2			4			43

DRAWN BY : V.X. NGUYEN DATE : 10-27-14
CHECKED BY : D. HODGE DATE : 12-14

DESIGN ENGINEER OF RECORD:
J.P. McCARTHA DATE : 1-14-15

05-MAR-2015 08:19
R:\Structures\Plans\FinalPlans\B-3673_SD_G*.dgn
warafat