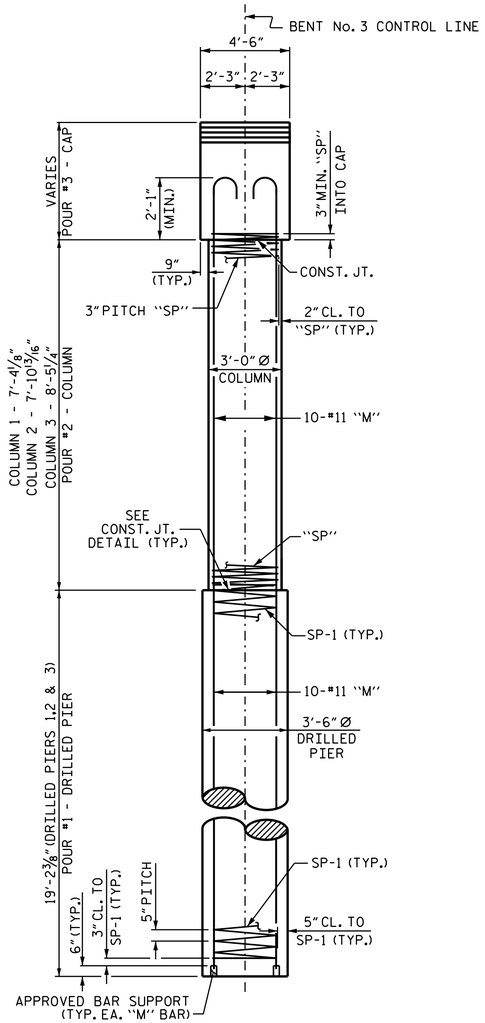

END ELEVATION

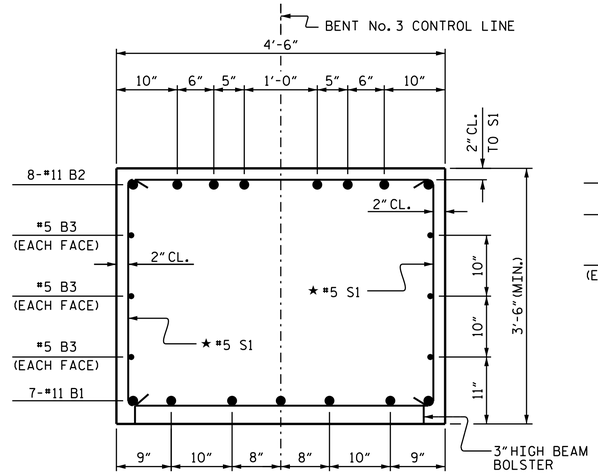

SECTION A-A

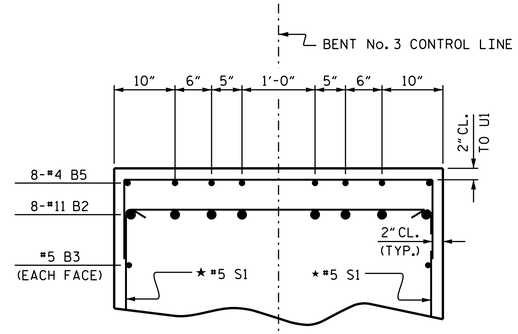

PARTIAL SECTION B-B

★ INVERT ALTERNATE STIRRUPS

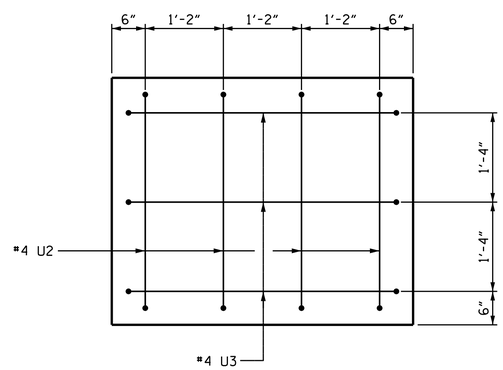

VIEW X-X

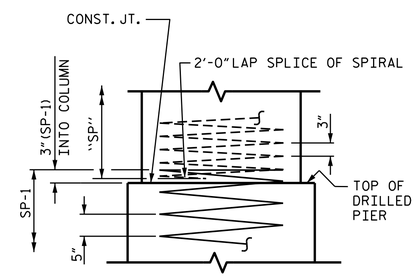

CONSTRUCTION JOINT DETAIL

BAR TYPES

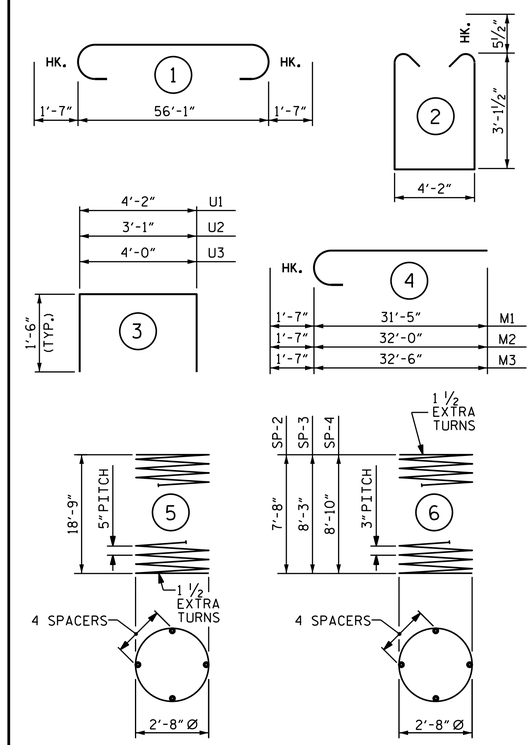

ALL BAR DIMENSIONS ARE OUT TO OUT.

BILL OF MATERIAL

BENT No. 3

BAR	NO.	SIZE	TYPE	LENGTH	WEIGHT
B1	7	#11	STR	56'-3"	2,092
B2	8	#11	1	59'-3"	2,518
B3	6	#5	STR	56'-3"	352
B4	24	#4	STR	4'-10"	77
B5	8	#4	STR	5'-10"	31
B6	8	#4	STR	6'-10"	37
M1	10	#11	4	33'-0"	1,753
M2	10	#11	4	33'-7"	1,784
M3	10	#11	4	34'-1"	1,811
S1	66	#5	2	11'-4"	780
U1	48	#4	3	7'-2"	230
U2	8	#4	3	6'-1"	33
U3	6	#4	3	7'-0"	28

REINFORCING STEEL FOR BENT No. 3 — 11,526 LBS.

SP-1	3	✱	5	386'-7"	1,210
SP-2	1	✱✱	6	272'-4"	182
SP-3	1	✱✱	6	288'-10"	193
SP-4	1	✱✱	6	305'-4"	204

SPIRAL COLUMN REINFORCING STEEL — 1,789 LBS.

CLASS A CONCRETE BREAKDOWN
- POUR #2 (COLUMNS) — 6.2 C.Y.
- POUR #3 (CAP) — 34.8 C.Y.
- TOTAL CLASS A CONCRETE — 41.0 C.Y.

DRILLED PIERS QUANTITIES:
DRILLED PIER CONCRETE
- POUR #1 (DRILLED PIERS) — 20.5 C.Y.
- 3'-6" Ø DRILLED PIERS IN SOIL — 14.60 LIN. FT.
- 3'-6" Ø DRILLED PIERS NOT IN SOIL — 43.00 LIN. FT.
- PERMANENT STEEL CASING FOR 3'-6" Ø DRILLED PIERS — 16.20 LIN. FT.
- CSL TUBES — 249 LIN. FT.

✱ THE SP-1 SPIRAL REINFORCING STEEL SHALL BE W31 OR D-31 COLD DRAWN WIRE OR #5 PLAIN OR DEFORMED BAR.

✱✱ THE SP-2 THRU SP-4 SPIRAL REINFORCING STEEL SHALL BE W20 OR D-20 COLD DRAWN WIRE OR #4 PLAIN OR DEFORMED BAR.

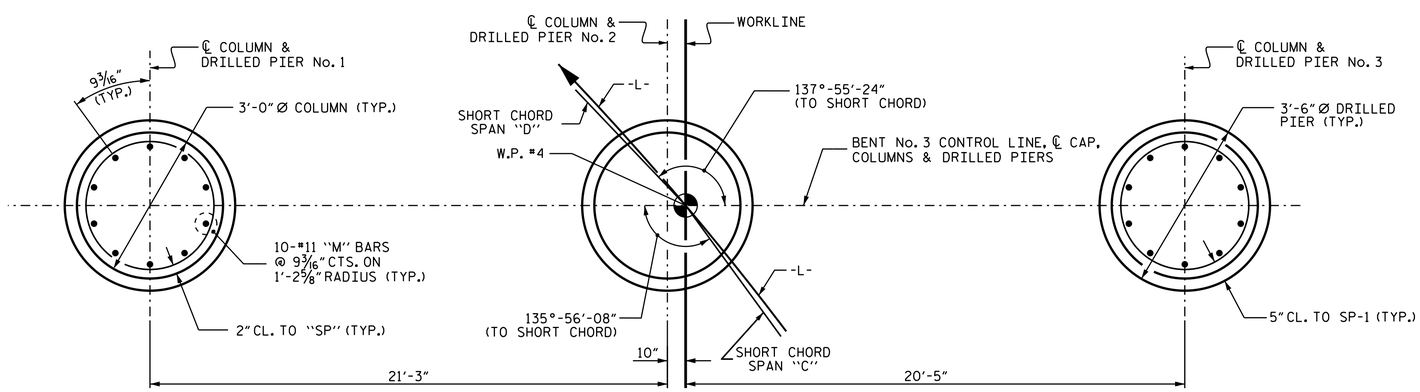

PLAN OF DRILLED PIERS & COLUMNS

(REINFORCING STEEL IS TYPICAL FOR EACH COLUMN & DRILLED PIER)

NORTH CAROLINA PROFESSIONAL SEAL 17230 ENGINEER WAEL S. ARAFAT

DocuSigned by: Wael Arafat 4139C12A32AB406... 2/24/2015

PROJECT NO. B-3673
MCDOWELL COUNTY
STATION: 29+38.00 -L-

SHEET 2 OF 2

STATE OF NORTH CAROLINA
DEPARTMENT OF TRANSPORTATION
RALEIGH

SUBSTRUCTURE

BENT No. 3

REVISIONS							SHEET NO.
NO.	BY:	DATE:	NO.	BY:	DATE:		S-36
1			3				TOTAL SHEETS
2			4				43

DRAWN BY : R.P. PATEL DATE : 3-20-14
CHECKED BY : B. N. BARODAWALA DATE : 1-6-15
DESIGN ENGINEER OF RECORD: J. P. MCCARTHA DATE : 1-21-15

24-FEB-2015 09:23
R:\Structures\Plans\FinalPlans\B-3673_SD_B*3.dgn
warafat