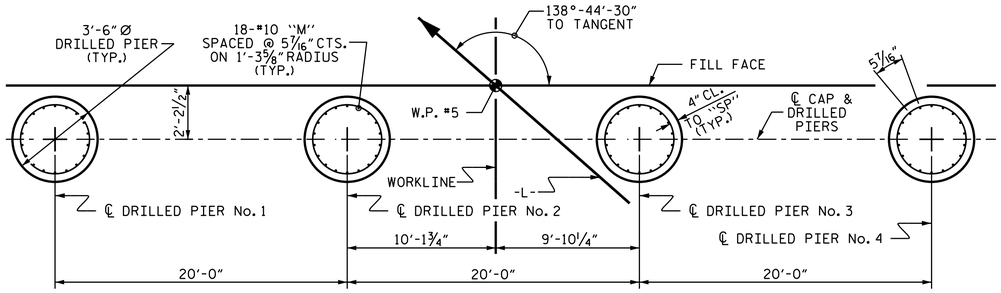

PLAN OF DRILLED PIERS

(REINFORCING STEEL IS TYPICAL FOR EACH DRILLED PIER)

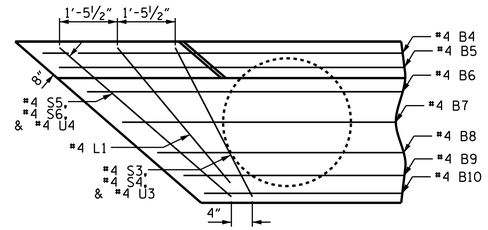

DETAIL "B"

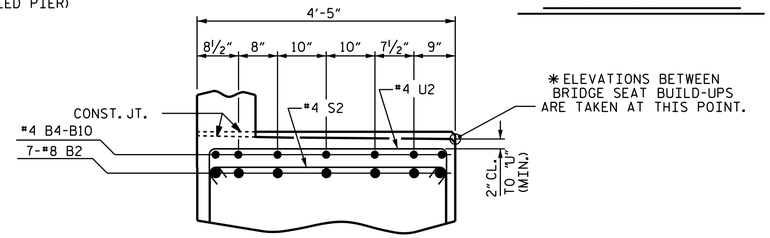

PARTIAL SECTION B-B

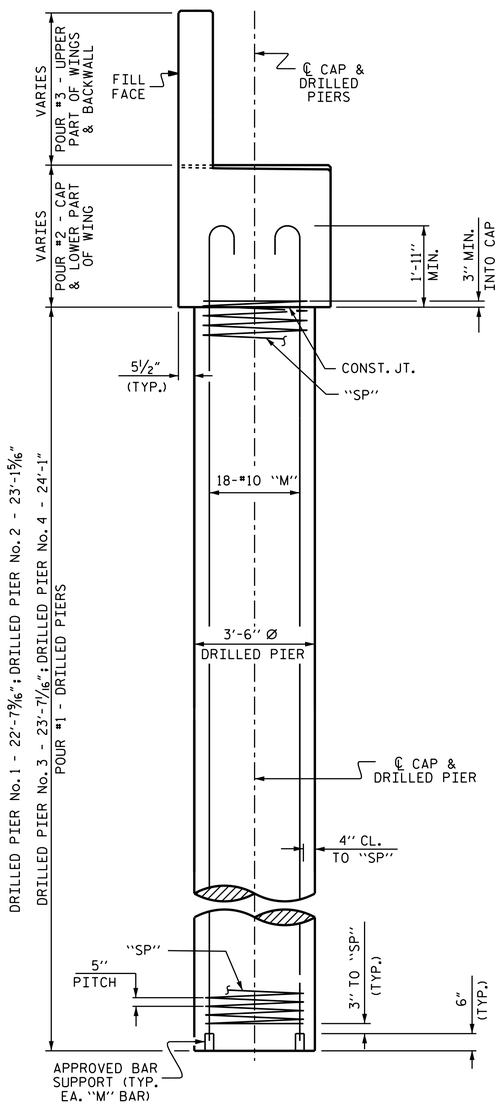

END ELEVATION

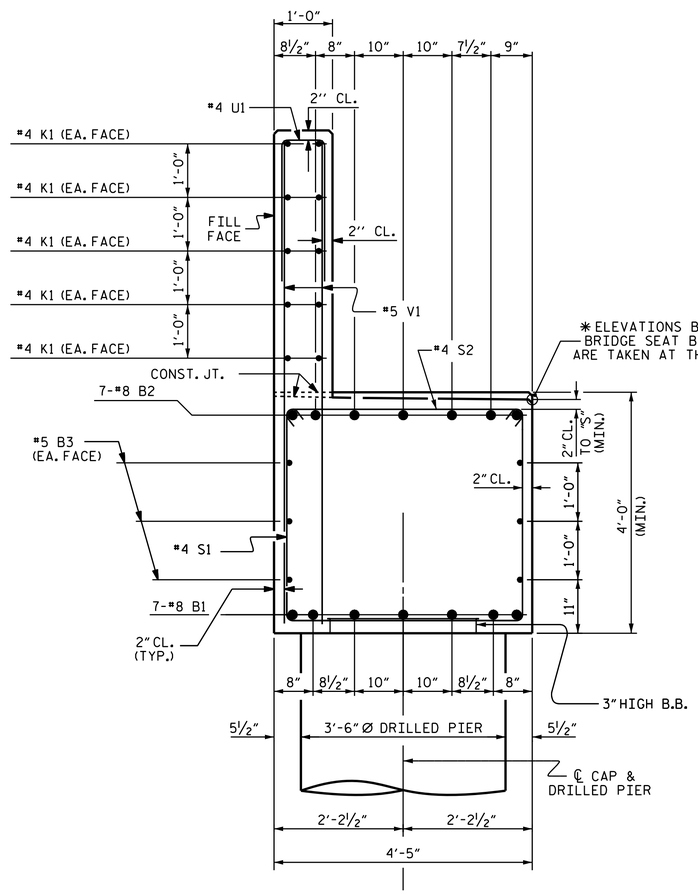

SECTION A-A

REINFORCING STEEL IN PIER NOT SHOWN FOR CLARITY.

BAR TYPES

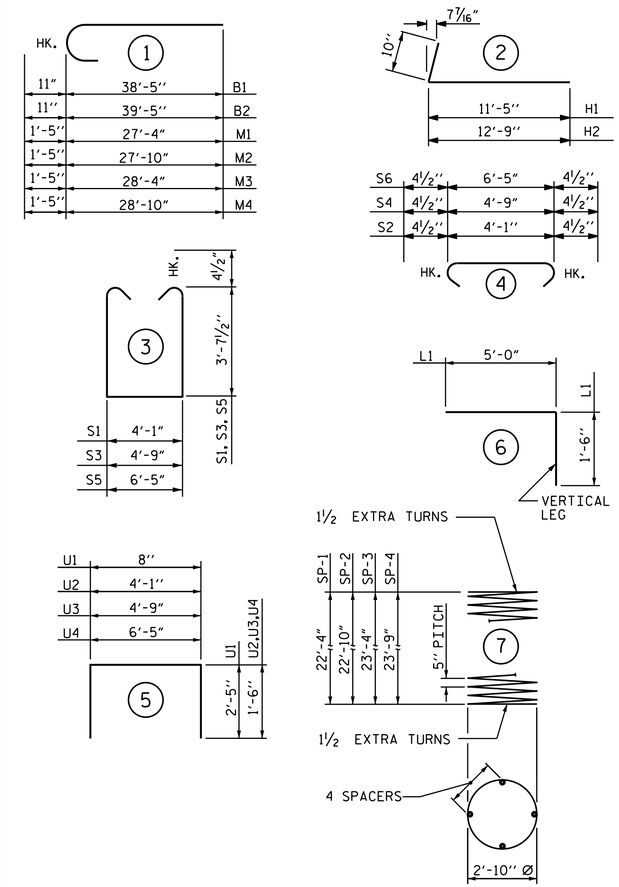

ALL BAR DIMENSIONS ARE OUT TO OUT.

CLASS A CONCRETE BREAKDOWN	
POUR #2 (CAP & LOWER PART OF WING)	52.0 C.Y.
POUR #3 (UPPER PART OF WINGS AND BACKWALL)	16.3 C.Y.
TOTAL CLASS A CONCRETE	68.3 C.Y.

DRILLED PIER QUANTITIES:		
DRILLED PIER CONCRETE POUR #1 (DRILLED PIERS)	33.3	C.Y.
3'-6" Ø DRILLED PIER IN SOIL	61.40	LIN. FT.
3'-6" Ø DRILLED PIER NOT IN SOIL	32.00	LIN. FT.
PERMANENT STEEL CASING FOR 3'-6" Ø DRILLED PIER	51.40	LIN. FT.
CSL TUBES	398	LIN. FT.

BILL OF MATERIAL

END BENT No. 2

BAR	NO.	SIZE	TYPE	LENGTH	WEIGHT
B1	14	#8	1	39'-4"	1,470
B2	14	#8	1	40'-4"	1,508
B3	12	#5	STR	37'-6"	469
B4	1	#4	STR	15'-3"	10
B5	1	#4	STR	14'-9"	10
B6	1	#4	STR	13'-11"	9
B7	1	#4	STR	12'-11"	9
B8	1	#4	STR	11'-10"	8
B9	1	#4	STR	11'-1"	7
B10	1	#4	STR	10'-6"	7
B11	28	#4	STR	2'-6"	47
H1	20	#6	2	12'-3"	368
H2	20	#6	2	13'-7"	408
K1	30	#4	STR	25'-4"	508
K2	4	#4	STR	3'-11"	10
K3	2	#4	STR	3'-11"	5
K4	2	#4	STR	3'-8"	5
L1	1	#4	6	6'-6"	4
M1	18	#10	STR	28'-9"	2,227
M2	18	#10	STR	29'-3"	2,266
M3	18	#10	STR	29'-9"	2,304
M4	18	#10	STR	30'-3"	2,343
S1	79	#4	3	12'-1"	638
S2	79	#4	4	4'-10"	255
S3	1	#4	3	12'-9"	9
S4	1	#4	4	5'-6"	4
S5	1	#4	3	14'-5"	10
S6	1	#4	4	7'-2"	5
U1	62	#4	5	5'-6"	228
U2	20	#4	5	7'-1"	95
U3	1	#4	5	7'-9"	5
U4	1	#4	5	9'-5"	6
V1	124	#5	STR	8'-7"	1,110
V2	10	#5	STR	10'-6"	110
V3	34	#5	STR	10'-2"	361

REINFORCING STEEL 16,838 LBS.

SP-1	1	✱	7	495'-2"	516
SP-2	1	✱	7	505'-8"	527
SP-3	1	✱	7	516'-2"	538
SP-4	1	✱	7	524'-11"	547

SPIRAL COLUMN REINFORCING STEEL 2,128 LBS.

✱ THE SP-1 THRU SP-4 SPIRAL REINFORCING STEEL SHALL BE W31 OR D-31 COLD DRAWN WIRE OR #5 PLAIN OR DEFORMED BAR.

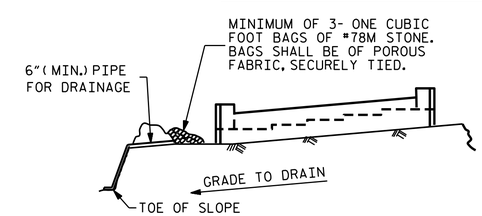

BAGGED STONE AND PIPE SHALL BE PLACED IMMEDIATELY AFTER COMPLETION OF END BENT EXCAVATION. PIPE MAY BE EITHER CONCRETE, CORRUGATED STEEL, CORRUGATED ALUMINUM ALLOY, OR CORRUGATED PLASTIC. PERFORATED PIPE WILL NOT BE ALLOWED.

BAGGED STONE SHALL REMAIN IN PLACE UNTIL THE ENGINEER DIRECTS THAT IT BE REMOVED. THE CONTRACTOR SHALL REMOVE AND DISPOSE OF SILT ACCUMULATIONS AT BAGGED STONE WHEN SO DIRECTED BY THE ENGINEER. BAGS SHALL BE REMOVED AND REPLACED WHENEVER THE ENGINEER DETERMINES THAT THEY HAVE DETERIORATED AND LOST THEIR EFFECTIVENESS.

NO SEPARATE PAYMENT WILL BE MADE FOR THIS WORK AND THE ENTIRE COST OF THIS WORK SHALL BE INCLUDED IN THE UNIT CONTRACT PRICE BID FOR THE SEVERAL PAY ITEMS.

TEMPORARY DRAINAGE AT END BENT

NORTH CAROLINA PROFESSIONAL SEAL 17230 ENGINEER WAEL S. ARAFAT

DocuSigned by: Wael Arafat 4139C12A32AB406... 2/24/2015

PROJECT NO. B-3673

MCDOWELL COUNTY

STATION: 29+38.00 -L-

SHEET 3 OF 3

STATE OF NORTH CAROLINA
DEPARTMENT OF TRANSPORTATION
RALEIGH

SUBSTRUCTURE
END BENT No. 2

REVISIONS						SHEET NO.
NO.	BY:	DATE:	NO.	BY:	DATE:	S-39
1			3			TOTAL SHEETS
2			4			43

DRAWN BY : V.X. NGUYEN / J.P. MCCARTHA DATE : 11-24-14
CHECKED BY : B.N. BARODAWALA DATE : 12-12-14
DESIGN ENGINEER OF RECORD: A.M. LEE, PE DATE : 1-13-15

24-FEB-2015 09:44
R:\Structures\Plans\Final Plans\B-3673_SD_E*2.dgn
warafat