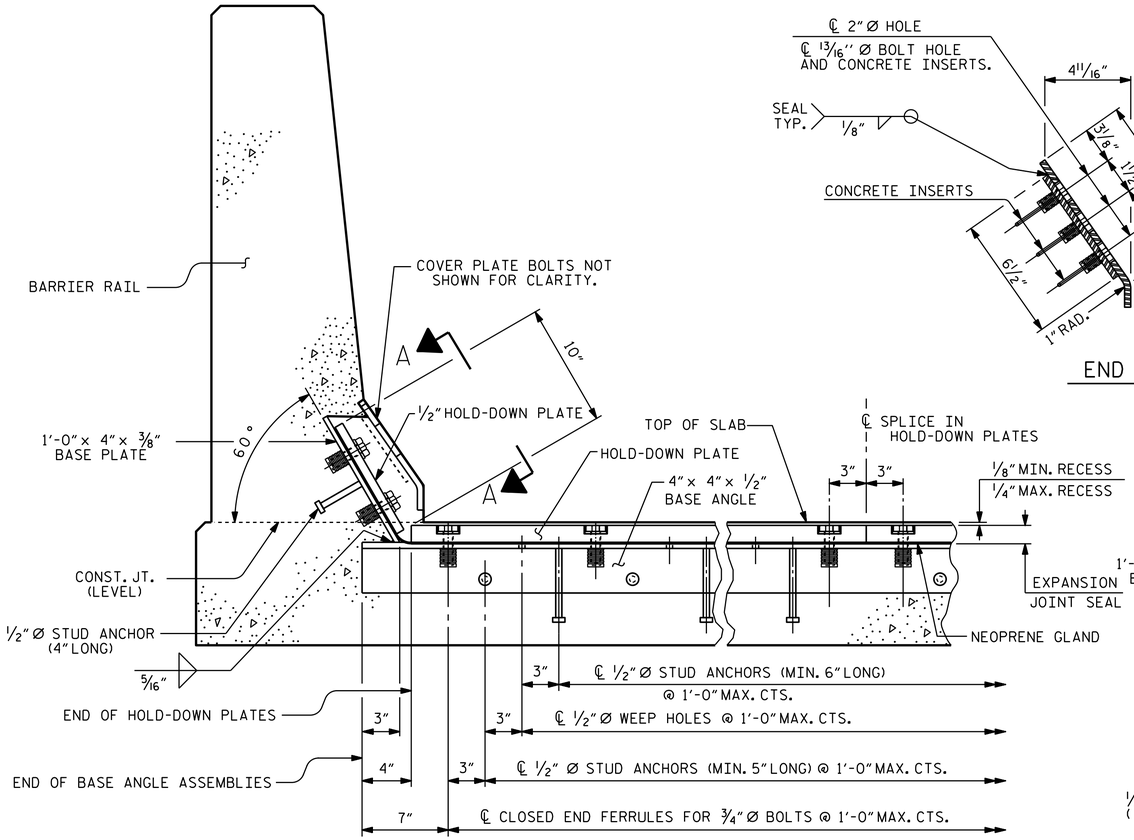

SECTION THRU RAIL NORMAL TO JOINT

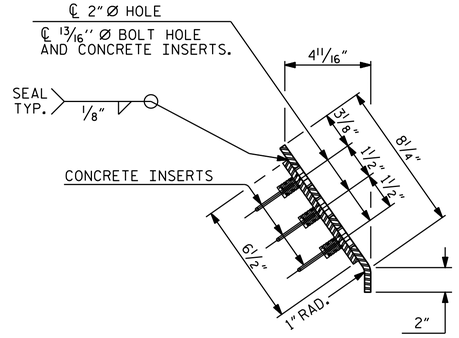

END VIEW

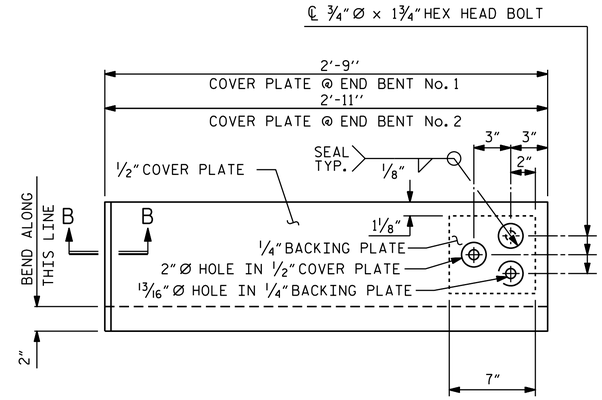

TYPE II - ELEVATION VIEW

COVER PLATE DETAILS

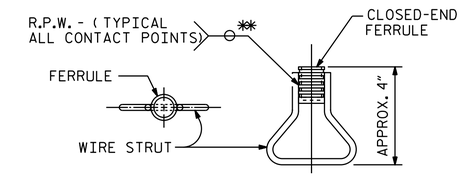

PLAN ELEVATION

CONCRETE INSERT

** EACH WELDED ATTACHMENT OF WIRE TO FERRULE SHALL DEVELOP THE TENSILE STRENGTH OF THE WIRE.

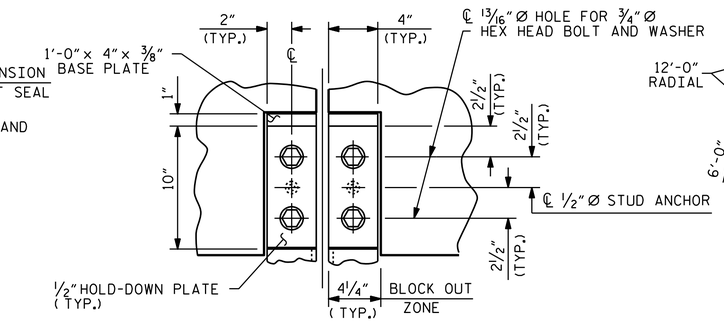

SECTION A-A

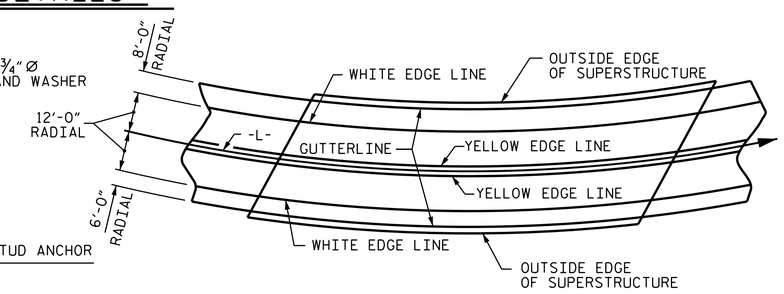

PAVEMENT MARKING ALIGNMENT

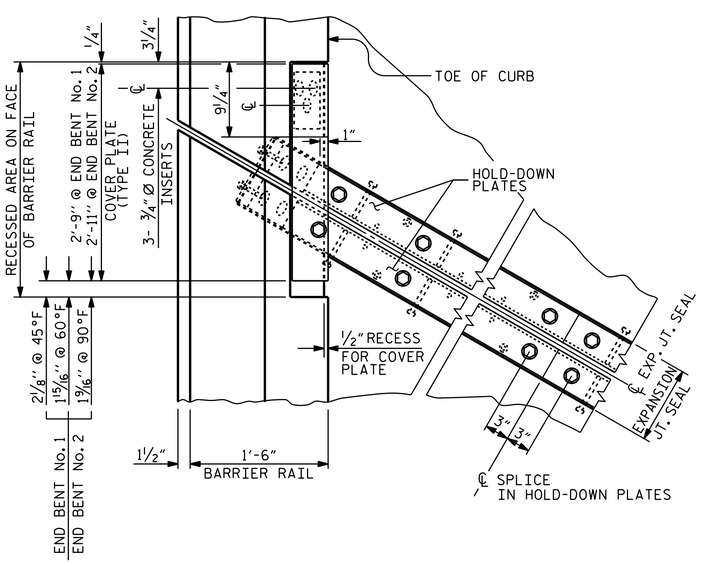

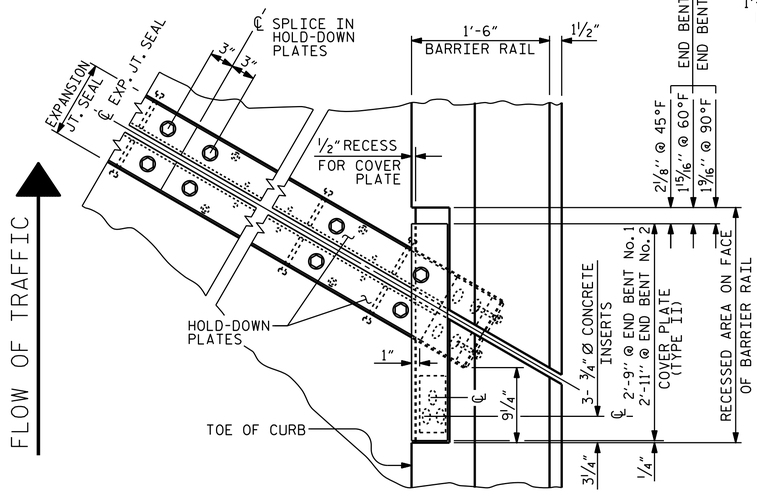

PLAN OF EXPANSION JOINT SEAL

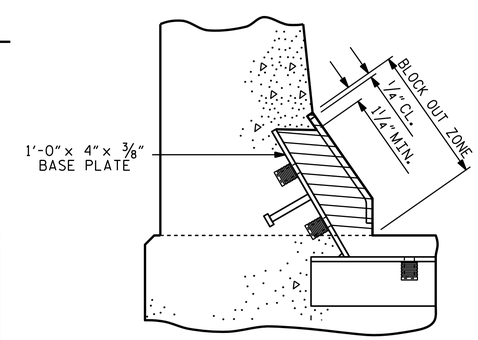

BLOCK OUT DETAIL

SEE " SECTION A - A " FOR OTHER DETAILS.

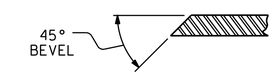

SECTION B - B

PROJECT NO. B-3673

McDOWELL COUNTY

STATION: 29+38.00 -L-

SHEET 2 OF 2

STATE OF NORTH CAROLINA
DEPARTMENT OF TRANSPORTATION
RALEIGH

STANDARD

EXPANSION JOINT SEAL DETAILS FOR BARRIER RAIL

NORTH CAROLINA PROFESSIONAL SEAL 17230 ENGINEER WAEL S. ARAFAT

DocuSigned by: Wael Arafat 4139C12A32AB406...

2/24/2015

REVISIONS						SHEET NO.
NO.	BY:	DATE:	NO.	BY:	DATE:	S-25
1			3			TOTAL SHEETS
2			4			43

ASSEMBLED BY : V.X. NGUYEN	DATE : 9-18-14		
CHECKED BY : D. HODGE	DATE : 12-14		
DRAWN BY : REK 9/87	REV. 10/1/11	MAA/GM	
CHECKED BY : CRK 10/87	REV. 7/12	MAA/GM	
	REV. 6/13	MAA/GM	

DESIGN ENGINEER OF RECORD: J.P. McCARTHA DATE : 1-15

24-FEB-2015 07:47
R:\Structures\Plans\Final Plans\B-3673_SD_JS.dgn
warafat

STD. NO. EJS2 SHT 2