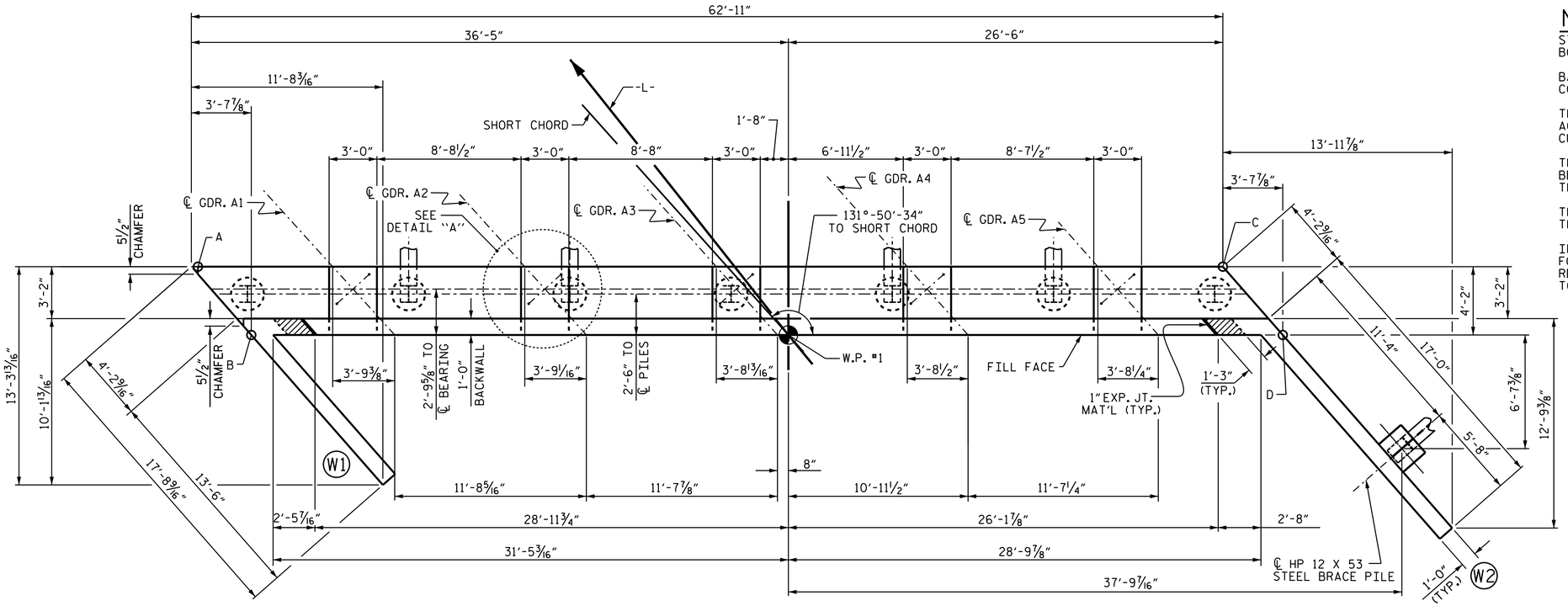

PLAN

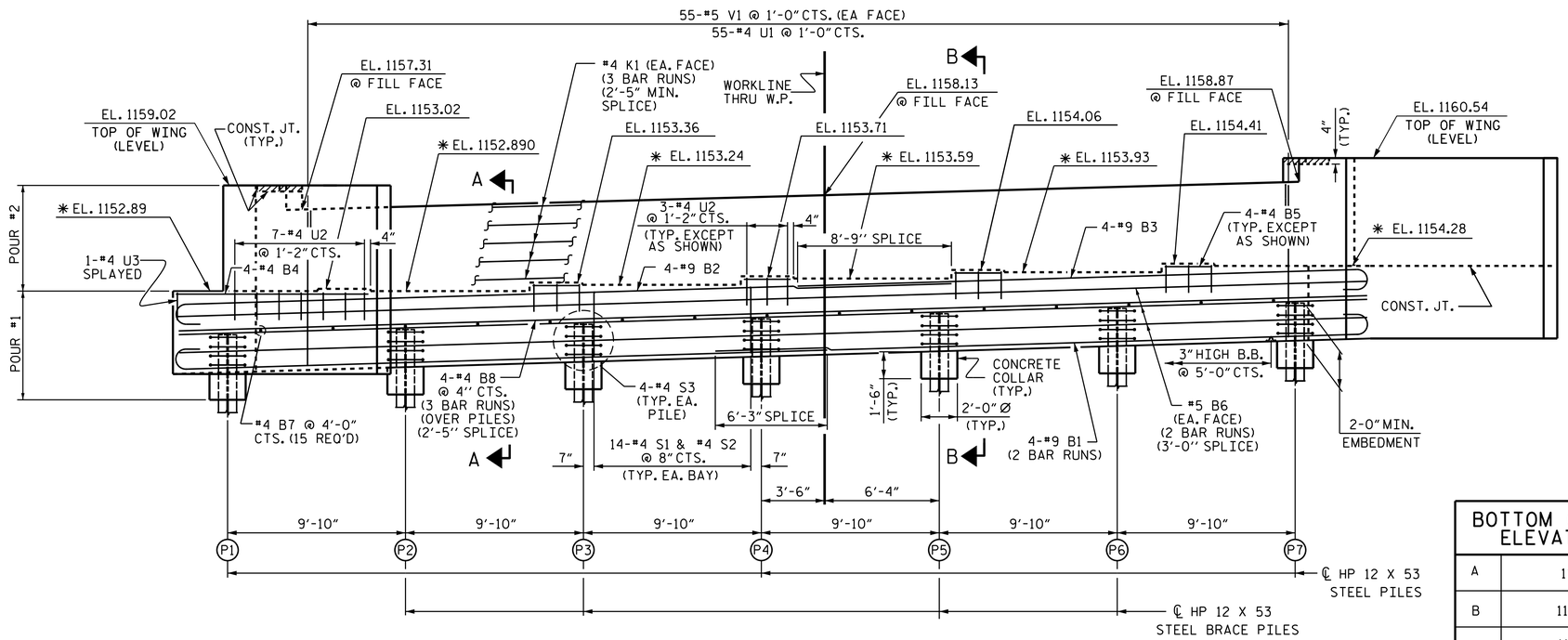

ELEVATION

(FOR CLARITY BRACE PILE IN WING NOT SHOWN)

✱ FOR LOCATION OF ELEVATION, SEE "SECTION A-A", SHEET 3 OF 3.

NOTES

STIRRUPS IN CAP MAY BE SHIFTED AS NECESSARY TO CLEAR ANCHOR BOLTS.

BACKWALL SHALL BE PLACED BEFORE APPLYING THE EPOXY PROTECTIVE COATING.

THE TOP SURFACE AREAS OF THE END BENT CAPS SHALL BE CURED IN ACCORDANCE WITH THE STANDARD SPECIFICATIONS EXCEPT THE MEMBRANE CURING COMPOUND METHOD SHALL NOT BE USED.

THE TOP SURFACE OF THE CAP EXCEPT THE BRIDGE SEAT BUILDUPS SHALL BE SLOPED TRANSVERSELY FROM THE FILL FACE TO THE BACK FACE AT THE RATE OF 2%.

THE CONCRETE IN THE SHADED AREA OF THE WING SHALL BE POURED AFTER THE BARRIER RAIL IS CAST IF SLIP FORMING IS USED.

INSTALL THE 4" DIA. DRAIN PIPE THROUGH THE WING WALL AS REQUIRED FOR REINFORCED BRIDGE APPROACH FILLS, SEE THE ROADWAY PLANS. REINFORCING STEEL IN THE WING WALL MAY BE SHIFTED AS NECESSARY TO CLEAR THE DRAIN PIPE.

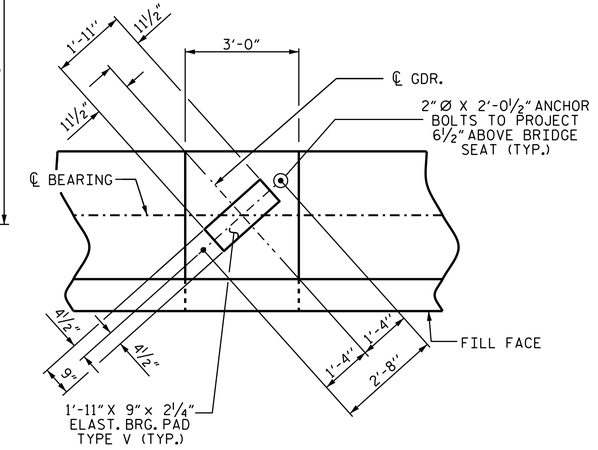

DETAIL "A"

(DIMENSIONS TYP. EA. GDR.)

TOP OF PILE ELEVATION	
P1	1150.42
P2	1150.70
P3	1151.00
P4	1151.29
P5	1151.58
P6	1151.87
P7	1152.16

BOTTOM OF CAP ELEVATION	
A	1148.31
B	1148.40
C	1150.16
D	1150.27

PROJECT NO. B-3673

McDOWELL COUNTY

STATION: 29+38.00 -L-

SHEET 1 OF 3

STATE OF NORTH CAROLINA
DEPARTMENT OF TRANSPORTATION
RALEIGH

SUBSTRUCTURE

END BENT No. 1

NORTH CAROLINA PROFESSIONAL SEAL 17230 ENGINEER WAEL S. ARAFAT

DocuSigned by: Wael Arafat 4139C12A32AB406...

2/24/2015

REVISIONS							
NO.	BY:	DATE:	NO.	BY:	DATE:	SHEET NO.	S-28
1			3			TOTAL SHEETS	43
2			4				

DRAWN BY : V.X. NGUYEN / R. PATEL DATE : 11-10-14
CHECKED BY : W.J. HARRIS DATE : 12-22-14
DESIGN ENGINEER OF RECORD: A.M. LEE DATE : 1/11/15

24-FEB-2015 08:28
R:\Structures\Plans\FinalPlans\B-3673_SD_E*1.dgn
warafat