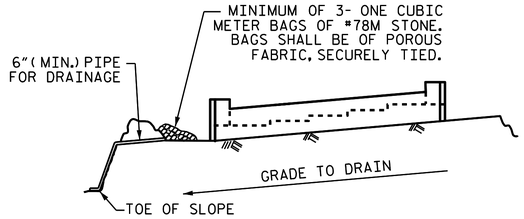

BAGGED STONE AND PIPE SHALL BE PLACED IMMEDIATELY AFTER COMPLETION OF END BENT EXCAVATION. PIPE MAY BE EITHER CONCRETE, CORRUGATED STEEL, CORRUGATED ALUMINUM ALLOY, OR CORRUGATED PLASTIC. PERFORATED PIPE WILL NOT BE ALLOWED.

BAGGED STONE SHALL REMAIN IN PLACE UNTIL THE ENGINEER DIRECTS THAT IT BE REMOVED. THE CONTRACTOR SHALL REMOVE AND DISPOSE OF SILT ACCUMULATIONS AT BAGGED STONE WHEN SO DIRECTED BY THE ENGINEER. BAGS SHALL BE REMOVED AND REPLACED WHENEVER THE ENGINEER DETERMINES THAT THEY HAVE DETERIORATED AND LOST THEIR EFFECTIVENESS.

NO SEPARATE PAYMENT WILL BE MADE FOR THIS WORK AND THE ENTIRE COST OF THIS WORK SHALL BE INCLUDED IN THE UNIT CONTRACT PRICE BID FOR THE SEVERAL PAY ITEMS.

TEMPORARY DRAINAGE AT END BENT

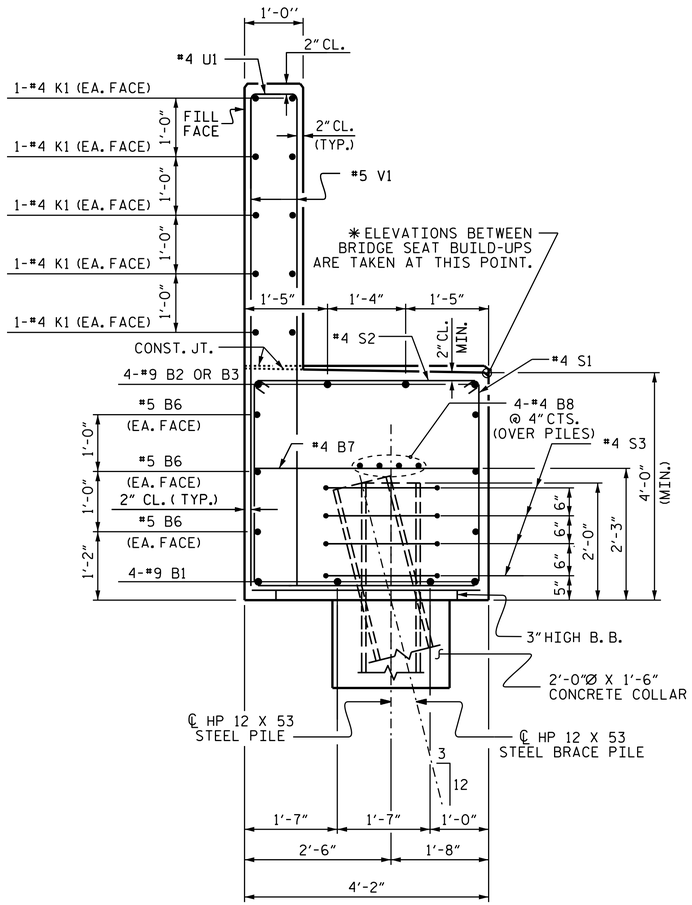

SECTION A-A

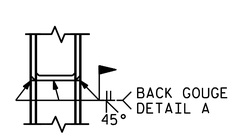

✱PILE VERTICAL

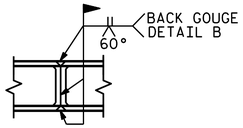

✱PILE HORIZONTAL OR VERTICAL

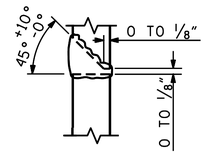

DETAIL A

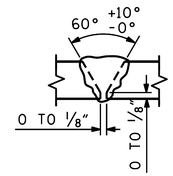

DETAIL B

✱POSITION OF PILE DURING WELDING.

PILE SPLICE DETAILS

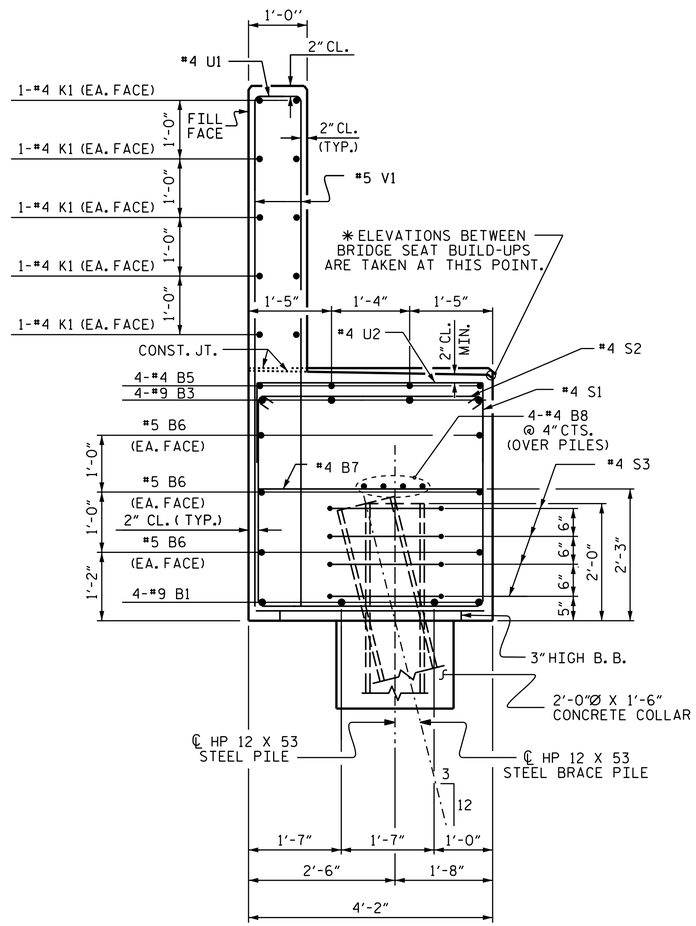

SECTION B-B

BAR TYPES

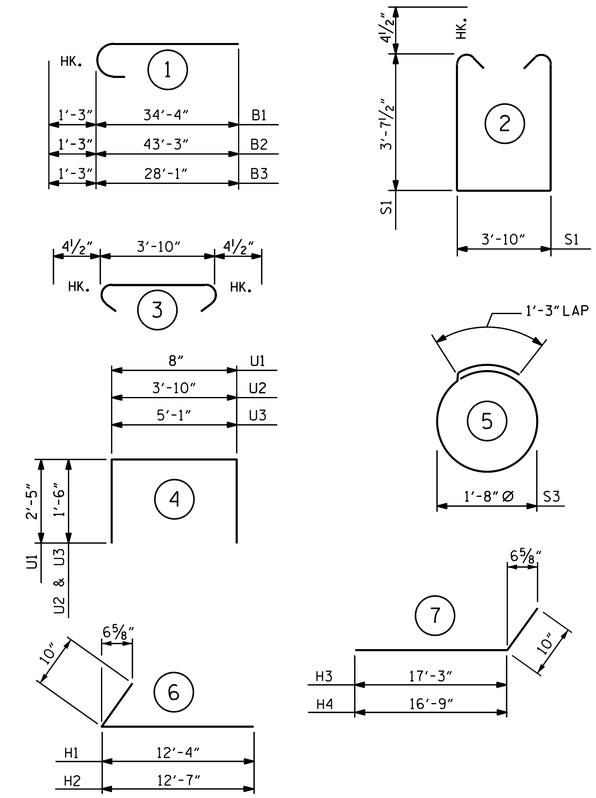

ALL BAR DIMENSIONS ARE OUT TO OUT.

BILL OF MATERIAL

END BENT No. 1

BAR	NO.	SIZE	TYPE	LENGTH	WEIGHT
B1	8	#9	1	35'-7"	968
B2	4	#9	1	44'-6"	605
B3	4	#9	1	29'-4"	399
B4	4	#4	STR.	11'-2"	30
B5	16	#4	STR.	2'-7"	28
B6	12	#5	STR.	32'-10"	411
B7	15	#4	STR.	3'-10"	38
B8	12	#4	STR.	22'-5"	180
H1	21	#6	6	13'-2"	415
H2	21	#6	6	13'-5"	423
H3	12	#5	7	18'-1"	226
H4	12	#5	7	18'-1"	220
K1	30	#4	STR.	22'-6"	451
K2	4	#4	STR.	3'-2"	8
K3	4	#4	STR.	3'-5"	9
S1	84	#4	2	11'-10"	664
S2	84	#4	3	4'-7"	257
S3	28	#4	5	6'-6"	122
S4	3	#6	8	5'-4"	24
S5	3	#6	9	10'-1"	45
U1	55	#4	4	5'-6"	202
U2	19	#4	4	6'-10"	87
U3	1	#4	4	8'-1"	5
V1	110	#5	STR.	8'-4"	955
V2	32	#5	STR.	10'-3"	342
V3	40	#5	STR.	9'-10"	410

REINFORCING STEEL = 7,524 LBS.

CLASS A CONCRETE BREAKDOWN

POUR #1
CAP, COLLARS, LOWER PART OF WINGS & BRACE PILE BLOCK 48.3 C.Y.

POUR #2
BACKWALL & UPPER PART OF WINGS 19.0 C.Y.

CLASS A CONCRETE TOTAL 67.3 C.Y.

HP 12 X 53 STEEL PILES

NO. 8 120 LIN. FT.

STEEL PILE POINTS EA. 8

PROJECT NO. B-3673
McDOWELL COUNTY
STATION: 29+38.00 -L-

SHEET 3 OF 3

STATE OF NORTH CAROLINA
DEPARTMENT OF TRANSPORTATION
RALEIGH

SUBSTRUCTURE

END BENT No. 1

NORTH CAROLINA PROFESSIONAL SEAL 17230 ENGINEER WAEL S. ARAFAT

DocuSigned by: Wael Arafat
4139C12A32AB406...

2/24/2015

REVISIONS								SHEET NO.
NO.	BY:	DATE:	NO.	BY:	DATE:			S-30
1			3					TOTAL SHEETS
2			4					43

DRAWN BY : V.X. NGUYEN DATE : 11-20-14
CHECKED BY : W.J. HARRIS DATE : 12-22-14
DESIGN ENGINEER OF RECORD: A.M. LEE DATE : 1-11-15

24-FEB-2015 08:35
R:\Structures\Plans\FinalPlans\B-3673_SD_E*1.dgn
warafat