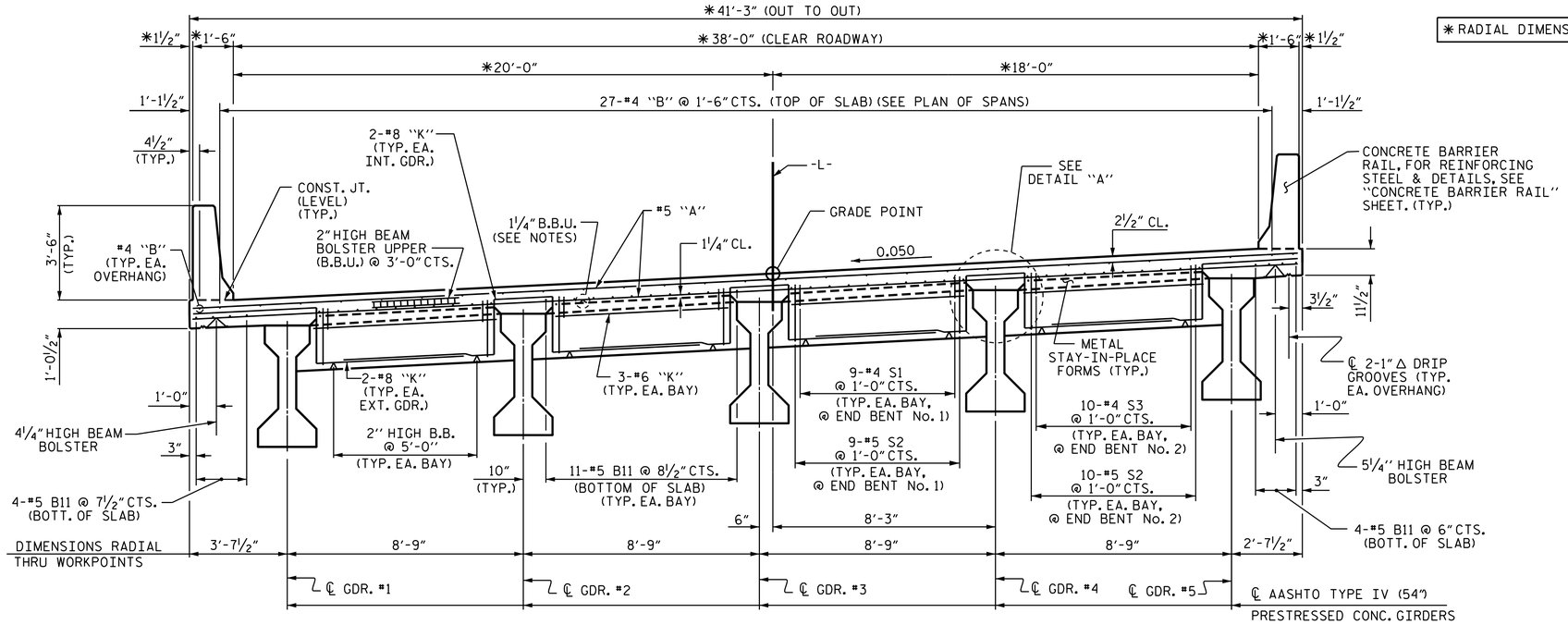

TYPICAL SECTION

(SHOWING END BENT DIAPHRAGMS)

✱ RADIAL DIMENSIONS

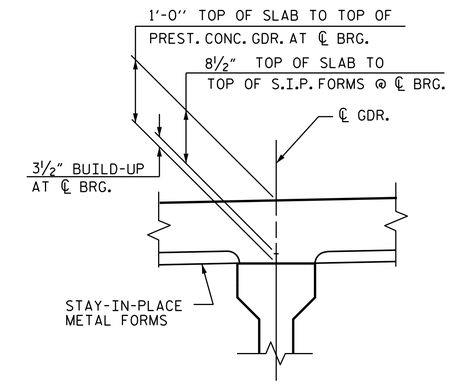

DETAIL "A"

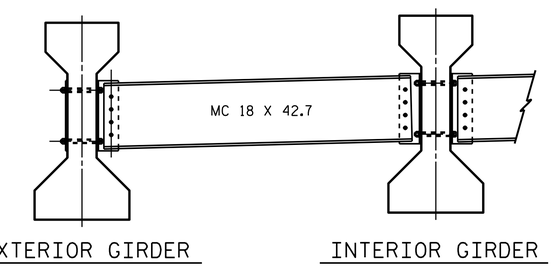

PART TYPICAL SECTION

(SHOWING INTERMEDIATE DIAPHRAGMS)
(FOR DETAILS, SEE "INTERMEDIATE STEEL DIAPHRAGMS FOR TYPE IV PRESTRESSED CONCRETE GIRDERS" SHEET)

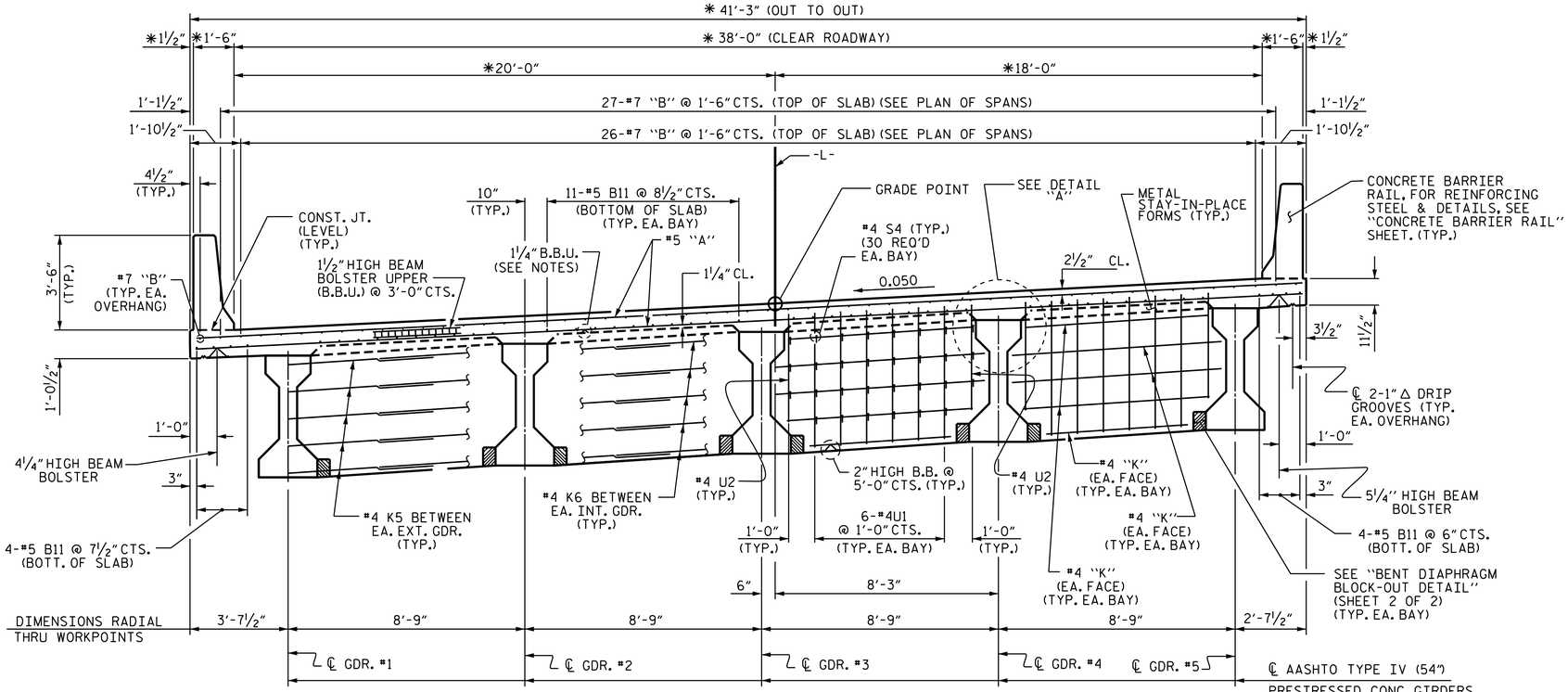

TYPICAL SECTION

(SHOWING CONTINUOUS BENT DIAPHRAGMS)

PROJECT NO. B-3673
McDOWELL COUNTY
STATION: 29+38.00 -L-

SHEET 1 OF 2

STATE OF NORTH CAROLINA
DEPARTMENT OF TRANSPORTATION
RALEIGH

SUPERSTRUCTURE
TYPICAL SECTION

NORTH CAROLINA PROFESSIONAL SEAL 17230 ENGINEER WAEL S. ARAFAT

DocuSigned by: Wael Arafat 4139C12A32AB406...
2/24/2015

REVISIONS								SHEET NO.
NO.	BY:	DATE:	NO.	BY:	DATE:			S-6
1			3					TOTAL SHEETS
2			4					43

DRAWN BY : V.X. NGUYEN DATE : 8-28-14
CHECKED BY : D. HODGE DATE : 11-14
DESIGN ENGINEER OF RECORD: A.M. LEE DATE : 1-14-15

23-FEB-2015 16:59
R:\Structures\Plans\Final Plans\B-3673_SD_TS.dgn
warafat