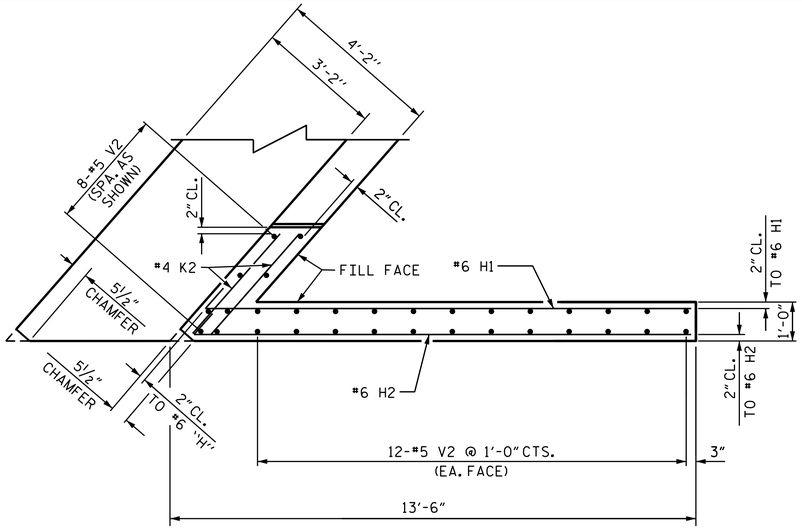

PLAN OF WING - W1

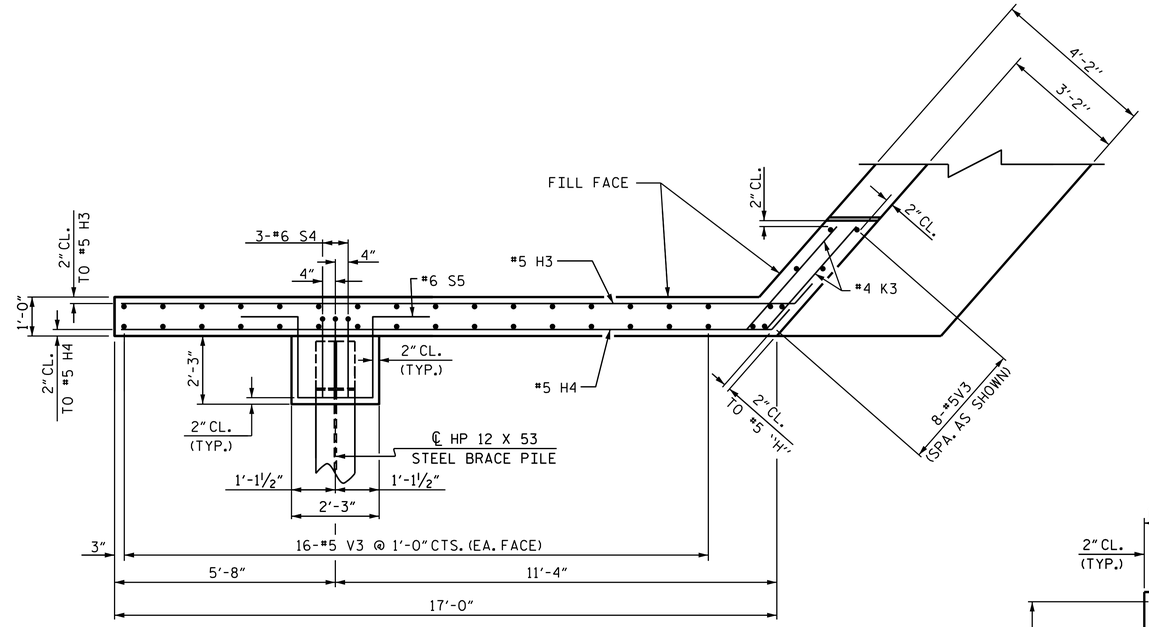

PLAN OF WING - W2

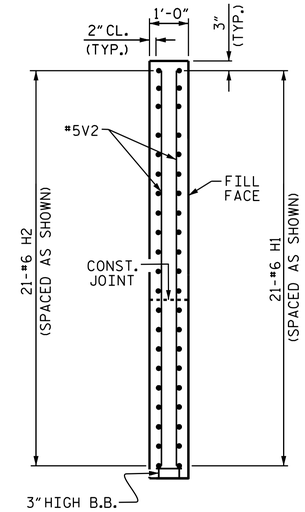

SECTION X-X

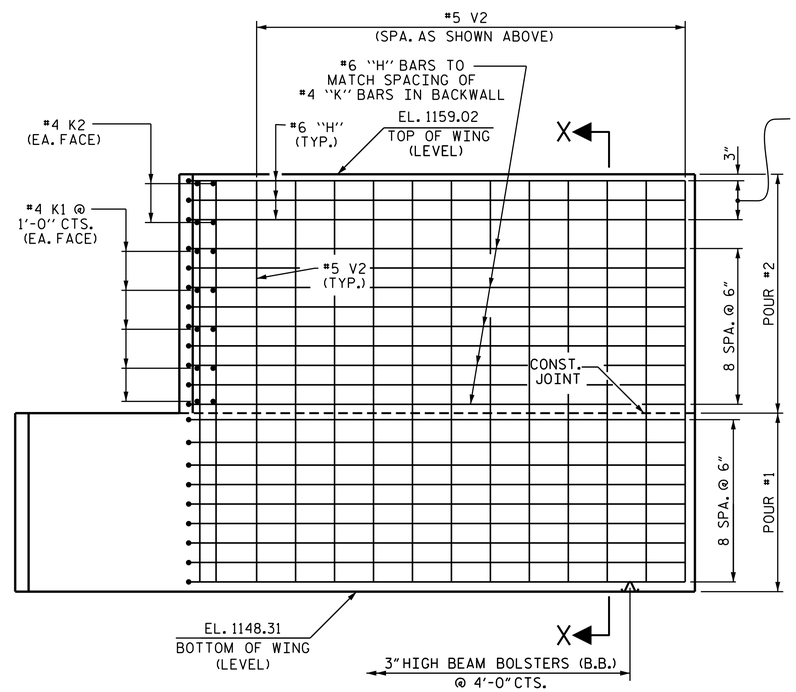

ELEVATION OF WING - W1

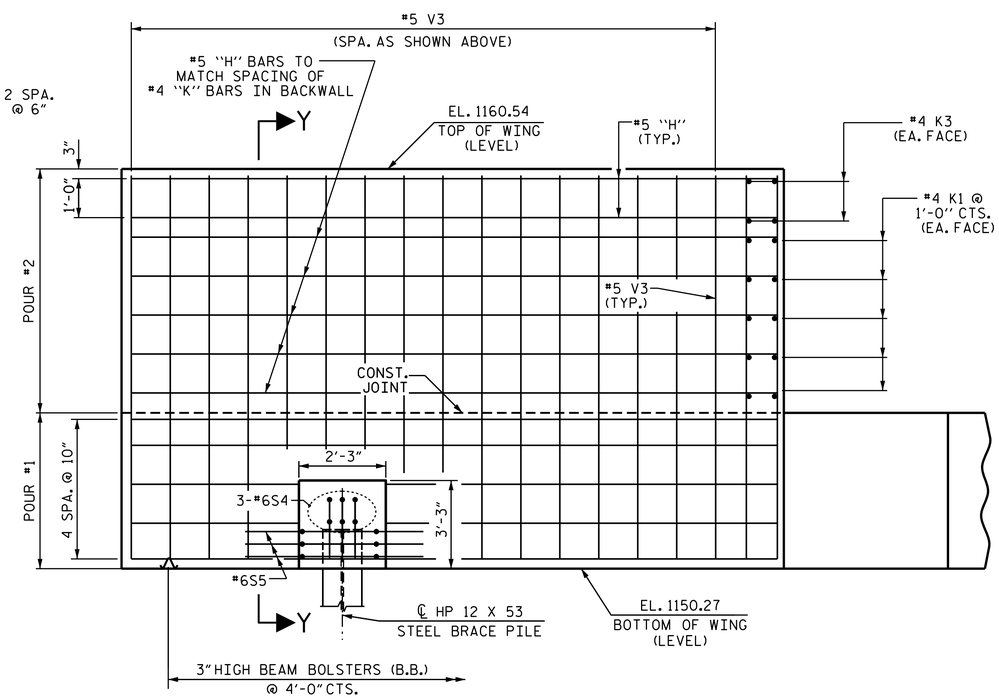

ELEVATION OF WING - W2

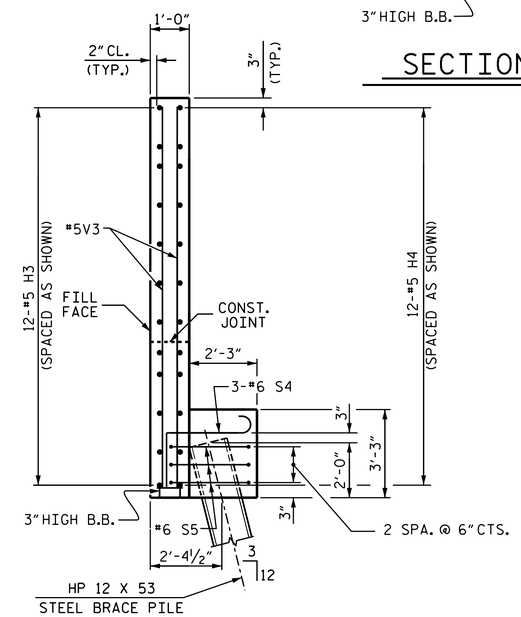

SECTION Y-Y

PROJECT NO. B-3673

McDOWELL COUNTY

STATION: 29+38.00 -L-

SHEET 2 OF 3

STATE OF NORTH CAROLINA
DEPARTMENT OF TRANSPORTATION
RALEIGH

SUBSTRUCTURE

END BENT No. 1

NORTH CAROLINA PROFESSIONAL SEAL 17230 ENGINEER WAEL S. ARAFAT

DocuSigned by: Wael Arafat 4139C12A32AB406...

2/24/2015

REVISIONS						SHEET NO.
NO.	BY:	DATE:	NO.	BY:	DATE:	S-29
1			3			TOTAL SHEETS
2			4			43

DRAWN BY : V.X. NGUYEN DATE : 11-18-14
CHECKED BY : W.J. HARRIS DATE : 12-22-14
DESIGN ENGINEER OF RECORD: A.M. LEE DATE : 1-11-15

24-FEB-2015 08:34
R:\Structures\Plans\FinalPlans\B-3673_SD_E*1.dgn
warafat