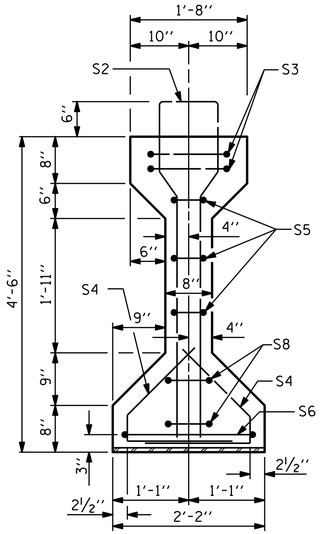

SECTION A-A

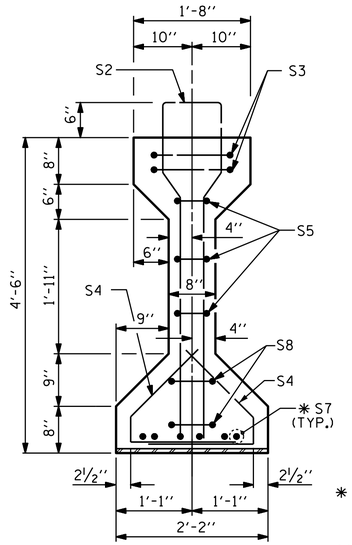

SECTION B-B

✱ FOR S7 BARS, SEE DETAIL "A" OF PRESTRESSED CONCRETE GIRDER CONTINUOUS FOR LIVE LOAD DETAILS SHEET (SHEET 5 OF 7)

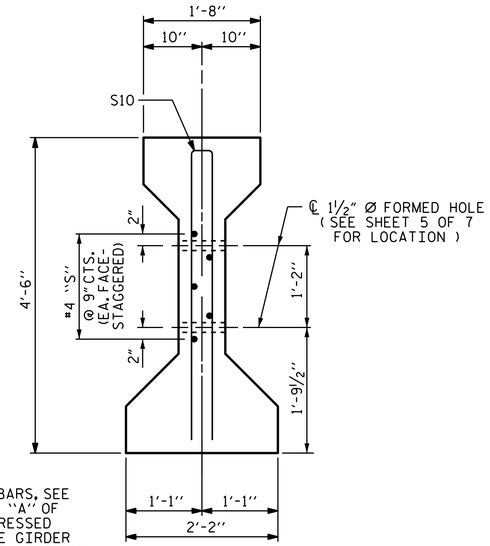

SECTION C-C

(S1 BARS NOT SHOWN)

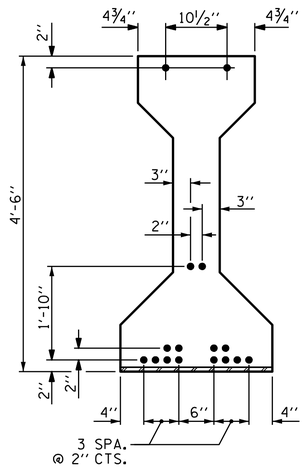

AT END OF GIRDER

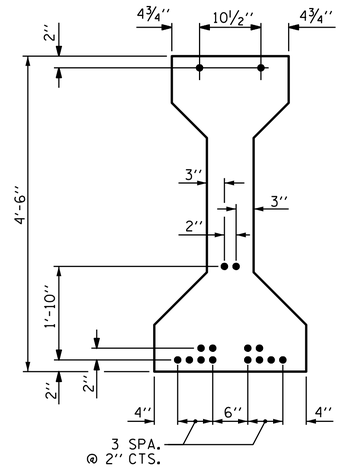

AT ℄ OF GIRDER

0.6" Ø LOW RELAXATION STRAND LAYOUT

16 STRANDS REQUIRED

0.6" Ø L. R. GRADE 270 STRANDS

AREA (SQUARE INCHES)	ULTIMATE STRENGTH (LBS. PER STRAND)	APPLIED PRESTRESS (LBS. PER STRAND)
0.217	58,600	43,950

REINFORCING STEEL FOR ONE GIRDER

	BAR	NUMBER	SIZE	TYPE	LENGTH	WEIGHT
	S1	47	#4	1	10'-8"	335
	S2	12	#6	1	10'-8"	192
	S3	4	#4	2	9'-1"	24
	S4	64	#4	3	3'-5"	146
	S5	6	#4	2	8'-5"	34
	S6	1	#4	2	9'-11"	7
	✱ S7	6	#5	STR	3'-8"	23
	S8	4	#4	2	8'-7"	23
	S9	1	#3	STR	1'-10"	1
EXTERIOR GDR.	S10	2	#5	2	8'-8"	18
INTERIOR GDR.	S10	4	#5	2	8'-8"	36
EXTERIOR GDR.	S11	5	#4	STR	7'-0"	23
INTERIOR GDR.	S12	5	#4	STR	14'-11"	50

✱ NOTE: S7 BARS SHALL BE BENT BEFORE SHIPMENT. HEAT BENDING SHALL NOT BE ALLOWED.

BAR TYPES

ALL BAR DIMENSIONS ARE OUT-TO-OUT

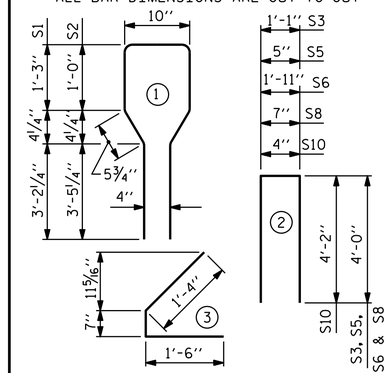

QUANTITIES FOR ONE GIRDER

	REINFORCING STEEL LB.	5000 PSI CONCRETE C.Y.	0.6" Ø L.R. STRANDS No.
GIRDER A1	826	9.5	16
GIRDER A2	871	9.5	16
GIRDER A3	871	9.4	16
GIRDER A4	871	9.4	16
GIRDER A5	826	9.4	16

GIRDERS REQUIRED

NUMBER	LENGTH	TOTAL LENGTH
5	VARIES	232'-8⅝"

TABLE OF DIMENSIONS

GDR.	X	Y	Z
A1	8⅜"	23'-4⅞"	46'-9¾"
A2	7 9/16"	23'-4 1/16"	46'-8⅛"
A3	6¾"	23'-3¼"	46'-6½"
A4	5 15/16"	23'-2 7/16"	46'-4⅞"
A5	5 3/16"	23'-1 11/16"	46'-3⅜"

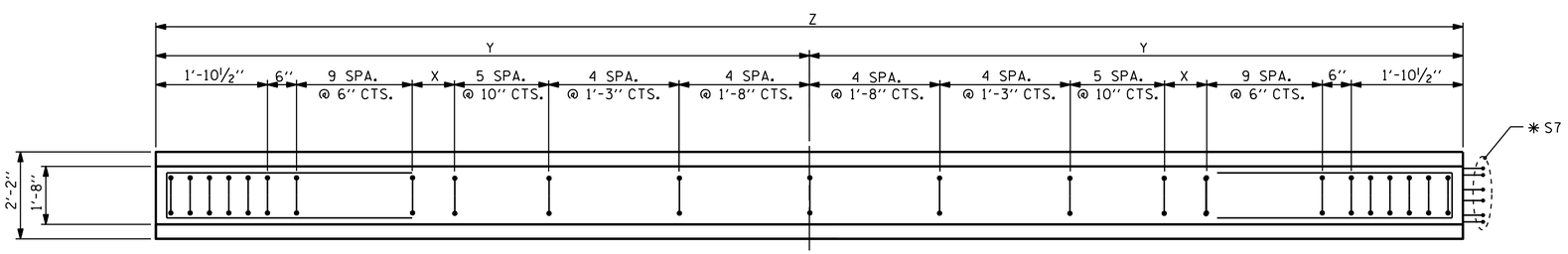

PLAN OF GIRDER

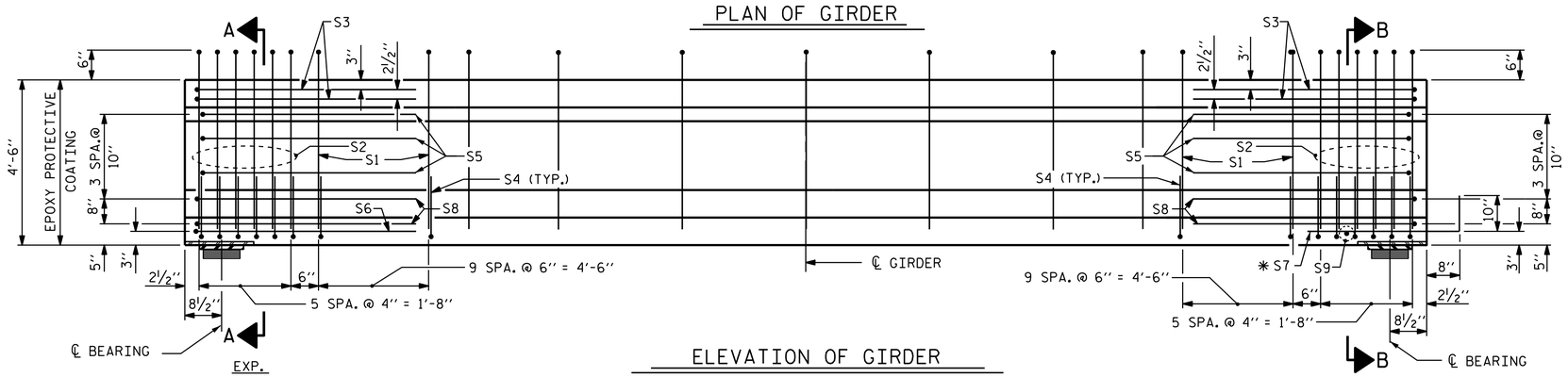

ELEVATION OF GIRDER

(SEE PARTIAL ELEVATION FOR ADDITIONAL "S" BARS)

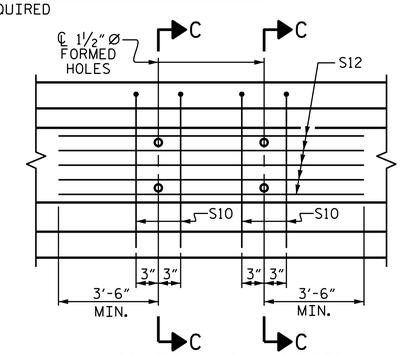

PARTIAL ELEVATION

SHOWING INTERMEDIATE DIAPHRAGM REINFORCING STEEL FOR GIRDERS A2, A3, & A4. FOR LOCATION OF BOLT HOLES IN GIRDERS, SEE SHEET 6 OF 7.

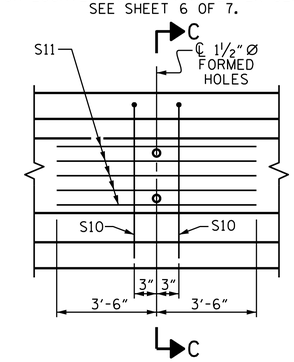

PARTIAL ELEVATION

SHOWING INTERMEDIATE DIAPHRAGM REINFORCING STEEL FOR GIRDERS A1 & A5. FOR LOCATION OF BOLT HOLES IN GIRDERS, SEE SHEET 6 OF 7.

NORTH CAROLINA PROFESSIONAL SEAL 17230 ENGINEER WAEL S. ARAFAT

DocuSigned by: Wael Arafat 2/24/2015

PROJECT NO. B-3673

McDOWELL COUNTY

STATION: 29+38.00 -L-

SHEET 1 OF 7

STATE OF NORTH CAROLINA
DEPARTMENT OF TRANSPORTATION
RALEIGH

STANDARD
AASHTO TYPE IV
PRESTRESSED CONCRETE GIRDER
CONTINUOUS FOR LIVE LOAD
SPAN A

REVISIONS						SHEET NO.
NO.	BY:	DATE:	NO.	BY:	DATE:	S-14
1			3			TOTAL SHEETS
2			4			43

ASSEMBLED BY : V.X. NGUYEN	DATE : 9-18-14		
CHECKED BY : D. HODGE	DATE : 12-14		
DRAWN BY : ELR 8/91	REV. 10/17/00R	RWW/LES	DESIGN ENGINEER OF RECORD:
CHECKED BY : GRP 8/91	REV. 5/1/06R	TLA/GM	J.P. McCARTHA DATE : 1-14-15
	REV. 10/1/11	MAA/GM	

23-FEB-2015 17:32
R:\Structures\Plans\Final Plans\B-3673_SD_G*.dgn
warafat

STD. NO. PCG6 (Sht. 1)