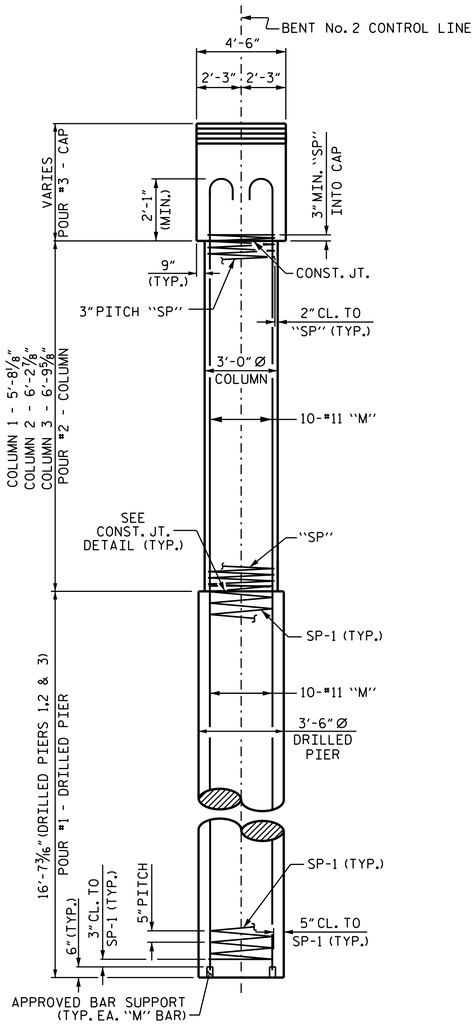

END ELEVATION

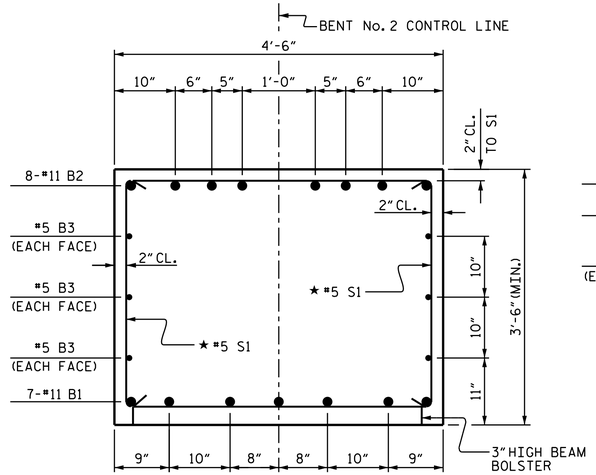

SECTION A-A

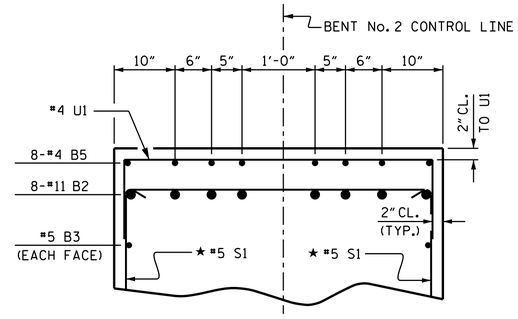

PARTIAL SECTION B-B

★ INVERT ALTERNATE STIRRUPS

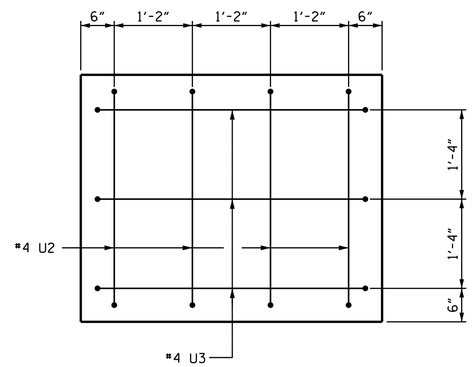

VIEW X-X

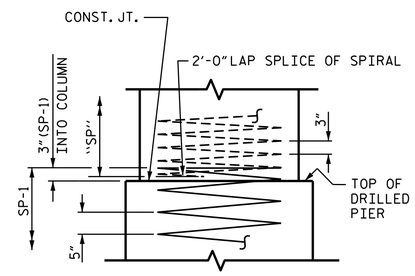

CONSTRUCTION JOINT DETAIL

BAR TYPES

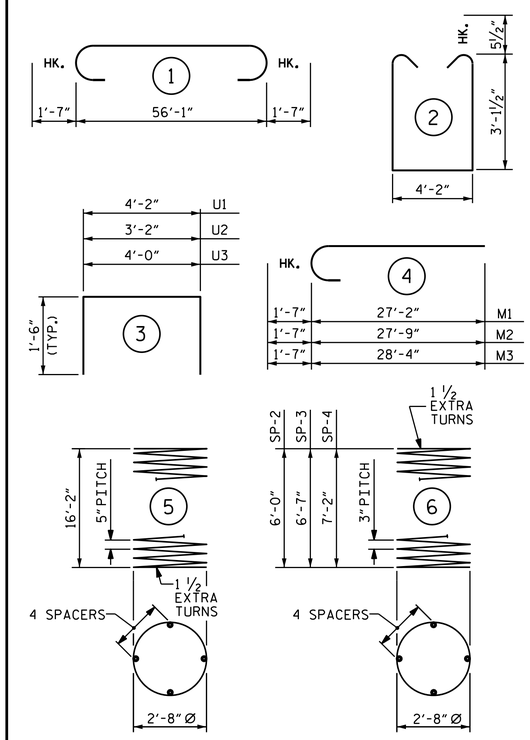

ALL BAR DIMENSIONS ARE OUT TO OUT.

BILL OF MATERIAL

BENT No. 2

BAR	NO.	SIZE	TYPE	LENGTH	WEIGHT
B1	7	#11	STR	56'-3"	2,092
B2	8	#11	1	59'-3"	2,518
B3	6	#5	STR	56'-3"	352
B4	8	#4	STR	5'-9"	31
B5	24	#4	STR	5'-4"	86
B6	8	#4	STR	5'-11"	32
M1	10	#11	4	28'-9"	1,527
M2	10	#11	4	29'-4"	1,558
M3	10	#11	4	29'-11"	1,589
S1	66	#5	2	11'-4"	780
U1	51	#4	3	7'-2"	244
U2	8	#4	3	6'-1"	33
U3	6	#4	3	7'-0"	28
REINFORCING STEEL FOR BENT No. 2					10,870 LBS.
SP-1	3	✱	5	337'-3"	1,055
SP-2	1	✱✱	6	214'-7"	143
SP-3	1	✱✱	6	231'-1"	154
SP-4	1	✱✱	6	255'-10"	171
SPIRAL COLUMN REINFORCING STEEL					1,523 LBS.

CLASS A CONCRETE BREAKDOWN

POUR #2 (COLUMNS)	6.5 C.Y.
POUR #3 (CAP)	34.8 C.Y.
TOTAL CLASS A CONCRETE	41.3 C.Y.

DRILLED PIERS QUANTITIES:

DRILLED PIER CONCRETE

POUR #1 (DRILLED PIERS)	17.7 C.Y.
3'-6" Ø DRILLED PIERS IN SOIL	11.80 LIN. FT.
3'-6" Ø DRILLED PIERS NOT IN SOIL	38.00 LIN. FT.
PERMANENT STEEL CASING FOR 3'-6" Ø DRILLED PIERS	18.30 LIN. FT.
CSL TUBES	218 LIN. FT.

✱ THE SP-1 SPIRAL REINFORCING STEEL SHALL BE W31 OR D-31 COLD DRAWN WIRE OR #5 PLAIN OR DEFORMED BAR.

✱✱ THE SP-2 THRU SP-4 SPIRAL REINFORCING STEEL SHALL BE W20 OR D-20 COLD DRAWN WIRE OR #4 PLAIN OR DEFORMED BAR.

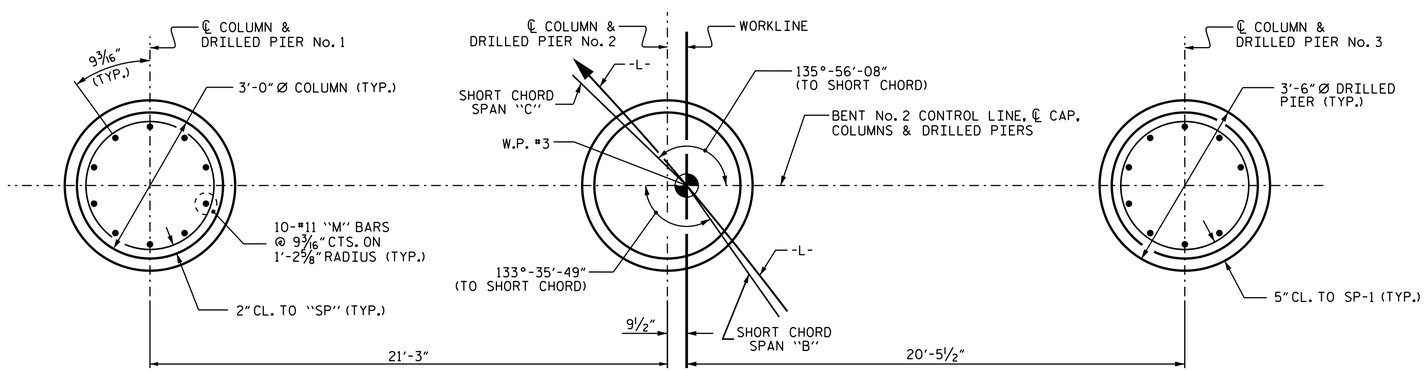

PLAN OF DRILLED PIERS & COLUMNS

(REINFORCING STEEL IS TYPICAL FOR EACH COLUMN & DRILLED PIER)

PROJECT NO. B-3673

MCDOWELL COUNTY

STATION: 29+38.00 -L-

SHEET 2 OF 2

STATE OF NORTH CAROLINA
DEPARTMENT OF TRANSPORTATION
RALEIGH

SUBSTRUCTURE

BENT No. 2

NORTH CAROLINA PROFESSIONAL SEAL 17230 ENGINEER WAEL S. ARAFAT

DocuSigned by: Wael Arafat 4139C12A32AB406...

2/24/2015

REVISIONS						SHEET NO.
NO.	BY:	DATE:	NO.	BY:	DATE:	S-34
1			3			TOTAL SHEETS
2			4			43

DRAWN BY : R.P. PATEL DATE : 3-20-14

CHECKED BY : B. N. BARODAWALA DATE : 1-6-15

DESIGN ENGINEER OF RECORD: J. P. MCCARTHA DATE : 1-21-15

24-FEB-2015 09:12
R:\Structures\Plans\FinalPlans\B-3673_SD_B*2.dgn
warafat