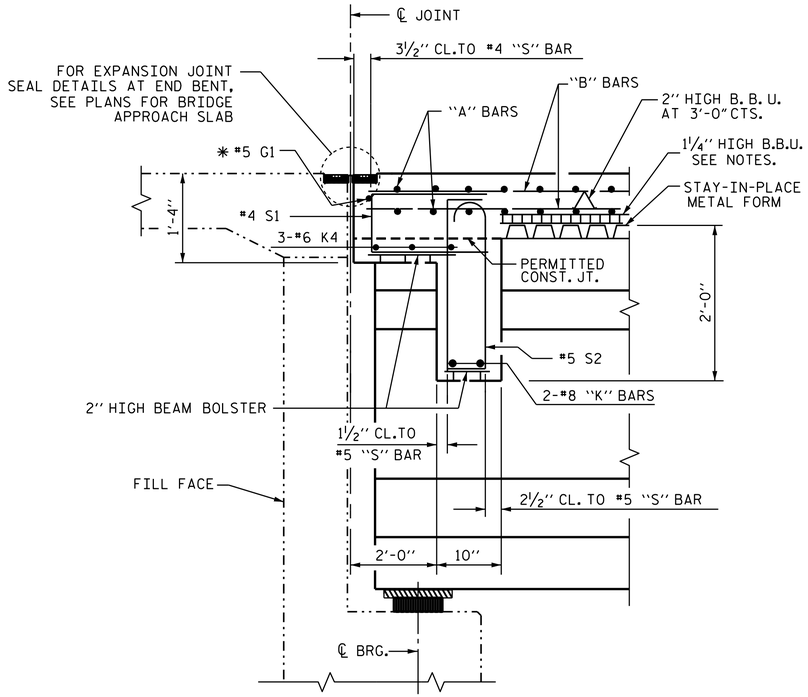

✱ #5 G1 BAR MAY BE SHIFTED SLIGHTLY. AS NECCESSARY, TO CLEAR REINFORCING STEEL AND STIRRUPS.

SECTION THRU END BENT No. 1

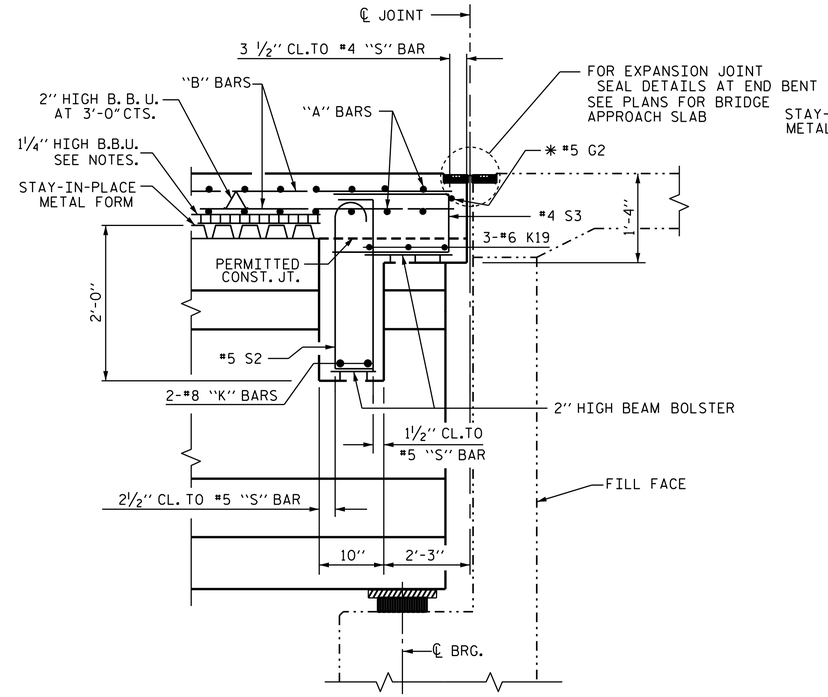

✱ #5 G2 BAR MAY BE SHIFTED SLIGHTLY. AS NECCESSARY, TO CLEAR REINFORCING STEEL AND STIRRUPS.

SECTION THRU END BENT No. 2

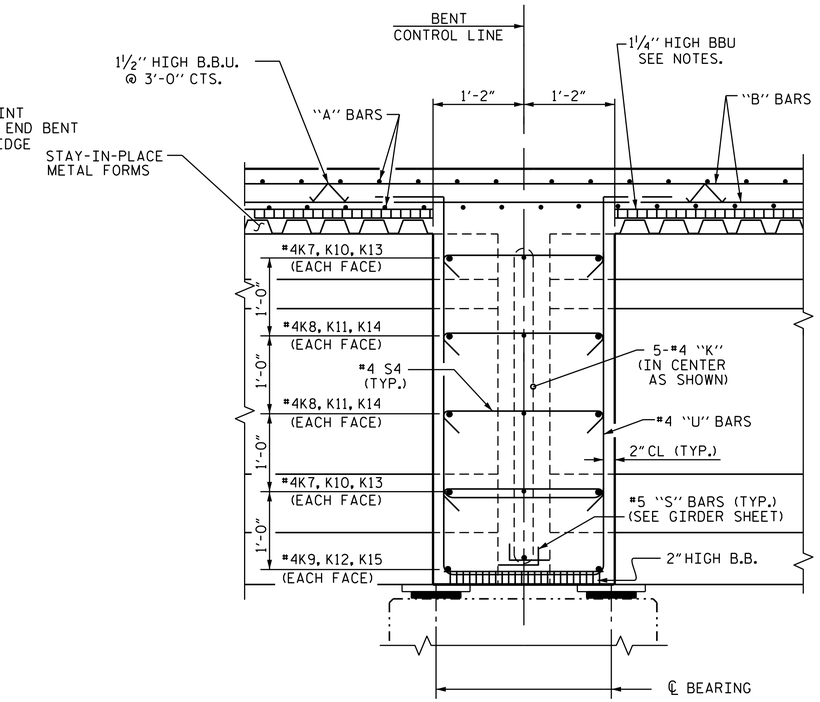

SECTION THRU BENT DIAPHRAGM

NOTES

PROVIDE 1¼" HIGH BEAM BOLSTERS UPPER AT 4'-0" CTS. ATOP THE METAL STAY-IN-PLACE FORMS TO SUPPORT THE BOTTOM MAT OF 'A' BARS. WHEN USING REMOVABLE FORMS, PROVIDE CONTINUOUS HIGH CHAIRS FOR METAL DECK (C.H.C.M.) @ 4'-0" CTS. WITH A HEIGHT TO SUPPORT THE BOTTOM MAT OF 'A' BARS A CLEAR DISTANCE OF 2½" ABOVE THE TOP OF THE REMOVABLE FORM.

LONGITUDINAL STEEL MAY BE SHIFTED SLIGHTLY, AS NECESSARY, TO AVOID INTERFERENCE WITH STIRRUPS IN PRESTRESSED CONCRETE GIRDERS.

PREVIOUSLY CAST CONCRETE IN A CONTINUOUS UNIT SHALL HAVE ATTAINED A MINIMUM COMPRESSIVE STRENGTH OF 3,000 PSI BEFORE ADDITIONAL CONCRETE IS CAST IN THE UNIT.

BARRIER RAIL IN A CONTINUOUS UNIT SHALL NOT BE CAST UNTIL ALL SLAB CONCRETE IN THE UNIT HAS BEEN CAST AND HAS REACHED A MINIMUM COMPRESSIVE STRENGTH OF 3,000 PSI.

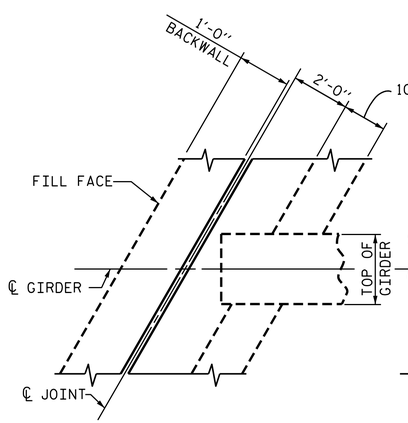

PLAN OF END BENT No. 1 DIAPHRAGM

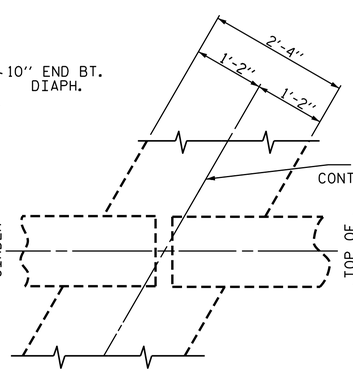

PLAN OF BENT DIAPHRAGM

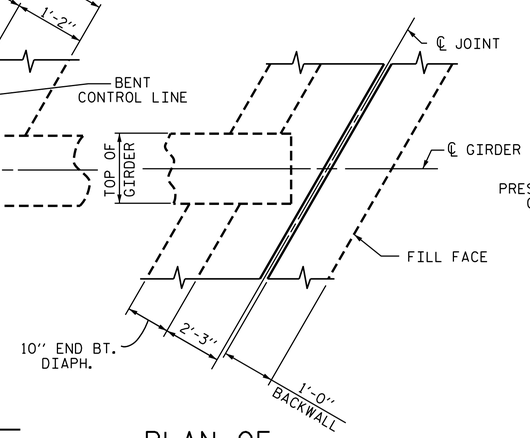

PLAN OF END BENT No. 2 DIAPHRAGM

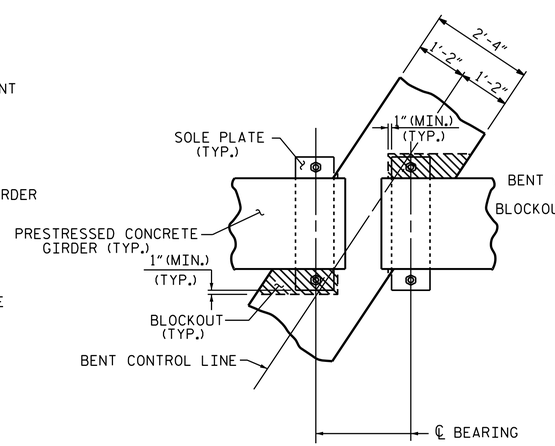

PLAN

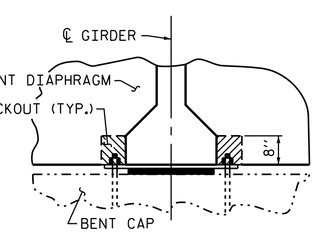

SECTION

BENT DIAPHRAGM BLOCK-OUT DETAIL

NORTH CAROLINA PROFESSIONAL SEAL 17230 ENGINEER WAEL S. ARAFAT

2/24/2015

DocuSigned by: Wael Arafat 4139C12A32AB406...

PROJECT NO. B-3673

McDOWELL COUNTY

STATION: 29+38.00 -L-

SHEET 2 OF 2

STATE OF NORTH CAROLINA
DEPARTMENT OF TRANSPORTATION
RALEIGH

SUPERSTRUCTURE

TYPICAL SECTION DETAILS

REVISIONS						SHEET NO.
NO.	BY:	DATE:	NO.	BY:	DATE:	S-7
1			3			TOTAL SHEETS
2			4			43

DRAWN BY : V.X. NGUYEN DATE : 8-28-14
CHECKED BY : D. HODGE DATE : 11-14
DESIGN ENGINEER OF RECORD: A.M. LEE DATE : 1-14-15

23-FEB-2015 17:01
R:\Structures\Plans\Final Plans\B-3673_SD_TS.dgn
warafat