TIP NO.	SHEET NO.
K-4908	PMP-1

APPROVED: DocuSigned by: Scott Clark D22FB20CCE9F457...

DATE: 12/18/2014

SEAL

NORTH CAROLINA PROFESSIONAL SEAL 024416 ENGINEER M. SCOTT CLARK

STATE OF NORTH CAROLINA
DEPARTMENT OF TRANSPORTATION

PAVEMENT MARKING PLAN
IREDELL COUNTIES

LOCATION: I–77 REST AREA ON NEW LOCATION

TYPE OF WORK: GRADING, DRAINAGE, PAVING, TRAFFIC CONTROL, SIGNING, LIGHTING, REST AREA AND FACILITIES

T.I.P.: K–4908

CONTRACT: C203566

INDEX

SHEET NO.	DESCRIPTION
PMP-1	PAVEMENT MARKING PLAN TITLE SHEET
PMP-2	PAVEMENT MARKING LEGEND, SCHEDULE, AND DETAILS
PMP-3 THRU PMP-9	PAVEMENT MARKING PLAN SHEETS

ROADWAY STANDARD DRAWING

THE FOLLOWING ROADWAY STANDARDS AS APPEAR IN "ROADWAY STANDARD DRAWINGS" - PROJECT SERVICES UNIT - N.C. DEPARTMENT OF TRANSPORTATION - RALEIGH, N.C., DATED JANUARY 2012 ARE APPLICABLE TO THIS PROJECT AND BY REFERENCE HEREBY ARE CONSIDERED A PART OF THESE PLANS:

STD. NO.	TITLE
1205.01	PAVEMENT MARKINGS - LINE TYPES AND OFFSETS
1205.02	PAVEMENT MARKINGS - TWO-LANE AND MULTILANE ROADWAYS
1205.03	PAVEMENT MARKINGS - EXIT AND ENTRANCE RAMPS
1205.04	PAVEMENT MARKINGS - INTERSECTIONS
1205.08	PAVEMENT MARKINGS - SYMBOLS AND WORD MESSAGES
1205.09	PAVEMENT MARKINGS - PAINTED ISLANDS
1250.01	RAISED PAVEMENT MARKERS - INSTALLATION SPACING
1251.01	RAISED PAVEMENT MARKERS - PERMANENT AND TEMPORARY
1253.01	RAISED PAVEMENT MARKERS - SNOWPLOWABLE
1205.07	PAVEMENT MARKINGS - PEDESTRIAN CROSSWALKS
1261.01	GUARDRAIL AND BARRIER DELINEATIONS - INSTALLATION SPACING
1261.02	GUARDRAIL AND BARRIER DELINEATIONS - TYPES AND MOUNTING
1262.01	GUARDRAIL END DELINEATION

GENERAL NOTES

THE FOLLOWING GENERAL NOTES APPLY AT ALL TIMES FOR THE DURATION OF THE CONSTRUCTION PROJECT, EXCEPT WHEN OTHERWISE NOTED IN THE PLAN, OR DIRECTED BY THE ENGINEER.

A) INSTALL PAVEMENT MARKINGS AND PAVEMENT MARKERS ON THE FINAL SURFACE AS FOLLOWS:

ROAD NAME	MARKING	MARKER
I-77 AND RAMPS	POLYUREA WITH HIGHLY REFLECTIVE ELEMENTS	SNOWPLOWABLE
REST AREA PARKING	PAINT AND THERMO	SNOWPLOWABLE

B) PLACE TWO APPLICATIONS OF PAINT PAVEMENT MARKINGS ON THE FINAL WEARING SURFACE. PLACE THE SECOND APPLICATION OF PAINT UPON SUFFICIENT DRYING TIME OF THE FIRST.

C) TIE PROPOSED PAVEMENT MARKING LINES TO EXISTING PAVEMENT MARKING LINES.

D) REMOVE/REPLACE ANY CONFLICTING/DAMAGED PAVEMENT MARKINGS AND MARKERS.

E) RAISED SNOWPLOWABLE MARKERS ARE TO BE USED FOR THIS PROJECT AND SPACED ACCORDING TO THE NCDOT ROADWAY STANDARD DRAWINGS.

F) UNLESS OTHERWISE SPECIFIED, HEATED-IN-PLACE THERMOPLASTIC MAY BE USED IN LIEU OF EXTRUDED THERMOPLASTIC FOR STOP BARS, SYMBOLS, CHARACTERS AND DIAGONALS. IF HEATED-IN-PLACE IS USED, IT SHALL BE PAID FOR USING THE EXTRUDED THERMOPLASTIC PAY ITEM.

G) SEE ROADWAY PLANS FOR ALTERNATE CURB RAMP DESIGNS WHEN INDICATED ON PAVEMENT MARKING DETAIL SHEETS.

PLAN REVIEWED BY: N.C.D.O.T. SIGNING AND DELINEATION UNIT

Kelvin L. Jordan SIGNING & DELINEATION REGIONAL ENGINEER

Jon Robert Navarrete SIGNING & DELINEATION PROJECT DESIGN ENGINEER

STATE OF NORTH CAROLINA DEPARTMENT OF TRANSPORTATION

PLAN PREPARED BY: DAVENPORT

John G. Townsend, PE PROJECT ENGINEER

M. Scott Clark, PE PROJECT DESIGN ENGINEER

DAVENPORT
TRANSPORTATION CONSULTING
HOME OFFICE:
305 WEST FOURTH STREET, SUITE 2A
WINSTON-SALEM, NC 27101
336.744.1636 www.davenportworld.com
NCBELS FIRM LICENSE NO. C-2522

$$$$SYSTIME$$$$
$$$$USERNAME$$$$ $$$$DGN$$$$

PROJECT REFERENCE NO.	SHEET NO.
K-4908	PMP-2

DocuSigned by:
Scott Clark
D22FB20CCE9F457...

1/26/2015

NORTH CAROLINA PROFESSIONAL SEAL 024416 ENGINEER M. SCOTT CLARK

PAVEMENT MARKING SCHEDULE

PAVEMENT MARKING LINES

---------- POLYUREA (4")
VA - WHITE EDGELINE
VB - YELLOW EDGELINE
V8 - 2 ft. - 6 ft./SP WHITE MINISKIP

---------- POLYUREA (6")
V6 - WHITE EDGELINE
V7 - YELLOW EDGELINE
VJ - 10 ft. WHITE SKIP
VK - 3 ft. - 9 ft./SP WHITE MINISKIP

----------POLYUREA (8")
VN - WHITE GORELINE

----------POLYUREA (12")
VS - WHITE GORELINE

----------THERMOPLASTIC (24", 120 MIL)
T3 - WHITE CROSSWALK LINE

----------PAINT (4")
PA - WHITE EDGELINE

----------PAINT (8")
PO - WHITE DIAGONAL

PAVEMENT MARKING SYMBOLS

--------- THERMOPLASTIC SYMBOLS (90 MIL)

UC - STRAIGHT ARROW

UH - HANDICAP PARKING

UP- MERGE ARROW

PAVEMENT MARKING PAY ITEMS

PAVEMENT MARKINGS LINES

PAY ITEM NO.	DESCRIPTION
4847000000-E	2 ft. - 6 ft./SP WHITE MINISKIP (4")
4847000000-E	WHITE EDGELINE (4")
4847000000-E	YELLOW EDGELINE (4")
4847100000-E	10 ft. WHITE SKIP (6")
4847100000-E	3 ft. - 9 ft./SP WHITE MINISKIP (6")
4847100000-E	WHITE EDGELINE (6")
4847100000-E	YELLOW EDGELINE (6")
4847110000-E	WHITE GORELINE (8")
4847120000-E	WHITE GORELINE (12")
4710000000-E	WHITE CROSSWALK LINE (24")
4810000000-E	WHITE EDGELINE (4")
4820000000-E	WHITE DIAGONAL (8")

PAVEMENT MARKING SYMBOLS

PAY ITEM NO.	DESCRIPTION
4725000000-E	STRIAGHT ARROW (90 MIL)
4725000000-E	MERGE ARROW (90 MIL)
4725000000-E	HANDICAP PARKING (90 MIL)

8/17/99

$$$$$$$$SYSTIME$$$$$$$$
$$$$$$$$$$$$$$$$$$$$$$$$$$$$$$$$
$$$$$$$$USERNAME$$$$$$$$

8/17/99

PROJECT REFERENCE NO.	SHEET NO.
K-4908	PMP-3

DocuSigned by:
Scott Clark
D22FB20CCE9F457...

12/18/2014

NORTH CAROLINA PROFESSIONAL SEAL 024416 ENGINEER M. SCOTT CLARK

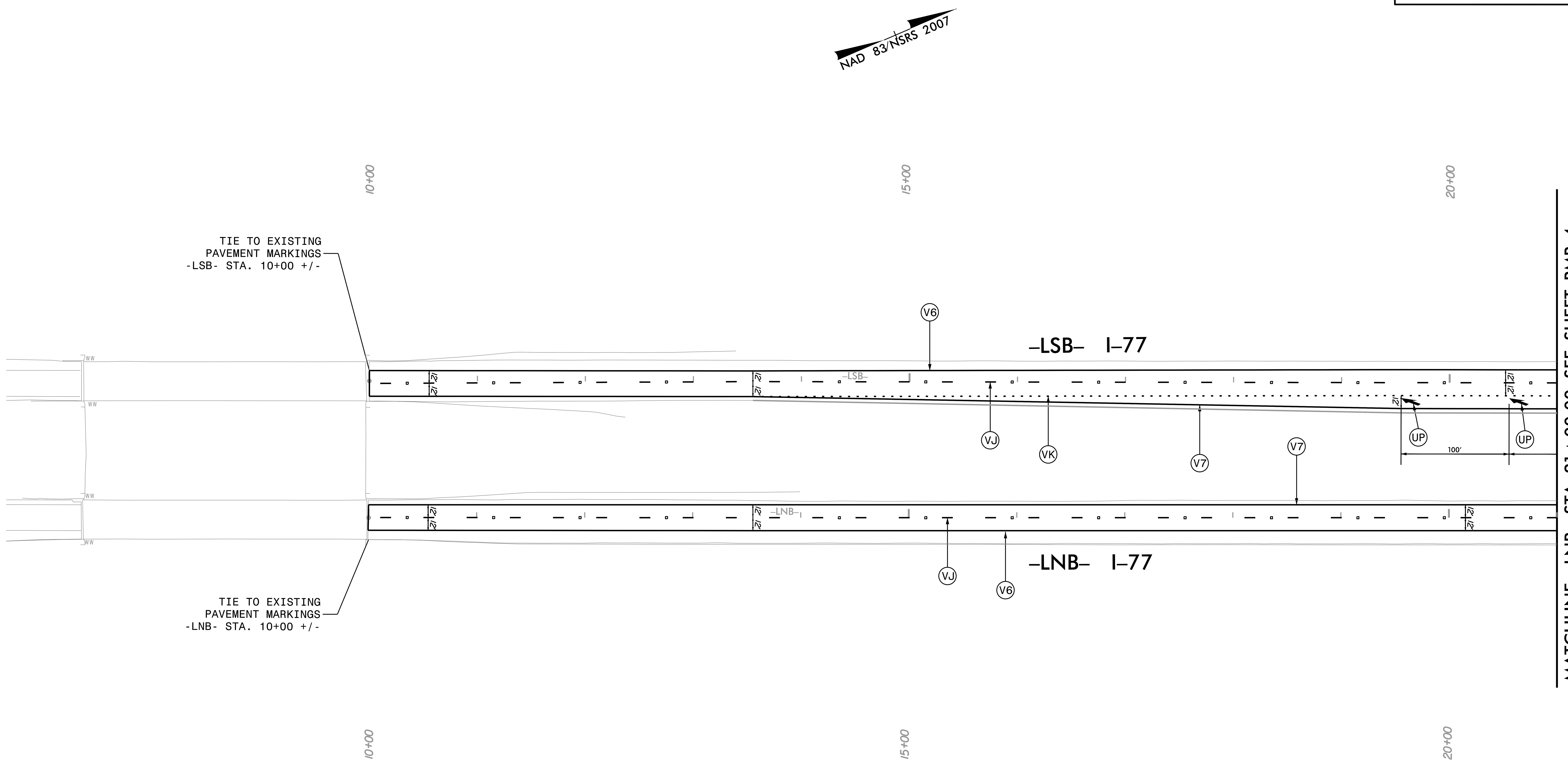

$$$$$$SYSTIME$$$$$
$$$$$$$$$$DGN$$$$$$$$$$$$$$$$$
$$$$USERNAME$$$$

PROJECT REFERENCE NO.	SHEET NO.
K-4908	PMP-4

DocuSigned by:
Scott Clark
D22FB20CCE9F457...
12/18/2014

NORTH CAROLINA PROFESSIONAL SEAL 024416 ENGINEER SCOTT CLARK

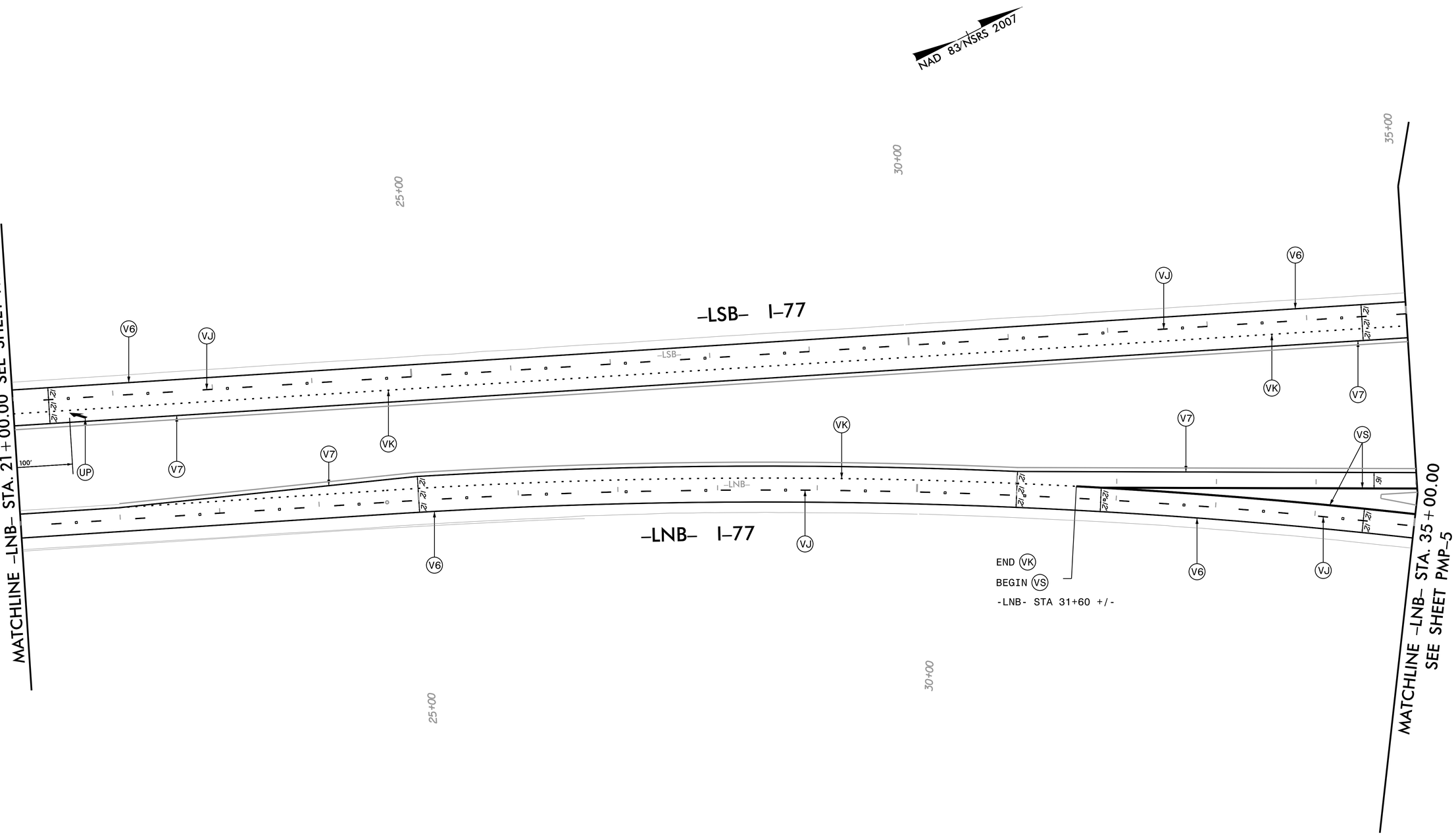

8/17/99

PROJECT REFERENCE NO.	SHEET NO.
K-4908	PMP-5

DocuSigned by:
Scott Clark
D22FB20CCE9F457...
12/18/2014

NORTH CAROLINA PROFESSIONAL SEAL 024416 ENGINEER SCOTT CLARK

NAD 83/NSRS 2007

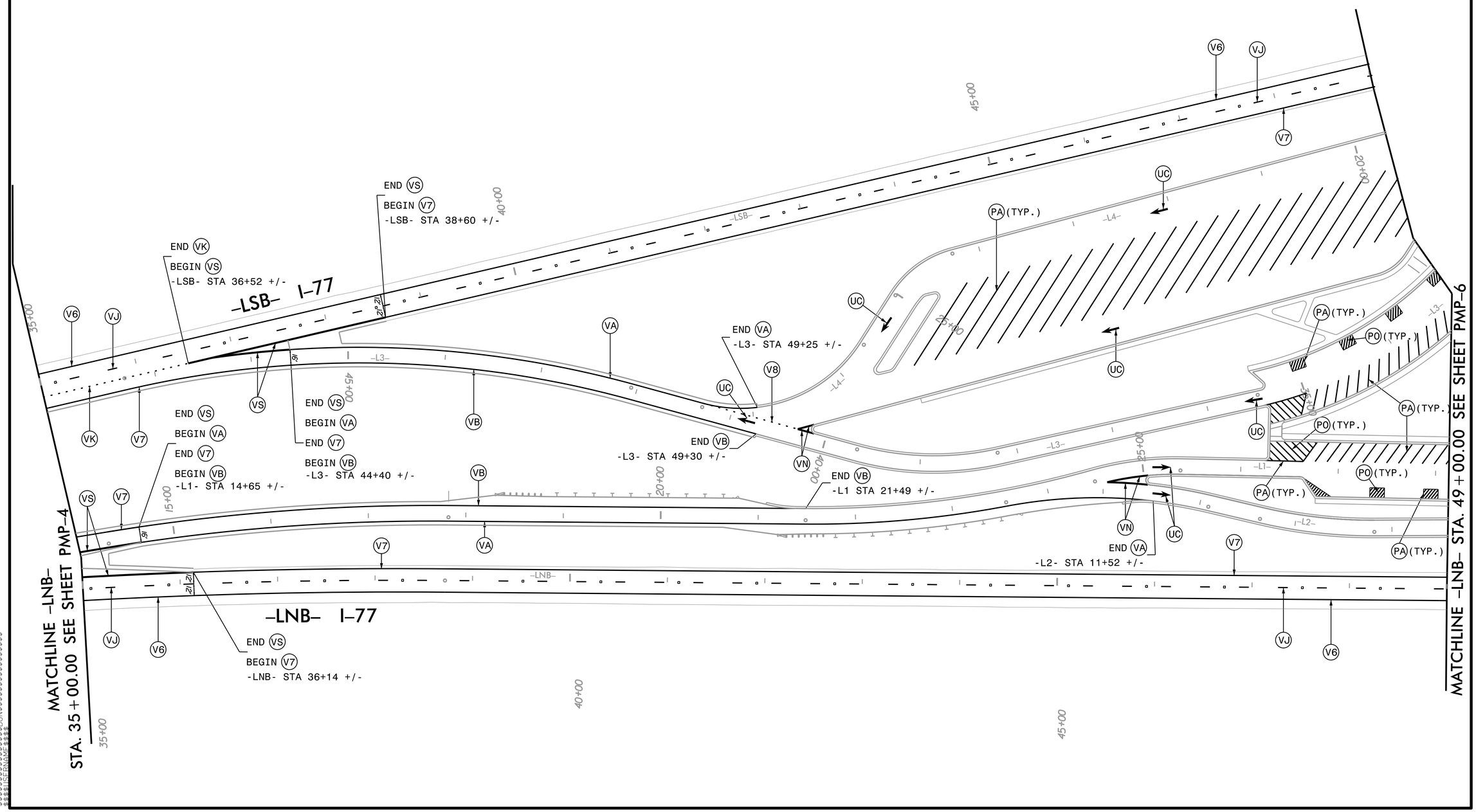

PROJECT REFERENCE NO.	SHEET NO.
K-4908	PMP-6

DocuSigned by:
Scott Clark
D22FB20CCE9F457...

NORTH CAROLINA PROFESSIONAL SEAL 024416 ENGINEER W. SCOTT CLARK

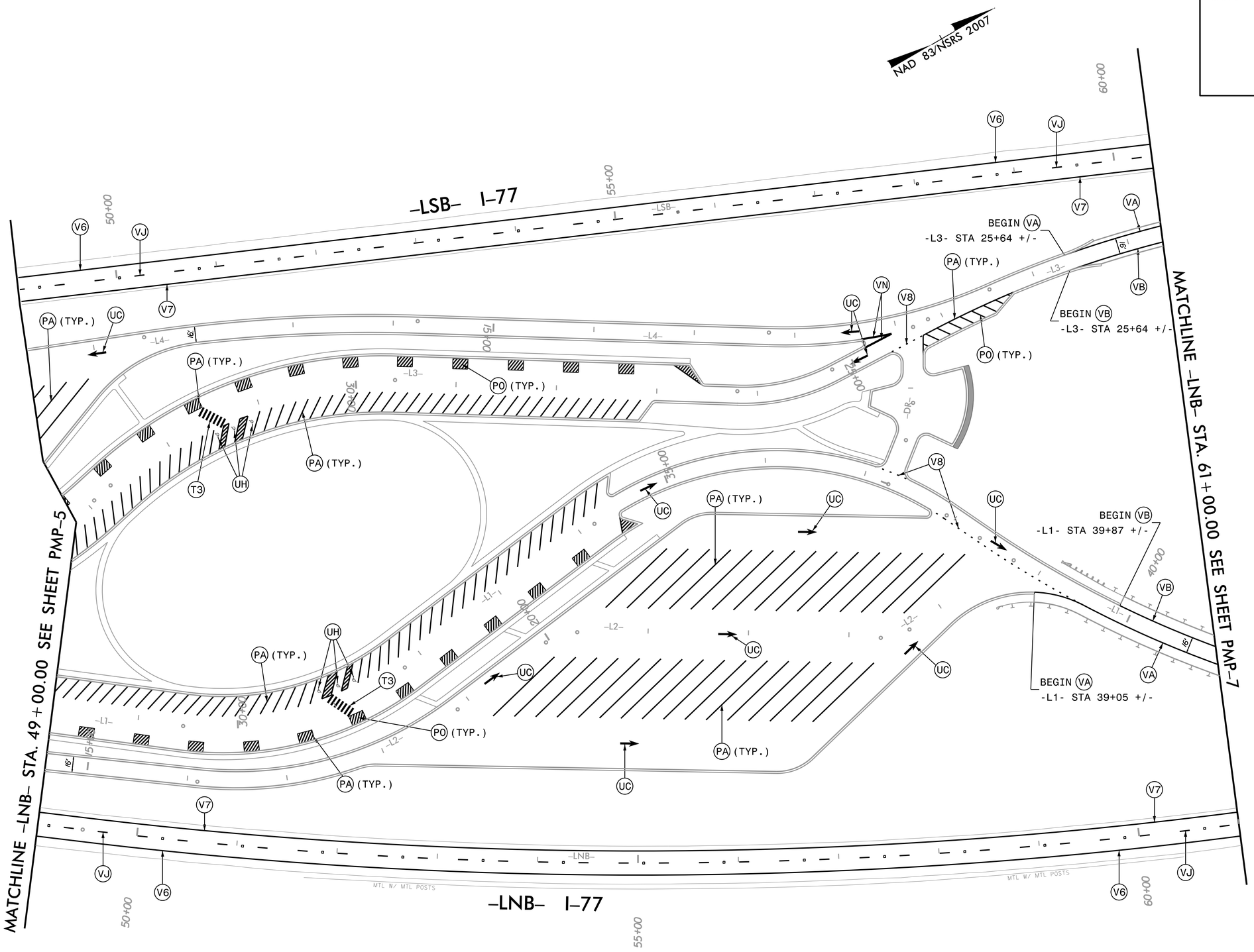

PROJECT REFERENCE NO.	SHEET NO.
K-4908	PMP-7

DocuSigned by:
Scott Clark
D22FB20CCE9F457...
12/18/2014

NORTH CAROLINA PROFESSIONAL SEAL 024416 ENGINEER SCOTT CLARK

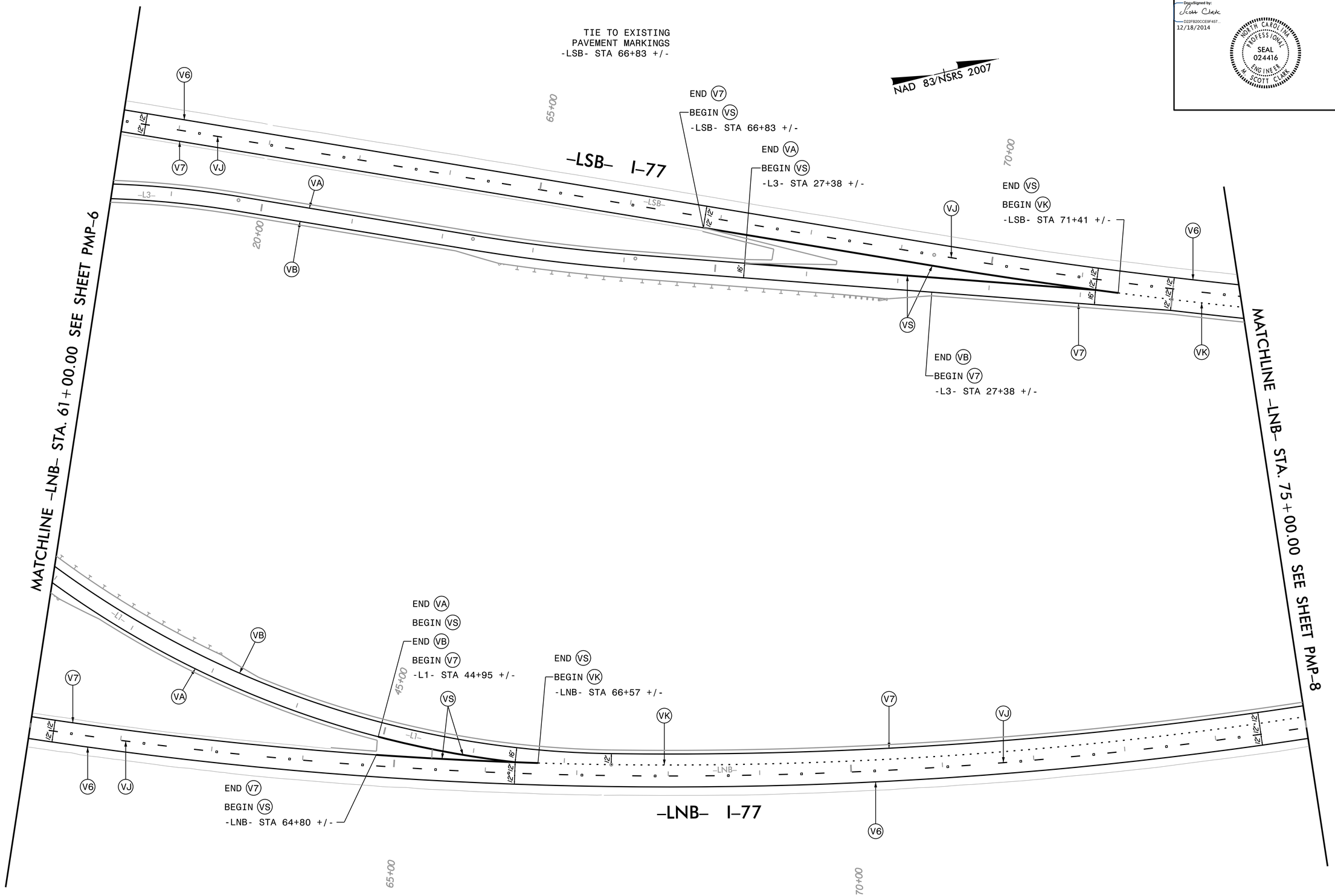

PROJECT REFERENCE NO.	SHEET NO.
K-4908	PMP-8

DocuSigned by:
Scott Clark
D22FB20CCE9F457...
12/18/2014

NORTH CAROLINA PROFESSIONAL SEAL 024416 ENGINEER SCOTT CLARK

NAD 83/NSRS 2007

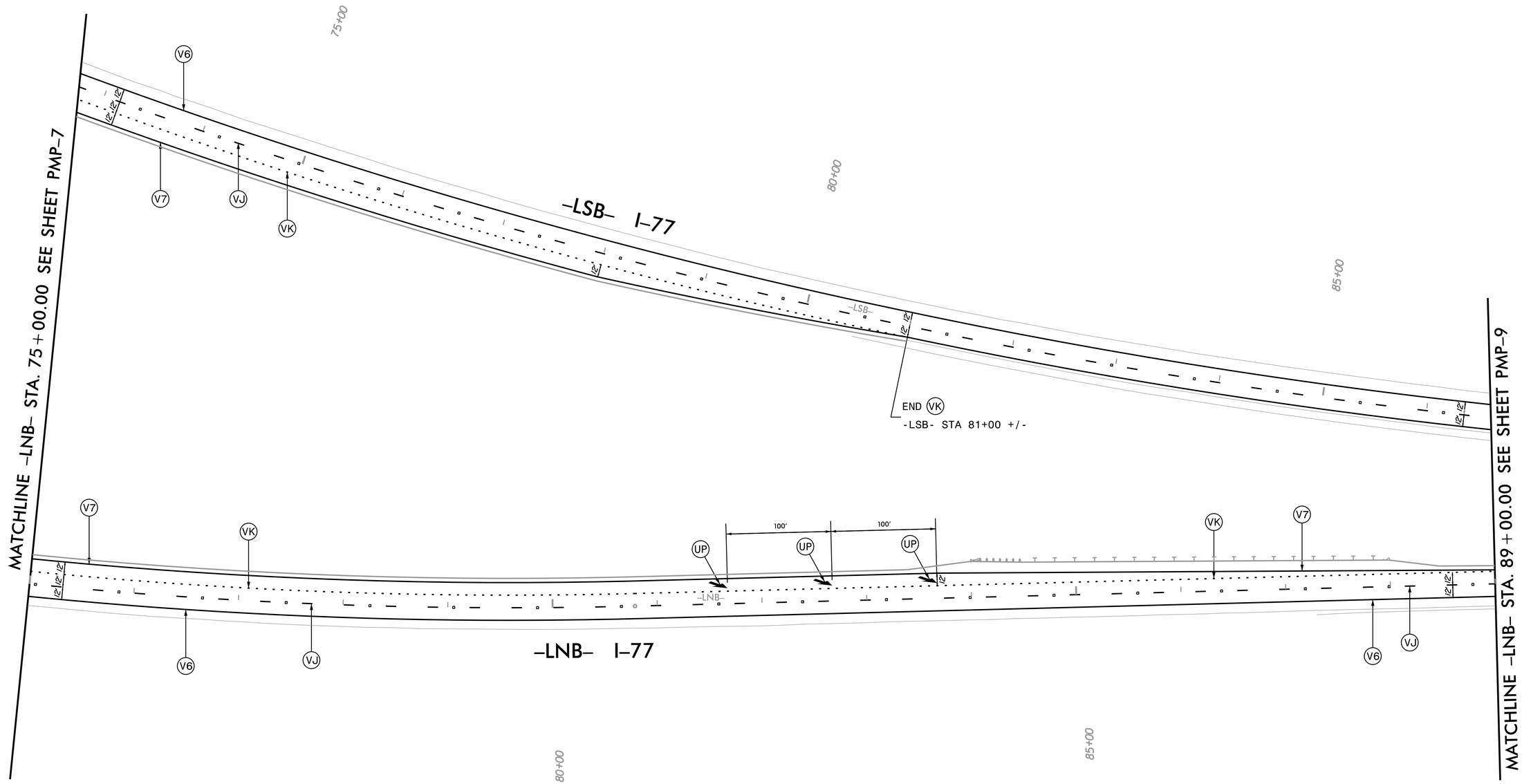

8/17/99

75

CSYTME $$$$
DGN $$$$
USERNAME $$$$

8/17/99

PROJECT REFERENCE NO.	SHEET NO.
K-4908	PMP-9

DocuSigned by:
Scott Clark
D22FB20CCE9F457...
12/18/2014

NORTH CAROLINA PROFESSIONAL SEAL 024416 ENGINEER M. SCOTT CLARK

NAD 83/NSRS 2007

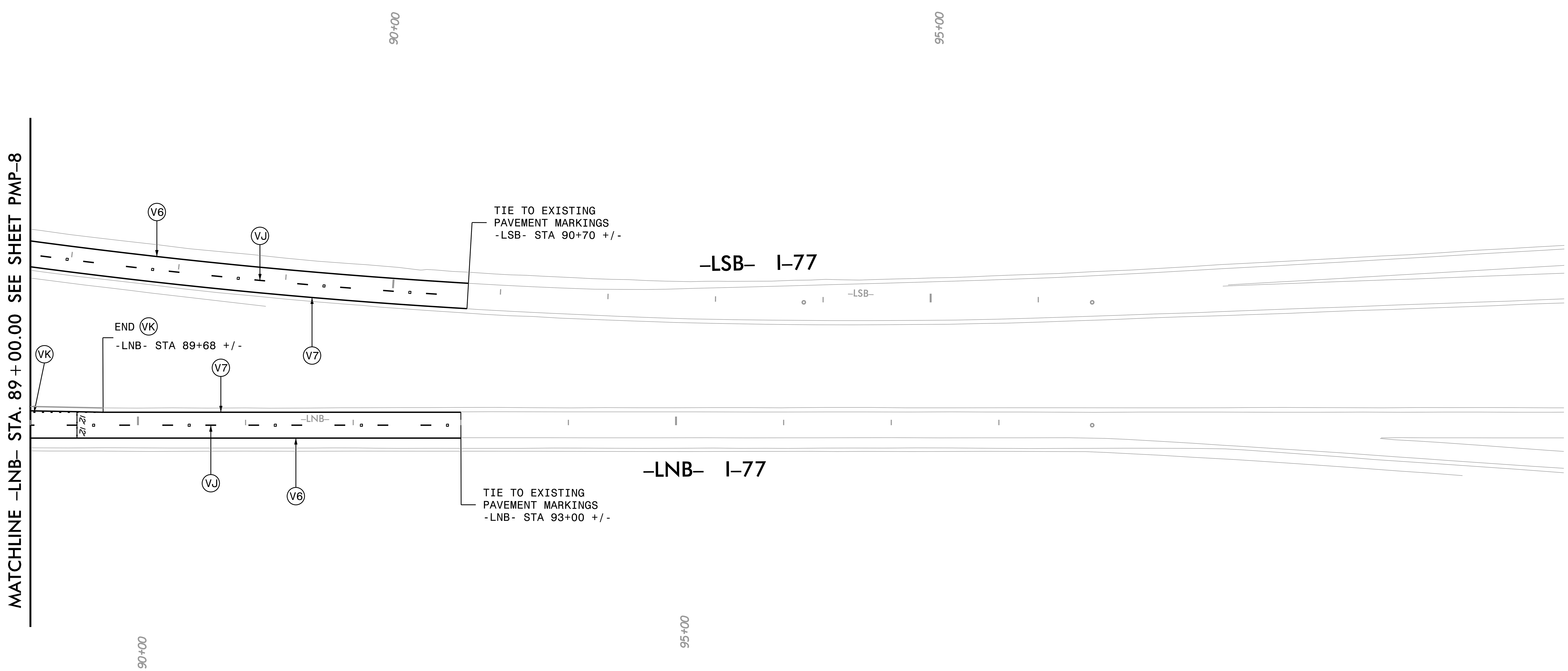

$$$$$$SYSTIME$$$$$
$$$$$$$$$$DGN$$$$$$$$$$$$$$$$
$$$$USERNAME$$$$