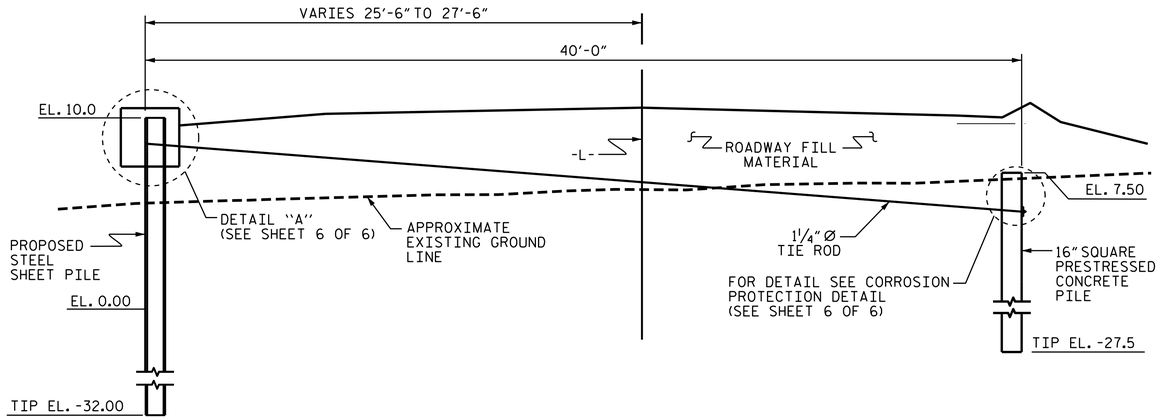

SECTION E-E

AT STA. 54+77.96 -L- TO 56+00.00 -L-

(PVC TUBE NOT SHOWN FOR CLARITY)

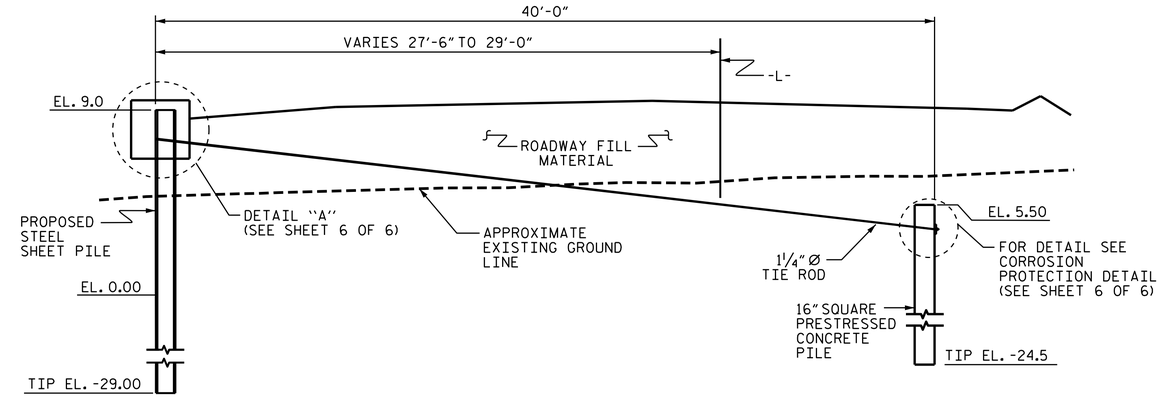

SECTION F-F

AT STA. 56+00.00 -L- TO 60+00.00 -L-

(PVC TUBE NOT SHOWN FOR CLARITY)

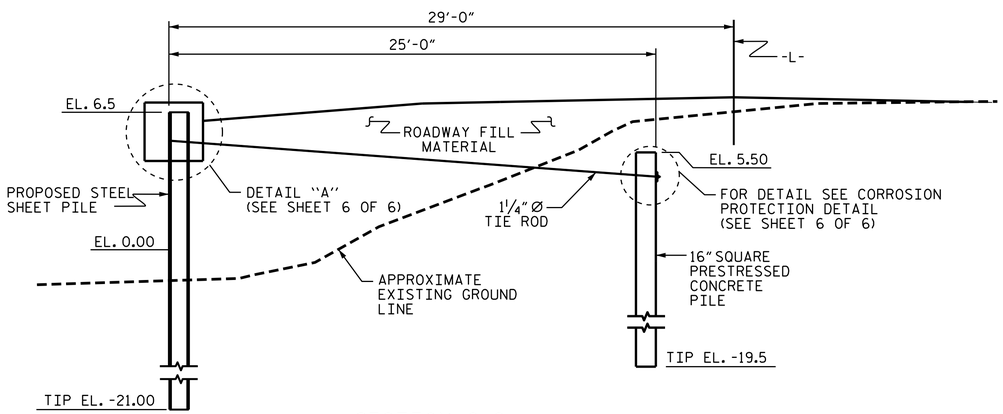

SECTION G-G

AT STA. 60+00.00 -L- TO 62+75.00 -L-

(PVC TUBE NOT SHOWN FOR CLARITY)

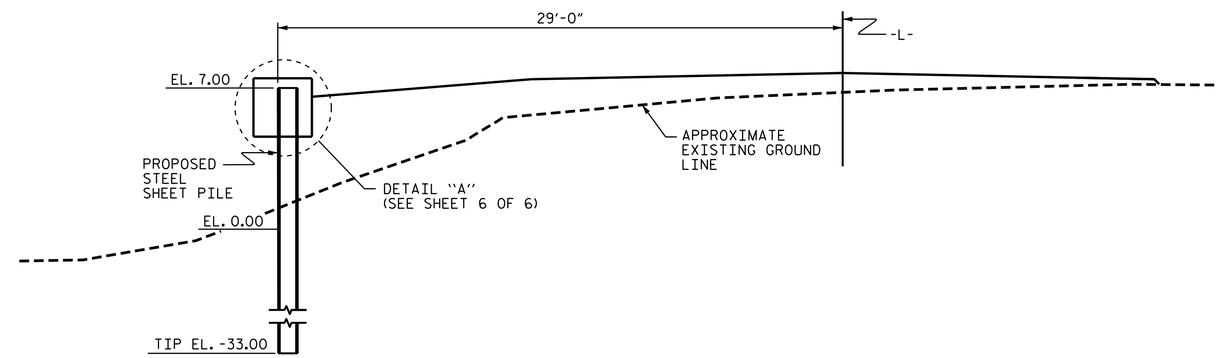

SECTION H-H

AT STA. 62+75.00 -L- TO 64+00.00 -L-

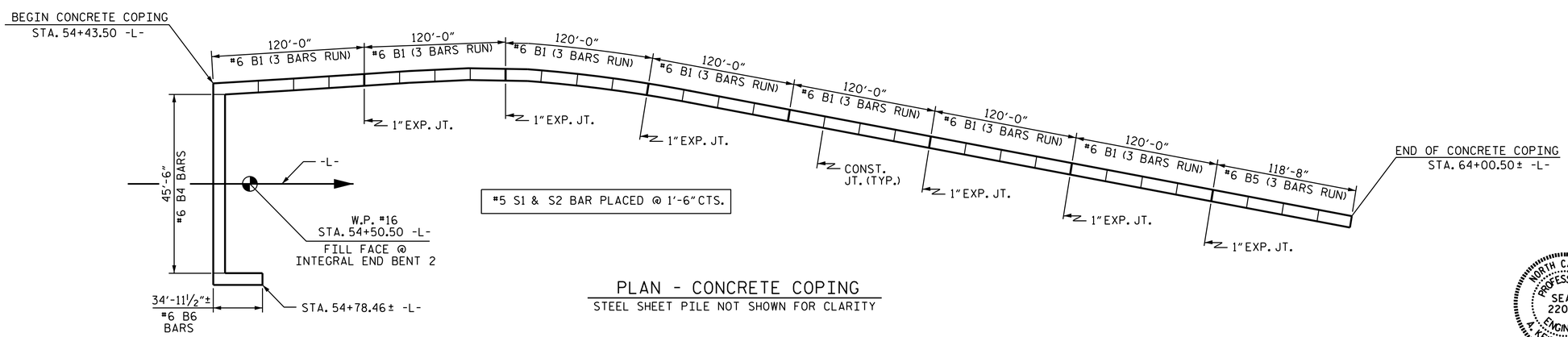

PLAN - CONCRETE COPING

STEEL SHEET PILE NOT SHOWN FOR CLARITY

PROJECT NO. B-4722B

CARTERET COUNTY

STATION: 47+75.00 -L-

SHEET 5 OF 6

STATE OF NORTH CAROLINA
DEPARTMENT OF TRANSPORTATION
RALEIGH

TIEBACK STEEL SHEET PILE RETAINING WALL 2

NORTH CAROLINA PROFESSIONAL SEAL 22005 ENGINEER A. KEITH PASCHAL

DocuSigned by: A. Keith Paschal 1/24/2015
F8B6AD6DB2FC48F...

REVISIONS						SHEET NO.
NO.	BY:	DATE:	NO.	BY:	DATE:	W-5
1			3			TOTAL SHEETS
2			4			7

DRAWN BY : B. N. BARODAWALA DATE : 10-12-14
CHECKED BY : D. G. ELY DATE : 11-26-14
DESIGN ENGINEER OF RECORD: A. K. PATEL DATE : 12-9-14

24-JAN-2015 11:08
R:\structures\FinalPlans\B4722B_SHEET PILE WALL.dgn
kpaschal