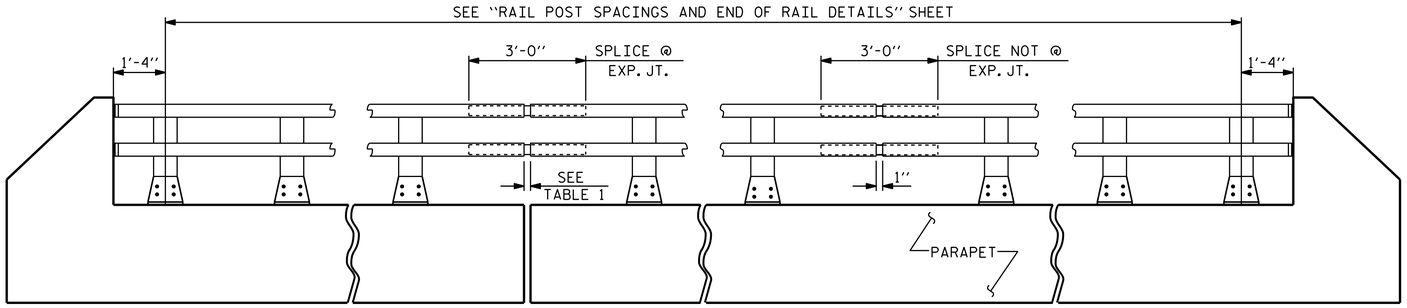

ELEVATION

NOTE : FOR ATTACHMENT OF METAL RAIL TO END POST, SEE STANDARD NO. BMR2.

TABLE 1	
℄ EXP. JT. @	RAIL OPENING
BENT No. 3	1 7/8"
BENT No. 6	1 7/8"
BENT No. 9	1 7/8"
BENT No. 12	1 7/8"

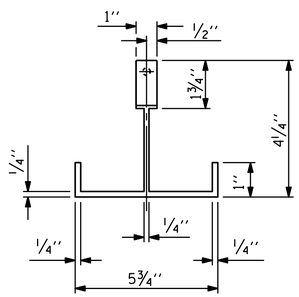

PLAN

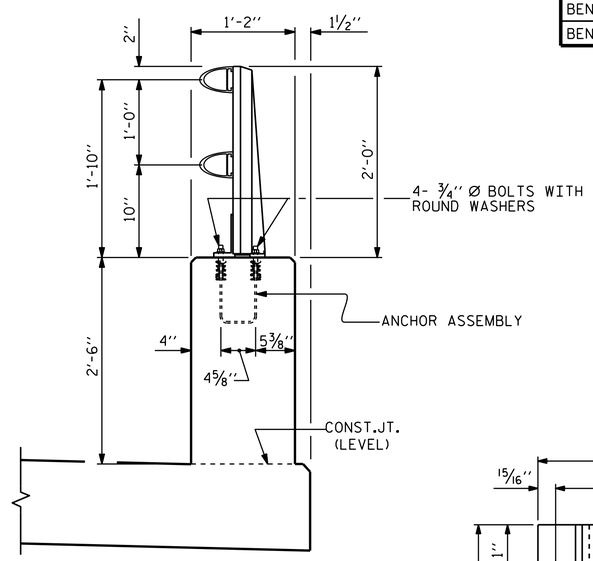

SECTION THRU PARAPET AND RAIL

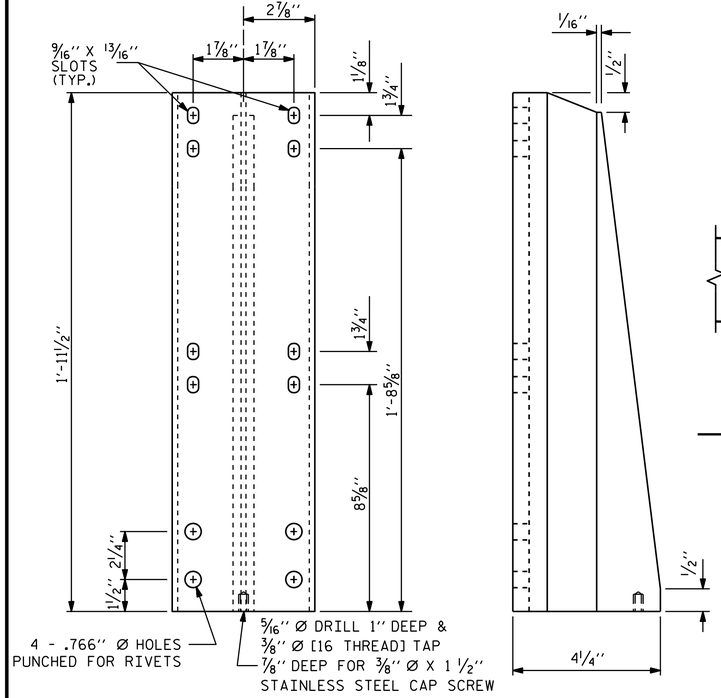

FRONT ELEVATION

SIDE ELEVATION

DETAILS OF POST

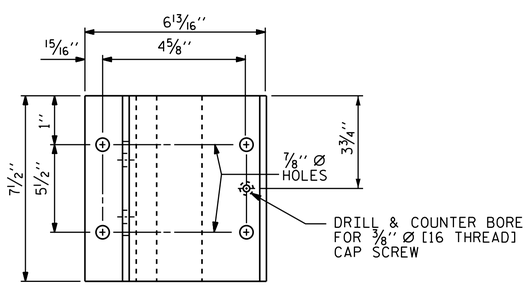

PLAN

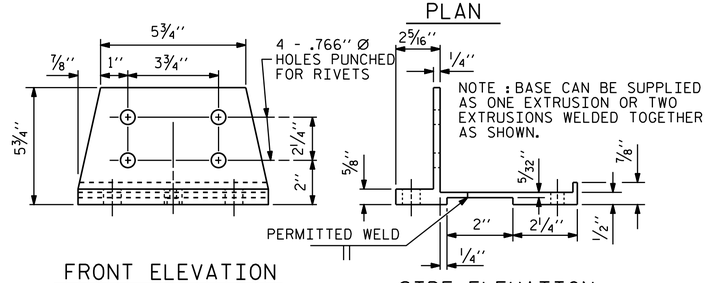

FRONT ELEVATION

SIDE ELEVATION

POST BASE DETAILS

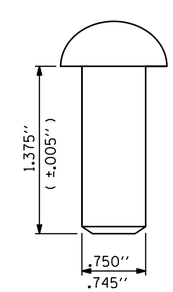

RIVET DETAIL

NOTES

METAL RAILS SHALL BE ALUMINUM IN ACCORDANCE WITH THE REQUIREMENTS OF THE GENERAL NOTES AND THE FOLLOWING SPECIFICATIONS.

UNLESS OTHERWISE REQUIRED IN THE CONTRACT DOCUMENTS, THE CONTRACTOR HAS THE OPTION TO USE AN ALTERNATE TO THE 2 BAR METAL RAIL. THE ALTERNATE RAIL SHALL MEET THE REQUIREMENTS OF THE AASHTO LRFD BRIDGE DESIGN SPECIFICATIONS AND MUST BE LISTED ON THE DEPARTMENT'S APPROVED PRODUCTS LIST (APL) UNDER "2 BAR METAL RAIL ALTERNATE". ADJUSTMENTS TO THE CONCRETE PARAPET WILL NOT BE ALLOWED.

ALUMINUM RAILS

MATERIAL FOR POSTS, BASES AND RAILS, EXPANSION BARS AND CLAMP BARS SHALL BE ASTM B-221 ALLOY 6061-T6.

MATERIAL FOR RIVETS SHALL BE ASTM B316 ALLOY 6061-T6. RIVETS SHALL BE STANDARD BUTTON HEAD AND CONE POINT COLD DRIVEN AS PER DRAWING.

THE BASE OF RAIL POSTS, OR ANY OTHER ALUMINUM SURFACE IN CONTACT WITH CONCRETE SHALL BE THOROUGHLY COATED WITH AN ALUMINUM IMPREGNATED CAULKING COMPOUND OF APPROVED QUALITY.

MATERIAL FOR SHIMS TO BE ASTM B209 ALLOY 6061-T6.

GENERAL NOTES

RAILING SHALL BE CONTINUOUS FROM END POST TO END POST OF BRIDGE. EACH JOINT IN RAIL LENGTH SHALL BE SPLICED AS DETAILED. PANEL LENGTHS OF RAIL SHALL BE ATTACHED TO A MINIMUM OF THREE POSTS.

FOR END OF RAIL TO CLEAR FACE OF CONCRETE END POST DIMENSION, SEE STANDARD NO. BMR2.

CAP SCREWS SHALL BE ASTM F593 ALLOY 305 STAINLESS STEEL. WASHERS SHALL MEET THE REQUIREMENTS OF ASTM F844 EXCEPT THEY SHALL BE MADE FROM ALLOY 304 STAINLESS STEEL.

CERTIFIED MILL REPORTS ARE REQUIRED FOR RAILS AND POSTS. SHOP INSPECTION IS NOT REQUIRED.

METAL RAIL POSTS SHALL BE SET NORMAL TO CURB GRADE.

METHOD OF MEASUREMENT FOR METAL RAILS: FOR LENGTH OF METAL RAILS TO BE PAID FOR, SEE THE STANDARD SPECIFICATIONS.

CURVED RAIL USAGE: WHERE RAILS ARE TO BE USED ON BRIDGES ON HORIZONTAL AND/OR VERTICAL CURVATURE THE CONTRACTOR MAY, AT HIS OPTION, HAVE THE REQUIRED CURVATURE IN THE RAIL FORMED IN THE SHOP OR IN THE FIELD. IN EITHER EVENT, THE RAIL SHALL CONFORM WITHOUT BUCKLING OR KINKING TO THE REQUIRED CURVATURE IN A UNIFORM MANNER ACCEPTABLE TO THE ENGINEER.

TO INSURE FUTURE IDENTIFICATION OF THE FABRICATOR, A PERMANENT IDENTIFYING MARK SHALL BE PLACED ON EACH POST. THE METHOD OF MARKING AND LOCATION SHALL BE SUCH THAT IT DOES NOT DETRACT FROM THE APPEARANCE OF THE POST, BUT REMAINS VISIBLE AFTER RAIL PLACEMENT.

SHIMS SHALL BE USED AS NECESSARY FOR POST ALIGNMENT.

ALLOY 6351-T5 MAY BE SUBSTITUTED FOR ALLOY 6061-T6 WHERE APPLICABLE.

MINOR VARIATIONS IN DETAILS OF METAL RAIL WILL BE CONSIDERED. DETAILS OF SUCH VARIATIONS, IF DESIRED, SHALL BE SUBMITTED FOR APPROVAL.

GROOVED CONTRACTION JOINTS, 1/2" IN DEPTH, SHALL BE TOOLED IN ALL EXPOSED FACES OF THE PARAPET AND IN ACCORDANCE WITH ARTICLE 825-10(B) OF THE STANDARD SPECIFICATIONS. A CONTRACTION JOINT SHALL BE LOCATED AT EACH THIRD POINT BETWEEN PARAPET EXPANSION JOINTS. ONLY ONE CONTRACTION JOINT IS REQUIRED AT MIDPOINT OF PARAPET SEGMENTS LESS THAN 20 FEET IN LENGTH AND NO CONTRACTION JOINTS ARE REQUIRED FOR THOSE SEGMENTS LESS THAN 10 FEET IN LENGTH.

PAY LENGTH = 2683.67 LIN. FT.

PROJECT NO. B-4722B

CARTERET COUNTY

STATION: 47+75.00 -L-

SHEET 1 OF 6

STATE OF NORTH CAROLINA
DEPARTMENT OF TRANSPORTATION
RALEIGH

STANDARD

2 BAR METAL RAIL

NORTH CAROLINA PROFESSIONAL SEAL 22005 ENGINEER A. KEITH PASCHAL

DocuSigned by: A. Keith Paschal F8B6AD6DB2FC48F... 1/16/2015

ASSEMBLED BY : D. G. ELY	DATE : 01/27/14
CHECKED BY : B. N. BARODAWALA	DATE : 03/31/14
DRAWN BY : EEM 6/94	REV. 5/1/06 TLA/GM
CHECKED BY : RGW 6/94	REV. 10/1/11 MAA/GM
	REV. 6/13 MAA/GM

REVISIONS								SHEET NO.
NO.	BY:	DATE:	NO.	BY:	DATE:			S-22
1			3					TOTAL SHEETS
2			4					45

STD. NO. BMR3

16-JAN-2015 15:10
R:\structures\Final Plans\B4722B_sd_BR.dgn
kpaschal