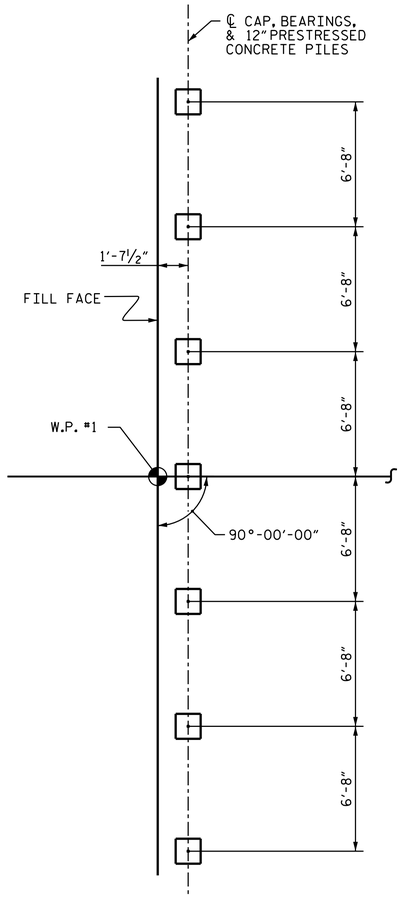

INTEGRAL END BENT 1

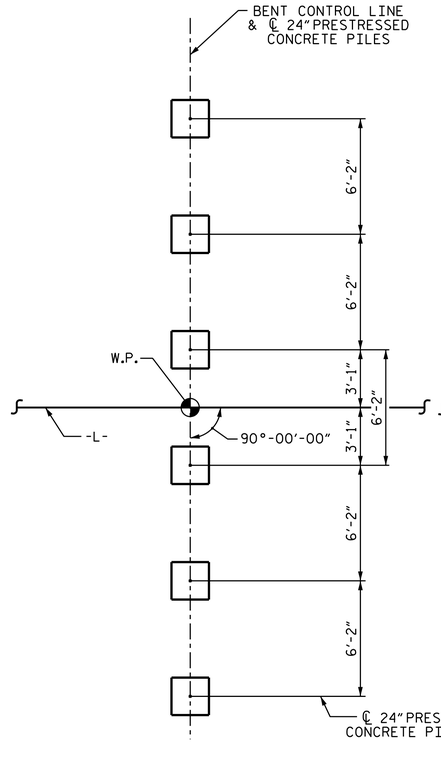

BENTS 1-3, 5, 6, 8, 9, 11-14

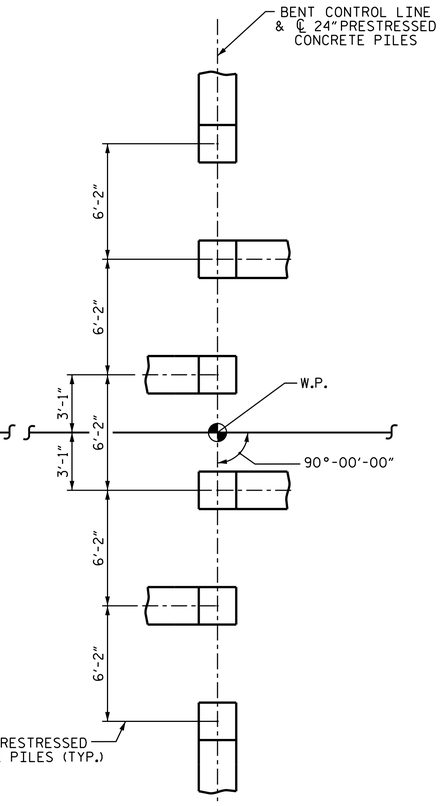

BENTS 4, 7, & 10

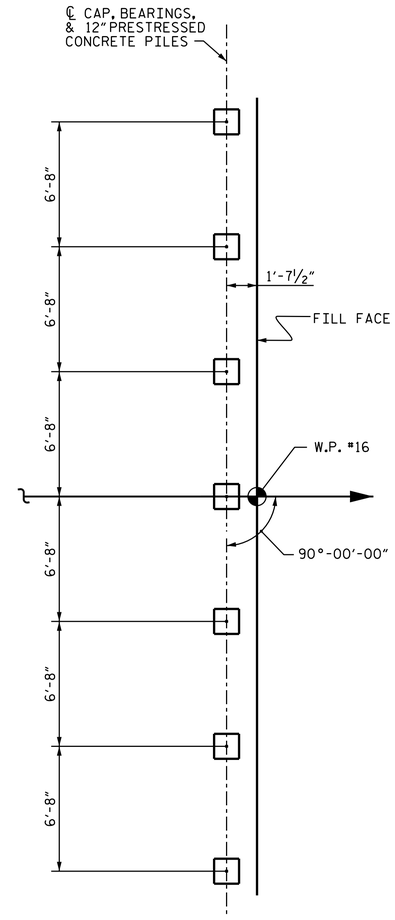

INTEGRAL END BENT 2

NOTES

FOR PILES, SEE SECTION 450 OF THE STANDARD SPECIFICATIONS.

PILES AT INTEGRAL END BENT 1 AND INTEGRAL END BENT 2 ARE DESIGNED FOR A FACTORED RESISTANCE OF 115 TONS PER PILE.

DRIVE PILES AT INTEGRAL END BENT 1 AND INTEGRAL END BENT 2 TO A REQUIRED DRIVING RESISTANCE OF 160 TONS AND 190 TONS PER PILE, RESPECTIVELY.

PILES AT BENT 1 THROUGH BENT 14 ARE DESIGNED FOR A FACTORED RESISTANCE OF 240 TONS PER PILE.

DRIVE PILES AT BENT 1 THROUGH BENT 14 TO A REQUIRED DRIVING RESISTANCE OF 375, 375, 400, 400, 400, 400, 365, 380, 380, 390, 390, 390, 400 AND 390 TONS PER PILE RESPECTIVELY. THIS REQUIRED DRIVING RESISTANCE INCLUDES ADDITIONAL RESISTANCE FOR DOWNDRAG OR SCOUR.

INSTALL PILES AT BENT 1 THROUGH BENT 14 TO A TIP ELEVATION NO HIGHER THAN -40.0 FT, -37.0 FT, -39.0 FT, -39.0 FT, -37.0 FT, -39.0 FT, -39.0 FT, -53.0 FT, -50.0 FT, -41.0 FT, -52.0 FT, -52.0 FT, -52.0 FT, AND -48.0 FT, RESPECTIVELY.

THE SCOUR CRITICAL ELEVATIONS FOR BENT 1 THROUGH BENT 14 ARE ELEVATION -14.0 FT, -15.0 FT, -15.0 FT, -18.0 FT, -19.0 FT, -19.0 FT, -20.0 FT, -24.0 FT, -24.0 FT, -21.0 FT, -21.0 FT, -20.0 FT, -18.0 FT AND -15.0 FT, RESPECTIVELY. SCOUR CRITICAL ELEVATIONS ARE USED TO MONITOR POSSIBLE SCOUR PROBLEMS DURING THE LIFE OF THE STRUCTURE.

TESTING THE FIRST PRODUCTION PILE WITH THE PDA DURING DRIVING, RESTRIKING OR REDRIVING IS REQUIRED AT BENT 3, BENT 4, AND BENT 10. FOR PDA TESTING, SEE SECTION 450 OF THE STANDARD SPECIFICATIONS.

TESTING THE FIRST PRODUCTION PILE WITH THE PDA DURING DRIVING, RESTRIKING OR REDRIVING IS REQUIRED AT BENT 5 OR BENT 6 AND BENT 11 THROUGH BENT 14. FOR PDA TESTING, SEE SECTION 450 OF THE STANDARD SPECIFICATIONS.

STEEL PILE TIPS ARE REQUIRED FOR PRESTRESSED CONCRETE PILES AT BENT 2, BENT 3, BENT 5 AND BENT 6.

IT HAS BEEN ESTIMATED THAT A HAMMER WITH AN EQUIVALENT RATED ENERGY IN THE RANGE OF 105-190 FT-KIPS PER BLOW WILL BE REQUIRED TO DRIVE PILES AT BENT 1 THROUGH BENT 14. THIS ESTIMATED ENERGY RANGE DOES NOT RELEASE THE CONTRACTOR FROM PROVIDING DRIVING EQUIPMENT IN ACCORDANCE WITH SUBARTICLE 450-3(D)(2) OF THE STANDARD SPECIFICATIONS.

DO NOT DRIVE PILES AT END BENT NO. 1 AND END BENT NO. 2 UNTIL AFTER OBSERVING A TWO MONTH WAITING PERIOD BEGINNING WHEN SURCHARGE HAS BEEN PLACED AS SHOWN IN EMBANKMENT SURCHARGE DETAILS PLAN IN ROADWAY PLANS. SEE ROADWAY SPECIAL PROVISIONS FOR EMBANKMENT SETTLEMENT GAUGES PROVISION (SP2 R75.)

FOUNDATION LAYOUT

DIMENSIONS LOCATING PILES ARE SHOWN TO PILE CENTERLINE AT BOTTOM OF CAP

W.P. NO.	STATION NO.	W.P. NO.	STATION NO.
1	40+99.50 -L-	9	48+20.00 -L-
2	41+90.00 -L-	10	49+10.00 -L-
3	42+80.00 -L-	11	50+00.00 -L-
4	43+70.00 -L-	12	50+90.00 -L-
5	44+60.00 -L-	13	51+80.00 -L-
6	45+50.00 -L-	14	52+70.00 -L-
7	46+40.00 -L-	15	53+60.00 -L-
8	47+30.00 -L-	16	54+50.50 -L-

PROJECT NO. B-4722B
CARTERET COUNTY
STATION: 47+75.00 -L-

SHEET 4 OF 6

NORTH CAROLINA PROFESSIONAL SEAL 22005 ENGINEER A. KEITH PASCHAL

DocuSigned by: A. Keith Paschal F8B6AD6DB2FC48F... 1/20/2015

STATE OF NORTH CAROLINA
DEPARTMENT OF TRANSPORTATION
RALEIGH

GENERAL DRAWING

BRIDGE OVER NORTH RIVER ON US 70 BETWEEN BEAUFORT AND BETTIE

REVISIONS						SHEET NO.
NO.	BY:	DATE:	NO.	BY:	DATE:	S-4
1			3			TOTAL SHEETS
2			4			42

DRAWN BY : B.N.BARODAWALA DATE : 8-5-14
CHECKED BY : D. G. ELY DATE : 8-15-14
DESIGN ENGINEER OF RECORD: A. K. PASCHAL DATE : 11-2014

20-JAN-2015 10:42
R:\structures\Final Plans\B-4722B_SD_GD.dgn
nruffin