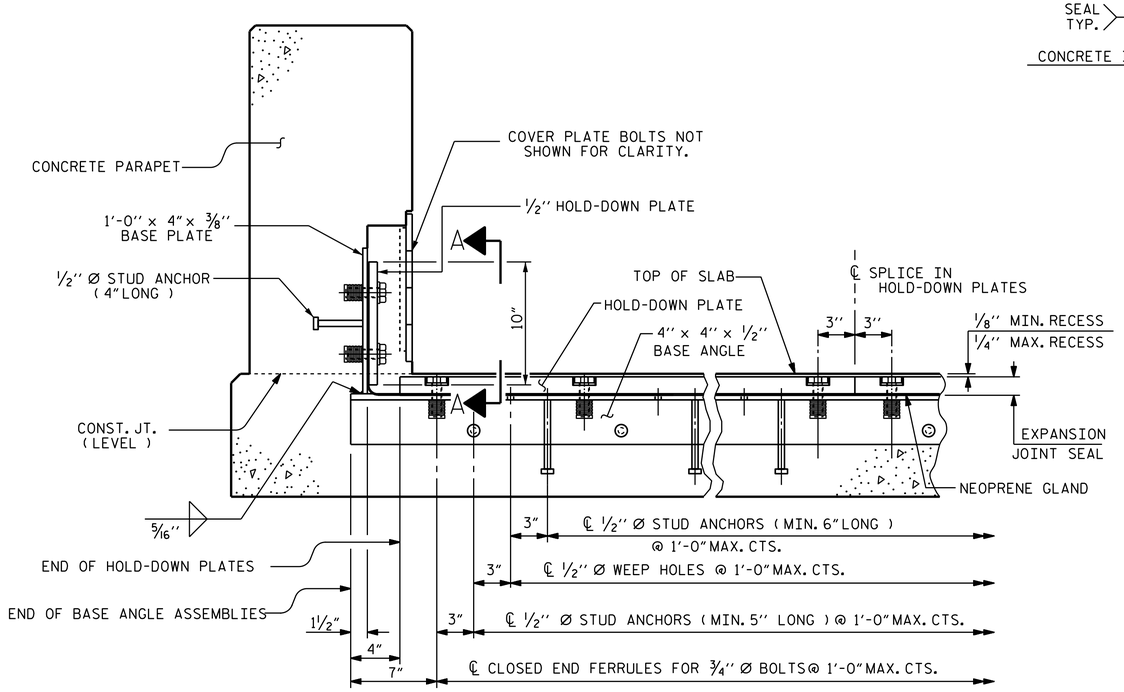

SECTION THRU PARAPET NORMAL TO JOINT

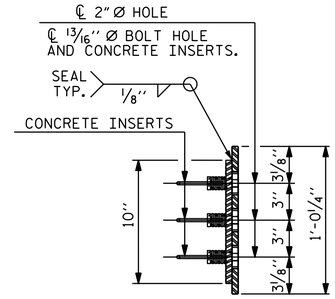

END VIEW

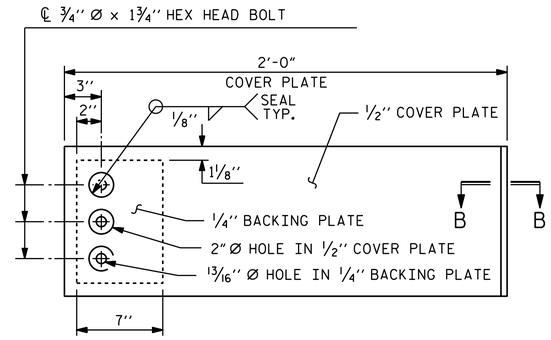

ELEVATION VIEW

COVER PLATE DETAILS

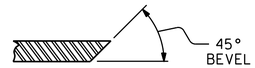

SECTION B - B

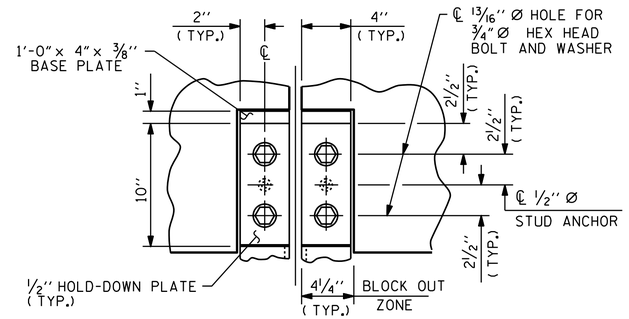

SECTION A - A

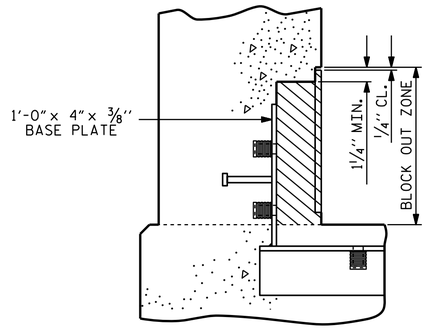

BLOCK OUT DETAIL

SEE " SECTION A - A " FOR OTHER DETAILS.

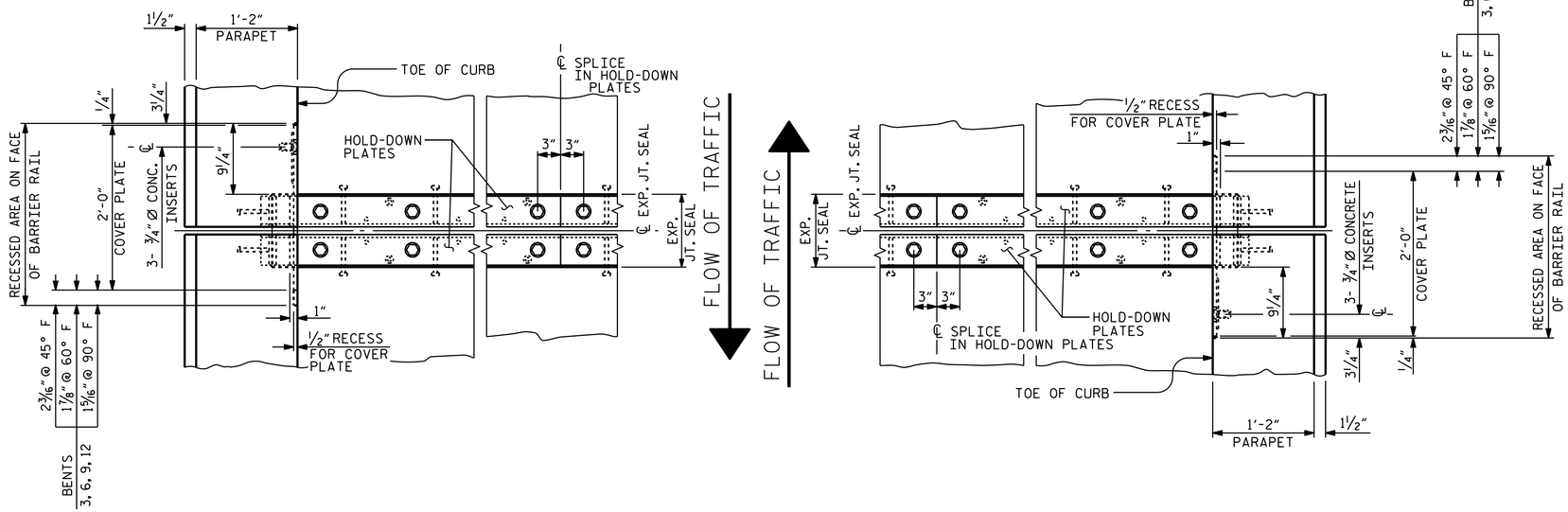

PLAN OF EXPANSION JOINT SEAL

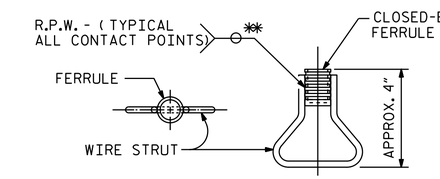

PLAN ELEVATION

CONCRETE INSERT

** EACH WELDED ATTACHMENT OF WIRE TO FERRULE SHALL DEVELOP THE TENSILE STRENGTH OF THE WIRE.

PROJECT NO. B-4722B

CARTERET COUNTY

STATION: 47+75.00 -L-

SHEET 2 OF 2

STATE OF NORTH CAROLINA
DEPARTMENT OF TRANSPORTATION
RALEIGH

STANDARD

EXPANSION JOINT SEAL DETAILS FOR CONCRETE PARAPET

ASSEMBLED BY : D. G. ELY		DATE : 05/14/14	
CHECKED BY : B. N. BARODAWALA		DATE : 05/19/14	
DESIGN ENGINEER OF RECORD : M. M. AHMED		DATE : 10/14/14	
DRAWN BY : MAA 2/12	ADDED ?/??/12		
CHECKED BY : GM 2/12			

NORTH CAROLINA PROFESSIONAL SEAL 22005 ENGINEER A. KEITH PASCHAL

DocuSigned by: A. Keith Paschal F8B6AD6DB2FC48F... 1/16/2015

REVISIONS						SHEET NO.
NO.	BY:	DATE:	NO.	BY:	DATE:	S-30
1			3			TOTAL SHEETS
2			4			45

STD. NO. EJS5

16-JAN-2015 15:10
R:\structures\Final Plans\B4722B_sd_EJS.dgn
kpaschal