5/14/99

ELECTRICAL DESIGN BY:
DIBBLE & PLEDGER, P.A.
222 WEST MAIN STREET, WASHINGTON N.C. 27889
PHONE : (252) 946-3320 FAX: (252) 946-5160
E-MAIL: rpledger@dibbleandpledger.com

PROJECT REFERENCE NO.	SHEET NO.
B-4722B	UC-3A
DESIGNED BY: REP	
DRAWN BY: WAW	
CHECKED BY: REP	
APPROVED BY: REP	
REVISED: REP	
NORTH CAROLINA DEPARTMENT OF TRANSPORTATION	
UTILITIES ENGINEERING SEC. PHONE: (919)707-6690 FAX: (919)250-4151	12/12/2014 UTILITY CONSTRUCTION PLANS ONLY

NORTH CAROLINA PROFESSIONAL SEAL 19654 ENGINEER RONALD E. PLEDGER

UTILITY CONSTRUCTION

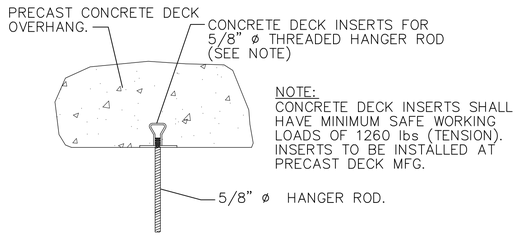

DETAIL "G"
INSERT NTS

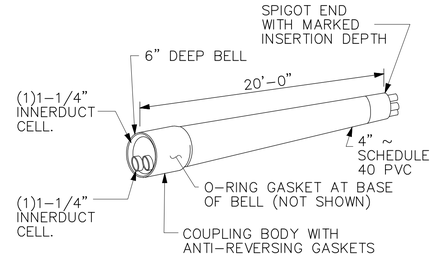

SCHEDULE 40 PVC
MULTI-CELL RACEWAY

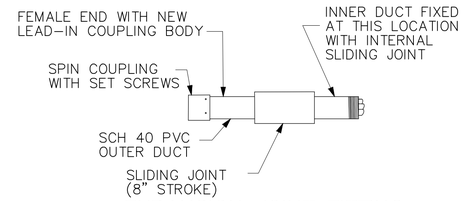

EXPANSION JOINT FITTING

DETAIL "D"
4" MULTI-CELL COMPONENTS

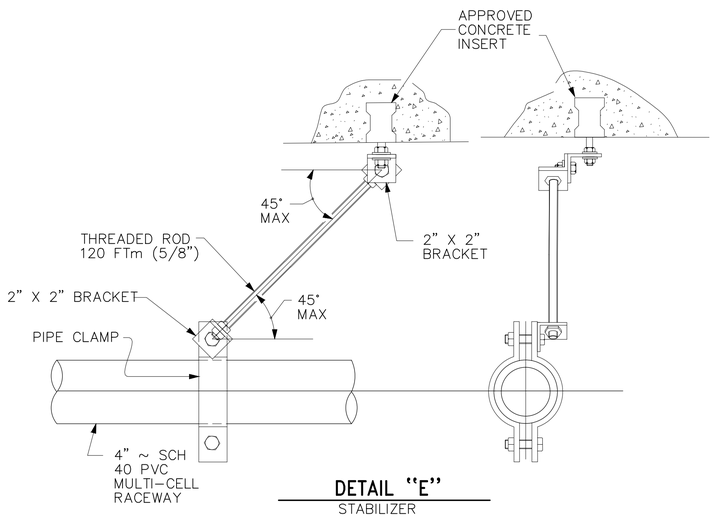

DETAIL "E"
STABILIZER

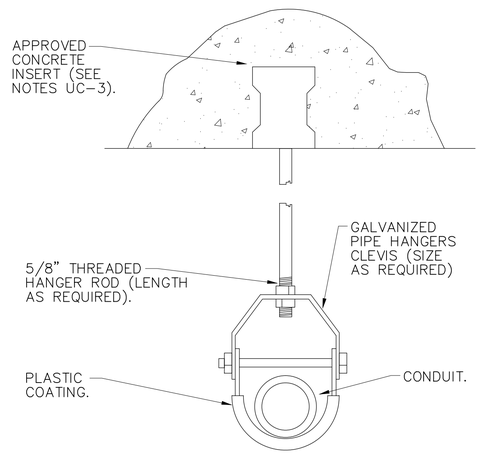

(DETAIL "C")
HANGER ASSEMBLY NTS

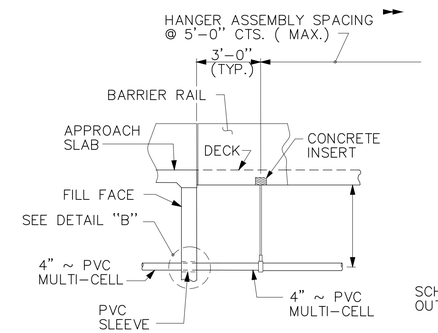

VIEW A-A

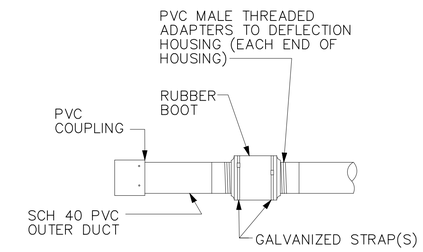

DETAIL "F"
DEFLECTION COUPLING

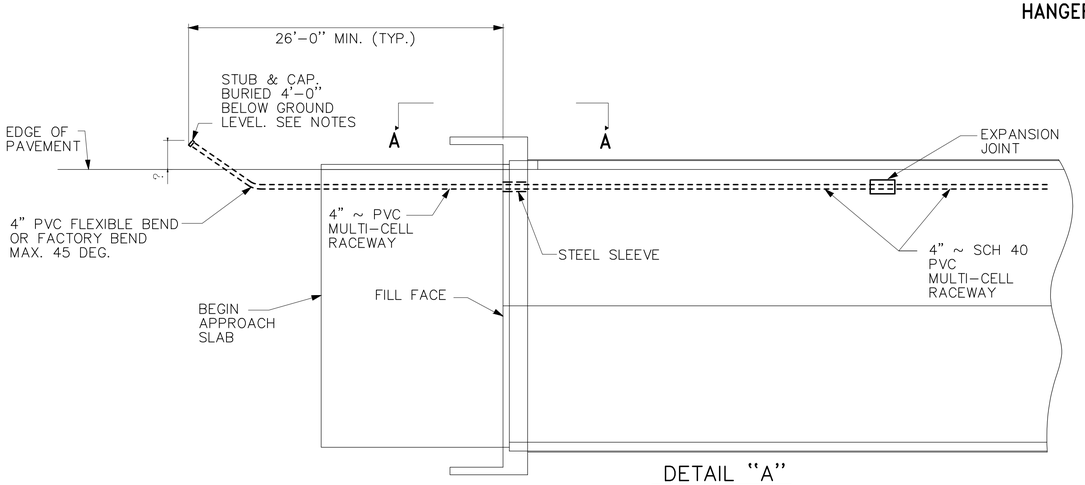

DETAIL "A"
TERMINATION OF CONDUIT AT BACK WALL
(END BENT 1 SHOWN, END BENT 2 SIMILAR)

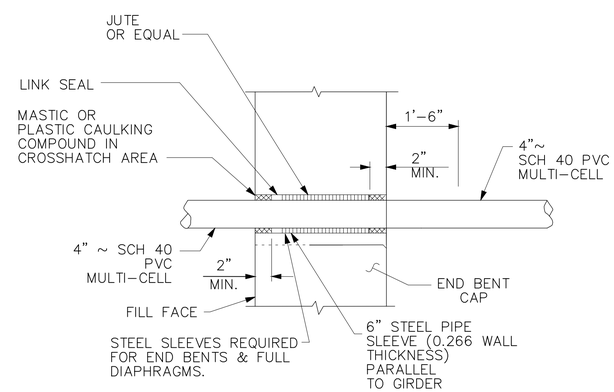

DETAIL "B"
STEEL SLEEVE INSTALLATION AT BACKWALL.

DRAWN BY: WAW DATE: 12-2-2014
CHECKED BY: REP DATE: 12-2-2014

PROJECT NO. B-4722B
CARTERET COUNTY
STATION: 47+75.00 -L-

SHEET 4 OF 7

STATE OF NORTH CAROLINA
DEPARTMENT OF TRANSPORTATION
RALEIGH

ELECTRICAL DETAILS

BRIDGE OVER NORTH RIVER ON US 70 BETWEEN BEAUFORT AND BETTIE

REVISIONS						SHEET NO.
NO.	BY:	DATE:	NO.	BY:	DATE:	UC-3A
1			3			TOTAL SHEETS
2			4			7