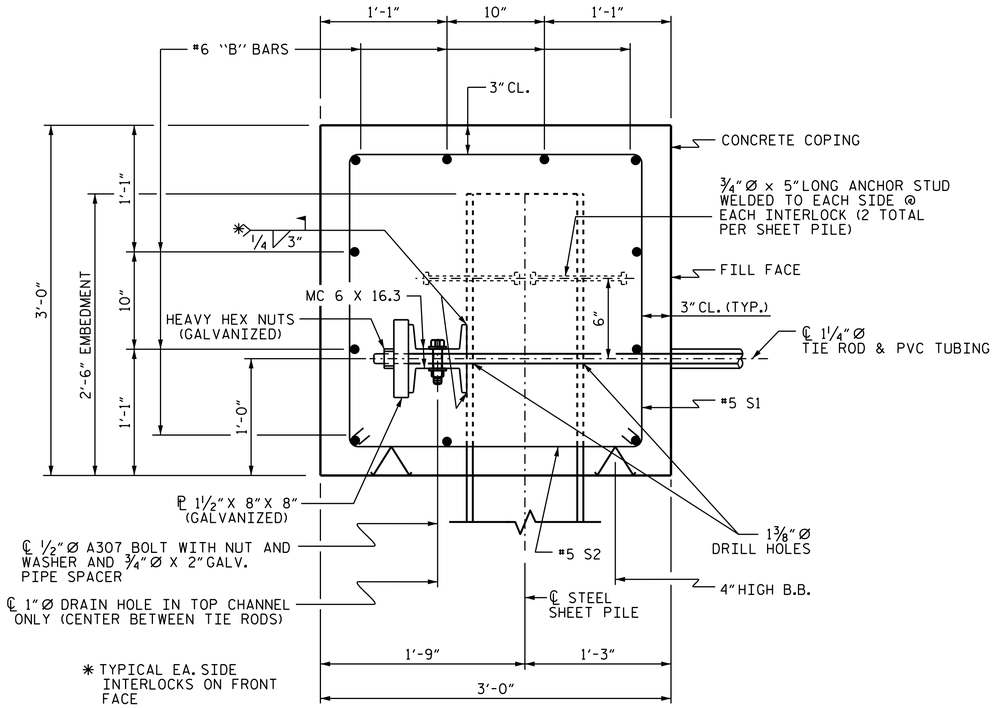

DETAIL "A"

(SHOWING ROD ANCHORAGE SYSTEM & COPING REINFORCEMENT)

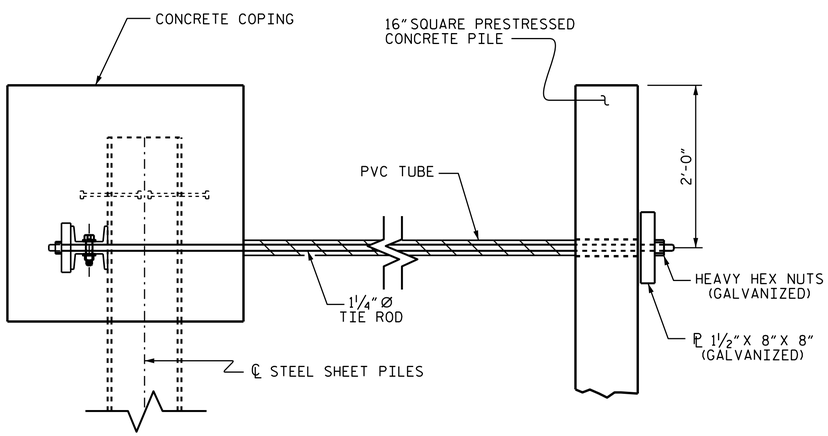

CORROSION PROTECTION DETAIL

NOTES

THE TIEBACK STEEL SHEET PILE RETAINING WALL SHALL INCLUDE ½" X 8" X 8" GALVANIZED PLATE, NUTS, BOLTS, WASHER, MC6 X 16.3, STUDS, ¾"Ø X 2" GALVANIZED PIPE SPACER, 1¼"Ø TIE ROD, SEE SPECIAL PROVISIONS FOR TIEBACK STEEL SHEET PILE RETAINING WALL.

SHEET PILES SHALL BE METALLIZED. ALL METALLIZED SURFACES SHALL RECEIVE A SEAL COATING AS SPECIFIED IN THE SPECIAL PROVISION FOR THERMAL SPRAYED COATINGS (METALLIZATION.)

FOR OTHER DESIGN DATA AND GENERAL NOTES, SEE SHEET SN.

THIS STRUCTURE CONTAINS THE NECESSARY CORROSION PROTECTION REQUIRED FOR A CORROSIVE SITE.

CLASS AA CONCRETE SHALL BE USED IN ALL CAST-IN-PLACE CONCRETE, AND SHALL CONTAIN CALCIUM NITRITE CORROSION INHIBITOR IN ACCORDANCE WITH THE STANDARD SPECIFICATIONS.

FOR CORROSION PROTECTION OF TIE RODS, SEE SPECIAL PROVISIONS FOR TIEBACK STEEL SHEET PILE RETAINING WALL.

ALL BAR SUPPORTS USED IN THE COPING AND ALL INCIDENTAL REINFORCING STEEL SHALL BE EPOXY COATED IN ACCORDANCE WITH THE STANDARD SPECIFICATIONS.

FOR SUBMITTAL OF WORKING DRAWINGS, SEE SPECIAL PROVISIONS.

FOR FALSEWORK AND FORMWORK, SEE SPECIAL PROVISIONS.

FOR CRANE SAFETY, SEE SPECIAL PROVISIONS.

FOR GROUT FOR STRUCTURES, SEE SPECIAL PROVISIONS.

THE CONTRACTOR SHALL PROVIDE INDEPENDENT ASSURANCE SAMPLES OF REINFORCING STEEL AS FOLLOWS: FOR PROJECTS REQUIRING UP TO 400 TONS OF REINFORCING STEEL, ONE 30 INCH SAMPLE OF EACH SIZE BAR USED, AND FOR PROJECTS REQUIRING OVER 400 TONS OF REINFORCING STEEL, TWO 30 INCH SAMPLES OF EACH SIZE BAR USED. THE BARS FROM WHICH THE SAMPLES ARE TAKEN MUST THEN BE SPLICED WITH REPLACEMENT BARS OF THE SIZE AND LENGTH OF THE SAMPLE, PLUS A MINIMUM LAP SPLICE OF THIRTY BAR DIAMETERS. PAYMENT FOR THE SAMPLES OF REINFORCING STEEL SHALL BE CONSIDERED INCIDENTAL TO VARIOUS PAY ITEMS.

FOR SHEET PILE RETAINING WALL WITHOUT TIE RODS AND WITH TIE RODS, SEE TIEBACK STEEL SHEET PILE RETAINING WALL SPECIAL PROVISION.

BE ADVISED OF THE PRESENCE OF RIP RAP WHICH WOULD INTERFERE WITH INSTALLATION OF SHEET PILES AND DEADMAN PILES. ANY COST ASSOCIATED WITH REMOVAL OF RIPRAP WILL BE INCIDENTAL TO THE COST OF TIEBACK STEEL SHEET PILE RETAINING WALL.

SHEET PILES SHALL CONFORM TO ASTM A572 OR ASTM A690 AND SHALL BE METALLIZED AND ALL METALLIZED SURFACES SHALL RECEIVE A SEAL COATING AS SPECIFIED IN THE SPECIAL PROVISION FOR THERMAL SPRAYED COATINGS (METALLIZATION). SEE TIEBACK STEEL SHEET PILE RETAINING WALL SPECIAL PROVISION.

FOR STEEL TIE RODS AND ASSEMBLIES INCLUDING STEEL CHANNELS, PLATES, WALES, BOLTS, NUTS, AND WASHERS, SEE TIEBACK STEEL SHEET PILE RETAINING WALL SPECIAL PROVISION.

INSTALL 12 INCH DIAMETER ISOLATION PVC PIPES FOR TIE RODS AT INTEGRAL END BENT 1 AND INTEGRAL END BENT 2 ABUTMENT WALLS. TIE RODS FOR THE ABUTMENT WALL SECTION SHALL BE LOCATED AT THE BOTTOM OF THE 12 INCH DIAMETER ISOLATION PIPE AS SHOWN ON PLANS.

BOTH ENDS OF ISOLATION PIPE SHALL BE COVERED IN SUCH A WAY AS TO ALLOW VERTICAL MOVEMENT AND KEEP SURROUNDING SOILS FROM ENTERING THE PIPE. SUBMIT DETAILS OF COVER FOR THE ENGINEER'S APPROVAL BEFORE INSTALLATION OF THE PIPES.

INSTALL TIE RODS TO A LOCKOFF LOAD OF 6 KIPS TO REMOVE ANY SAG IN RODS AND TO STRAIGHTEN RODS AS SHOWN ON PLANS AND AS DIRECTED BY THE ENGINEER.

OPERATION OF CONSTRUCTION EQUIPMENT OVER TIE RODS OR ISOLATION PIPES SHALL FOLLOW SECTION 300-7 OF STANDARD SPECIFICATIONS.

FOR FILL BEHIND THE END BENT CAP AND BACKWALL AT BOTH END BENTS, SEE SPECIAL REINFORCED BRIDGE APPROACH FILL PLANS AND SPECIAL PROVISION.

STAGE CONSTRUCT EMBANKMENT BEHIND SHEET PILING FOLLOWING THE CONSTRUCTION SEQUENCE SHOWN ON THE PLAN.

THE ENGINEER MAY ADJUST THE WAITING PERIOD TIME OF EACH EMBANKMENT CONSTRUCTION STAGE BASED ON THE SETTLEMENT MONITORING AND OTHER INSTRUMENTATION READINGS.

DRIVE END BENT PILES TAKING CARE NOT TO DAMAGE TIE RODS.

FOR SURCHARGES, SEE EMBANKMENT SETTLEMENT GAUGES PROVISION AND SECTION 235 OF THE STANDARD SPECIFICATIONS.

FOR EMBANKMENT SETTLEMENT GAUGES AND EMBANKMENT MONITORING INSTRUMENTATIONS, SEE EMBANKMENT MONITORING INSTRUMENTATION PLAN SHEET IN ROADWAY PLANS AND STANDARD EMBANKMENT MONITORING (STANDARD DETAIL NO. 1804.01).

ALL 2"Ø MAX. HOLES FOR 1¼"Ø TIE RODS IN TIEBACK STEEL SHEET PILE RETAINING WALL TO BE DRILLED AND NOT BURNED.

ALL 1¼"Ø MAX. HOLES FOR #5 S2 BARS IN TIEBACK STEEL SHEET PILE RETAINING WALL TO BE DRILLED AND NOT BURNED.

FOR STEEL SHEET PILES, SEE SPECIAL PROVISION FOR TIEBACK STEEL SHEET PILE RETAINING WALLS.

CONSTRUCTION SEQUENCE

1. REMOVE RIP RAP AS NEEDED TO INSTALL STEEL SHEET PILES AND DEADMAN 16" PRESTRESSED CONCRETE PILES WITHOUT DAMAGE.

2. INSTALL SHEET PILES TO THE TIP ELEVATIONS AS SHOWN ON THE PLANS AND IN ACCORDANCE WITH THE IEBACK STEEL SHEET PILE RETAINING WALL SPECIAL PROVISION.

3. CONSTRUCT EMBANKMENT TO ELEVATIONS AS FOLLOWS:

FROM STATION	TO STATION	EMBANKMENT ELEVATION
34+00.00 -L-	40+45.00± -L-	5.0 FT
40+45.00± -L-	40+50.00± -L-	5.0 FT TO 3.0 FT (LINEAR CHANGE)
40+50.00± -L-	41+05.25 -L- (EB1)	3.0 FT TO 0.6 FT (LINEAR CHANGE)
54+44.75 -L- (EB2)	55+00.00± -L-	0.8 FT TO 3.0 FT (LINEAR CHANGE)
55+00.00± -L-	55+05.00± -L-	3.0 FT TO 5.0 FT (LINEAR CHANGE)
55+05.00± -L-	64+00.00± -L-	5.0 FT

4. DRIVE DEADMAN PILES FOR END BENT NO. 1 ABUTMENT WALL AT STA. 40+50.25± -L- AND FOR END BENT NO. 2 ABUTMENT WALL STA. 54+99.75± -L- AND INSTALL TIE RODS AND ASSEMBLIES INCLUDING ISOLATION PIPE.

5. CONSTRUCT EMBANKMENT FROM STA. 40+50.00± -L- TO STA. 41+05.25 -L- AND FROM STA. 54+44.75 -L- TO STA. 55+00.00± -L- TO ELEVATIONS 1.6'± AND 1.8'±, RESPECTIVELY.

6. CONSTRUCT EMBANKMENT AND SPECIAL REINFORCED BRIDGE APPROACH FILL AT BOTH END BENTS UP TO ELEVATION 5.0'. OBSERVE A TWO MONTH WAITING PERIOD FOR THE FILL PLACED UP TO ELEVATION 5.0'. MAINTAIN FILL ELEVATION DURING WAITING PERIOD.

7. CONSTRUCT EMBANKMENT UP TO 1.5 FT BELOW THE TOP OF SHEETING ELEVATIONS FROM STA. 34+00.00 -L- TO STA. 34+75.00 -L- AND FROM STA. 62+75.00 -L- TO STA. 64+00.00 -L- AND UP TO TIE ROD ELEVATIONS FROM STA. 34+75.00 -L- TO STA. 40+71.33± -L- AND FROM STA. 54+78.67± -L- TO STA 62+75.00 -L- AND CONSTRUCT SPECIAL REINFORCED BRIDGE APPROACH FILL TO ELEVATION 8.3'± AT END BENT NO. 1 AND 8.5'± AT END BENT NO. 2. OBSERVE A TWO MONTH WAITING PERIOD. MAINTAIN FILL ELEVATION DURING WAITING PERIOD.

8. DRIVE DEADMAN PILES FROM STA. 34+75.00 -L- TO STA. 40+73.53 -L- AND FROM STA. 54+77.96 -L- TO STA. 62+75.00 -L- AND INSTALL TIE RODS AND ASSEMBLIES FROM STA. 34+75.00 -L- TO STA. 41+05.25 -L- AND FROM STA. 54+44.75 -L- TO STA. 62+75.00 -L-.

9. CONSTRUCT SPECIAL REINFORCED BRIDGE APPROACH FILLS AT BOTH END BENTS TO THE TOP OF SUBGRADE ELEVATIONS.

10. CONSTRUCT EMBANKMENT WITH 2 FT OF SURCHARGE ABOVE FINAL GRADE. USE 2:1 (H:V) TEMPORARY FILL SLOPES FOR SURCHARGE. OBSERVE A TWO MONTH WAITING PERIOD. MAINTAIN FILL ELEVATION DURING WAITING PERIOD.

11. AFTER WAITING PERIODS END, DRIVE END BENT PILES.

12. REMOVE SURCHARGE AND EMBANKMENT FILL TO THE SUBGRADE ELEVATION.

13. FILL THE GAPS BETWEEN THE SPECIAL REINFORCED BRIDGE APPROACH FILL AND END BENT CAPS, EING WALLS AND SHEET PILINGS WITH SELECT MATERIAL CLASS III

14. CONSTRUCT CONCRETE COPING FOR WALL AS SHOWN ON THE PLANS.

PROJECT NO. B-4722B
CARTERET COUNTY
STATION: 47+75.00 -L-

SHEET 6 OF 6

NORTH CAROLINA PROFESSIONAL SEAL 22005 ENGINEER A. KEITH PASCHAL

DocuSigned by: A. Keith Paschal F8B6AD6DB2FC48F... 1/16/2015

STATE OF NORTH CAROLINA
DEPARTMENT OF TRANSPORTATION
RALEIGH

TIEBACK STEEL SHEET PILE RETAINING WALL

REVISIONS						SHEET NO.
NO.	BY:	DATE:	NO.	BY:	DATE:	W-6
1			3			TOTAL SHEETS
2			4			7

DRAWN BY : B. N. BARODAWALA DATE : 10-12-14
CHECKED BY : D. G. ELY DATE : 11-26-14
DESIGN ENGINEER OF RECORD: A. K. PATEL DATE : 12-9-14

16-JAN-2015 15:11
R:\structures\FinalPlans\B4722B_SHEET PILE WALL.dgn
kpaschal