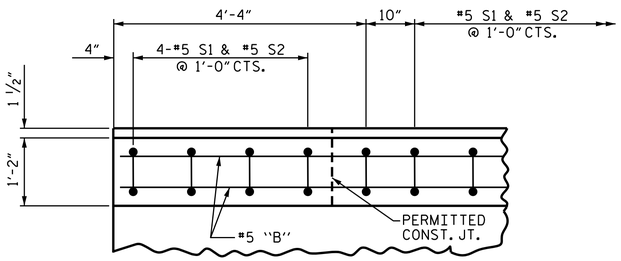

PLAN OF PARAPET

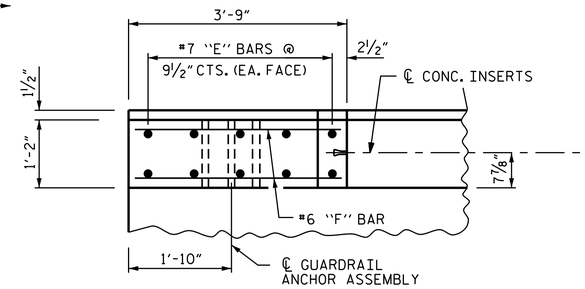

PLAN OF END POST

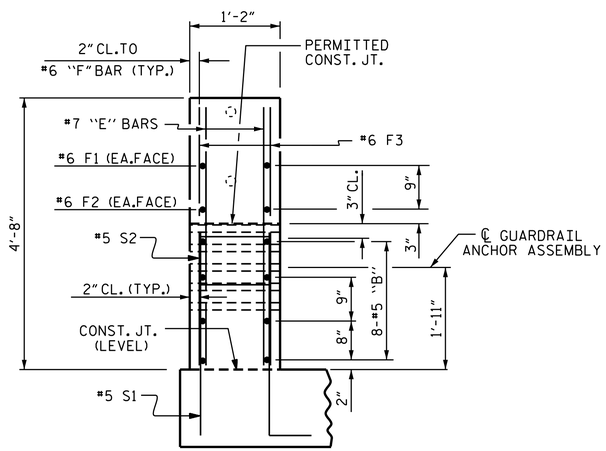

END VIEW

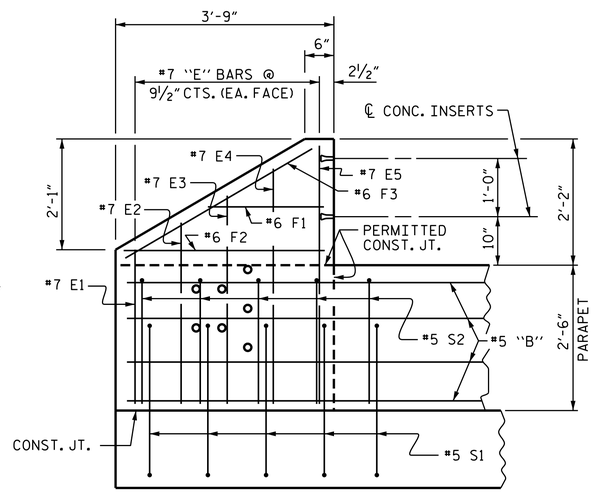

ELEVATION

PARAPET AND END POST FOR TWO BAR RAIL

BAR TYPES

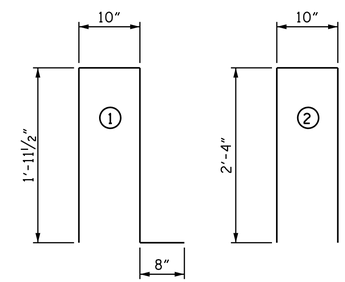

ALL BAR DIMENSIONS ARE OUT TO OUT.

BILL OF MATERIAL FOR PARAPETS AND END POSTS

BAR	NO.	SIZE	TYPE	LENGTH	WEIGHT
✳ B1	32	#5	STR	29'-2"	973
✳ B2	688	#5	STR	29'-6"	21169
✳ E1	8	#7	STR	2'-6"	41
✳ E2	8	#7	STR	3'-0"	49
✳ E3	8	#7	STR	3'-6"	57
✳ E4	8	#7	STR	4'-0"	65
✳ E5	8	#7	STR	4'-4"	71
✳ F1	8	#6	STR	1'-10"	22
✳ F2	8	#6	STR	3'-0"	36
✳ F3	8	#6	STR	3'-6"	42
✳ S1	2700	#5	1	5'-5"	15254
✳ S2	2700	#5	2	5'-6"	15489
✳ EPOXY COATED REINF. STEEL				LBS.	53,268
CLASS AA CONCRETE				CU. YDS.	292.4
TOTAL LIN. FT. OF CONCRETE PARAPET					2698.67

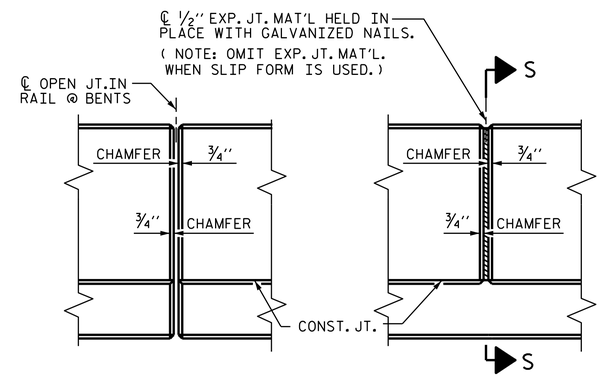

ELEVATION AT EXPANSION JOINTS

NOTES

FOR DETAIL OF CONCRETE INSERT AND GUARDRAIL ANCHOR ASSEMBLY, SEE "RAIL POST SPACINGS AND END OF RAIL DETAIL" SHEETS.

ALL REINFORCING STEEL IN PARAPETS AND END POSTS SHALL BE EPOXY COATED.

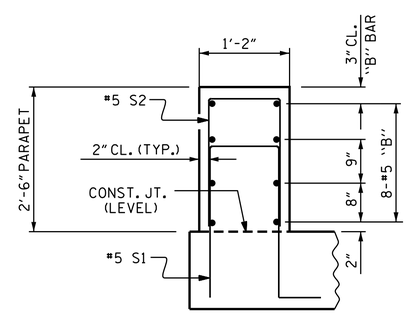

SECTION THRU PARAPET

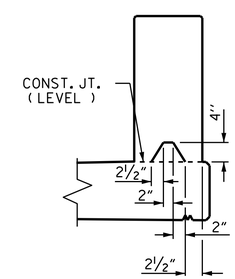

SECTION S-S

AT DAM IN OPEN JOINT
(THIS IS TO BE USED ONLY
WHEN SLIP FORM IS USED)

PARAPET DETAILS

PROJECT NO. B-4722B

CARTERET COUNTY

STATION: 47+75.00 -L-

SHEET 6 OF 6

STATE OF NORTH CAROLINA
DEPARTMENT OF TRANSPORTATION
RALEIGH

SUPERSTRUCTURE

1'-2" X 2'-6"
CONCRETE PARAPET

NORTH CAROLINA PROFESSIONAL SEAL 22005 ENGINEER A. KEITH PASCHAL

DocuSigned by: A. Keith Paschal F8B6AD6DB2FC48F... 1/16/2015

REVISIONS							SHEET NO.
NO.	BY:	DATE:	NO.	BY:	DATE:		S-27
1			3				TOTAL SHEETS
2			4				45

DRAWN BY : D. G. ELY DATE : 2/14
CHECKED BY : B. N. BARODAWALA DATE : 5/14
DESIGN ENGINEER OF RECORD : M. M. AHMED DATE : 10/14/14

16-JAN-2015 15:10
R:\structures\Final Plans\B4722B_sd_BR.dgn
kpaschal