5/14/99

ELECTRICAL DESIGN BY:
DIBBLE & PLEDGER, P.A.
222 WEST MAIN STREET, WASHINGTON N.C. 27889
PHONE : (252) 946-3320 FAX: (252) 946-5160
E-MAIL: rpledger@dibbleandpledger.com

PROJECT REFERENCE NO.	SHEET NO.
B-4722B	UC-6
DESIGNED BY: REP	
DRAWN BY: WAW	
CHECKED BY: REP	
APPROVED BY: REP	
REVISED: REP	
NORTH CAROLINA DEPARTMENT OF TRANSPORTATION	
UTILITIES ENGINEERING SEC. PHONE: (919)707-6690 FAX: (919)250-4151	12/12/2014 UTILITY CONSTRUCTION PLANS ONLY

NORTH CAROLINA PROFESSIONAL SEAL ENGINEER RONALD E. PLEDGER 12/12/2014

UTILITY CONSTRUCTION

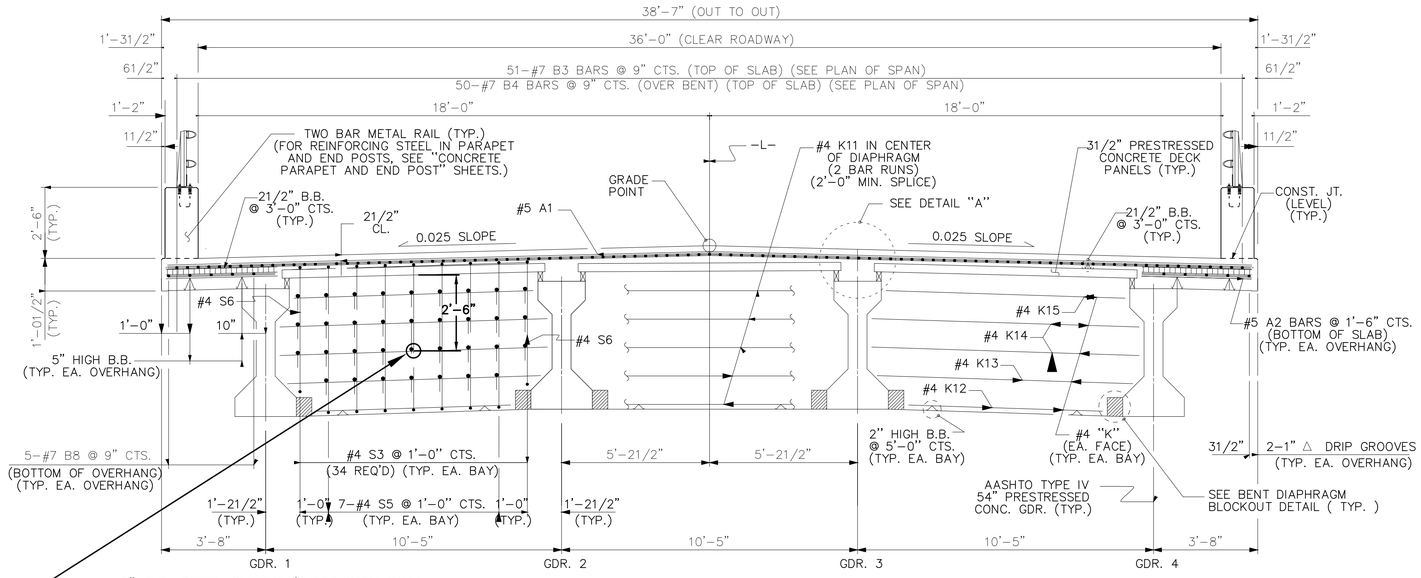

6" O.D. STEEL SLEEVE (0.266 INCH WALL THICKNESS) TO BE FLUSH WITH BOTH FACES OF BACK WALL. FIELD BEND REINFORCING STEEL AS NECESSARY TO PROVIDE FOR SLEEVE. SLEEVE SHALL BE PLACED PARALLEL TO GIRDERS.

TYPICAL SECTION AT CONTINUOUS BENTS

(AT BENTS 1, 2, 4, 5, 7, 8, 10, 11, 13 & 14)

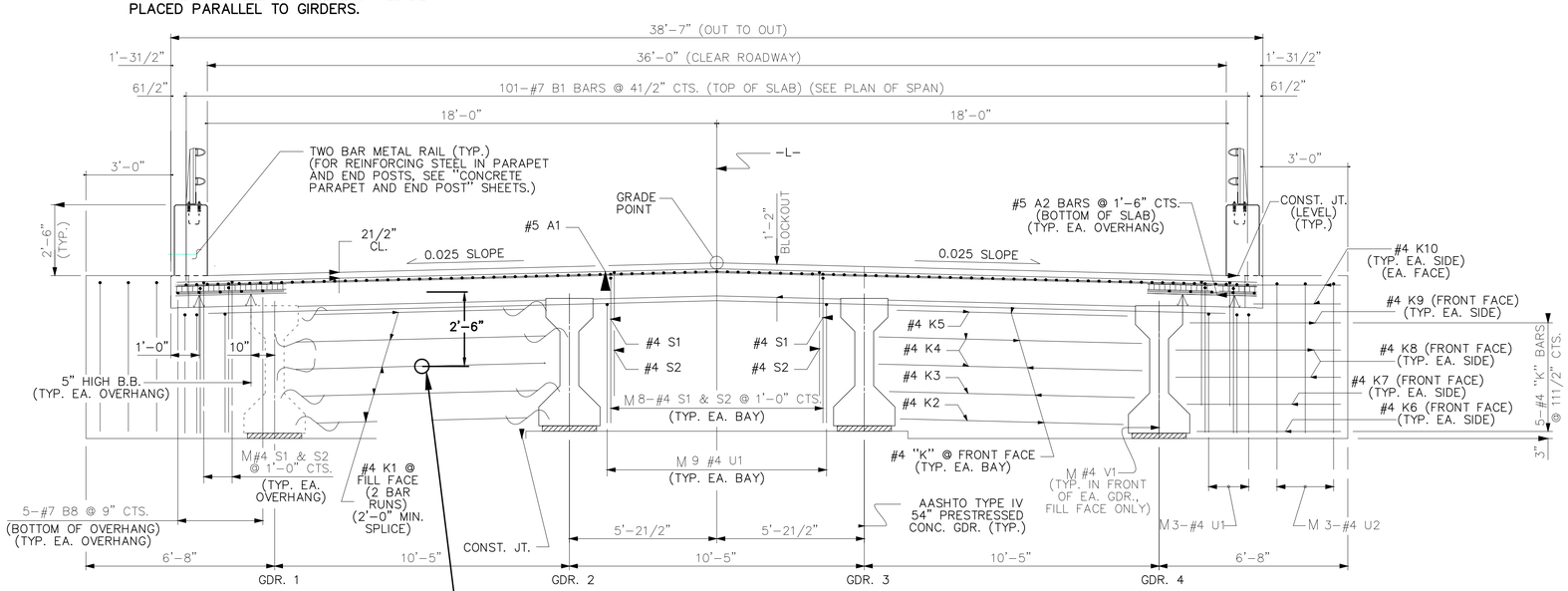

6" O.D. STEEL SLEEVE (0.266 INCH WALL THICKNESS) TO BE FLUSH WITH BOTH FACES OF BACK WALL. FIELD BEND REINFORCING STEEL AS NECESSARY TO PROVIDE FOR SLEEVE. SLEEVE SHALL BE PLACED PARALLEL TO GIRDERS.

TYPICAL SECTION AT INTEGRAL END BENTS

M#4 S1, #4 S2, #4 U1, #4 U2 & #4 V1 BARS TO MATCH #4 "V" BARS IN INTEGRAL END BENT CAP.

NOTES

LONGITUDINAL STEEL MAY BE SHIFTED SLIGHTLY, AS NECESSARY, TO AVOID INTERFERENCE WITH STIRRUPS IN PRESTRESSED CONCRETE GIRDERS.

PREVIOUSLY CAST CONCRETE IN A CONTINUOUS UNIT SHALL HAVE ATTAINED A MINIMUM COMPRESSIVE STRENGTH OF 3,000 PSI BEFORE ADDITIONAL CONCRETE IS CAST IN THE UNIT.

PRESTRESSED CONCRETE GIRDERS ARE DESIGNED FOR 0 PSI TENSION IN THE PRECOMPRESSED TENSILE ZONE UNDER ALL LOADING CONDITIONS.

PRESTRESSED CONCRETE GIRDERS, AND PRESTRESSED CONCRETE DECK PANELS SHALL CONTAIN CALCIUM NITRITE CORROSION INHIBITOR. SEE SPECIAL PROVISIONS FOR CALCIUM NITRITE CORROSION INHIBITOR.

THE CONCRETE PARAPET IN A CONTINUOUS UNIT SHALL NOT BE CAST UNTIL ALL SLAB CONCRETE IN THE UNIT HAS BEEN CAST AND HAS REACHED A MINIMUM COMPRESSIVE STRENGTH OF 3,000 PSI.

PRESTRESSED CONCRETE PANELS SHALL BE DESIGNED FOR AN ALLOWABLE TENSILE STRESS OF 0 PSI IN THE PRECOMPRESSED TENSILE ZONE UNDER ALL LOADING CONDITIONS.

THE CLASS AA CONCRETE IN THE BRIDGE DECK SHALL CONTAIN FLY ASH OR GROUND GRANULATED BLAST FURNACE SLAG AT THE SUBSTITUTION RATE SPECIFIED IN ARTICLE 1024-1 AND IN ACCORDANCE WITH ARTICLES 1024-5 AND 1024-6 OF THE STANDARD SPECIFICATIONS. NO PAYMENT WILL BE MADE FOR THIS SUBSTITUTION AS IT IS CONSIDERED INCIDENTAL TO THE COST OF THE REINFORCED CONCRETE DECK SLAB.

ALL BAR SUPPORTS USED IN THE CONCRETE PARAPET, DECK AND ALL INCIDENTAL REINFORCING STEEL SHALL BE EPOXY COATED IN ACCORDANCE WITH THE STANDARD SPECIFICATIONS.

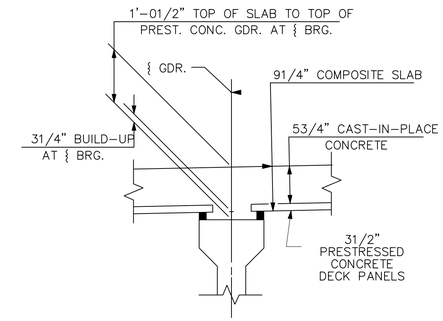

DETAIL "A"

PROJECT NO. B-4722B
CARTERET COUNTY
STATION: 47+75.00 -L-

SHEET 7 OF 7

STATE OF NORTH CAROLINA
DEPARTMENT OF TRANSPORTATION
RALEIGH

TYPICAL BENT SECTION

BRIDGE OVER NORTH RIVER ON US 70 BETWEEN BEAUFORT AND BETTIE

REVISIONS						SHEET NO.
NO.	BY:	DATE:	NO.	BY:	DATE:	UC-6
1			3			TOTAL SHEETS
2			4			7

DRAWN BY: WAW DATE: 12-2-2014
CHECKED BY: REP DATE: 12-2-2014