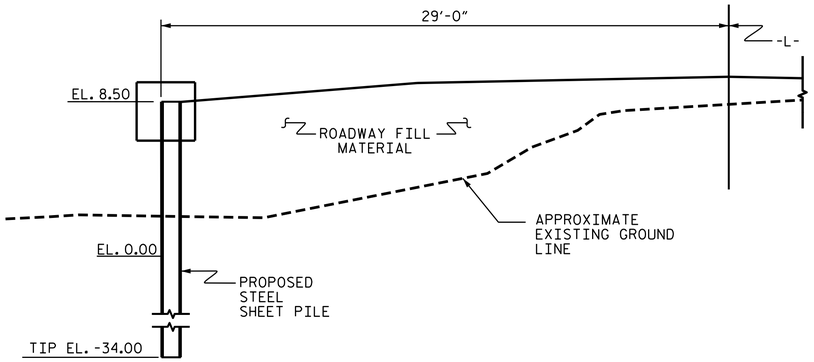

SECTION A-A

AT STA. 34+00.00 -L- TO 34+75.00 -L-

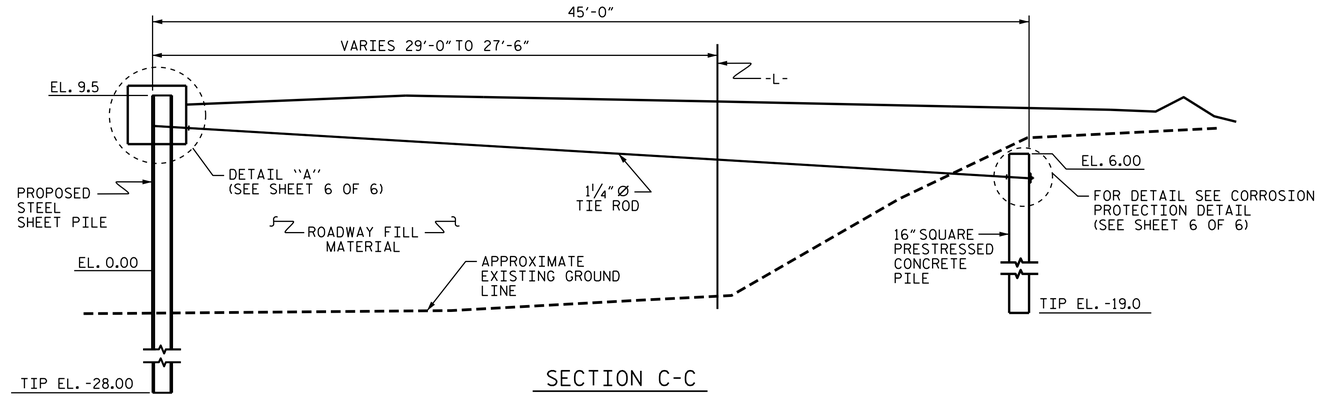

SECTION C-C

AT STA. 36+75.00 -L- TO 39+50.00 -L-

(PVC TUBE NOT SHOWN FOR CLARITY)

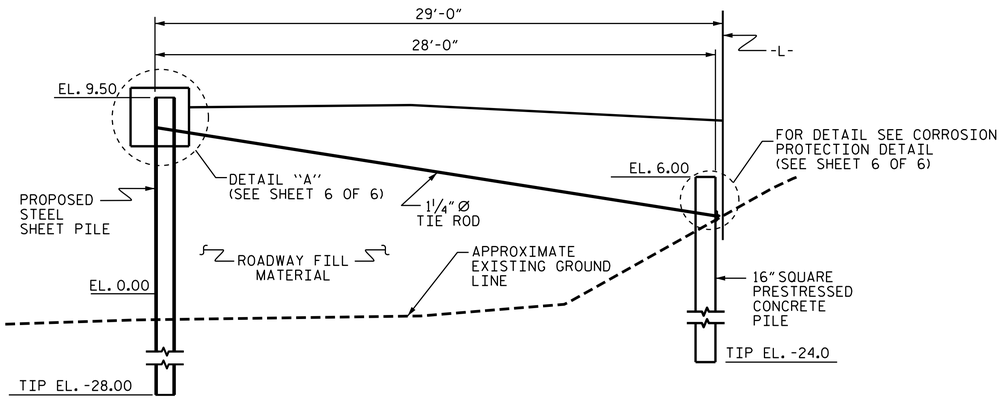

SECTION B-B

AT STA. 34+75.00 -L- TO 36+75.00 -L-

(PVC TUBE NOT SHOWN FOR CLARITY)

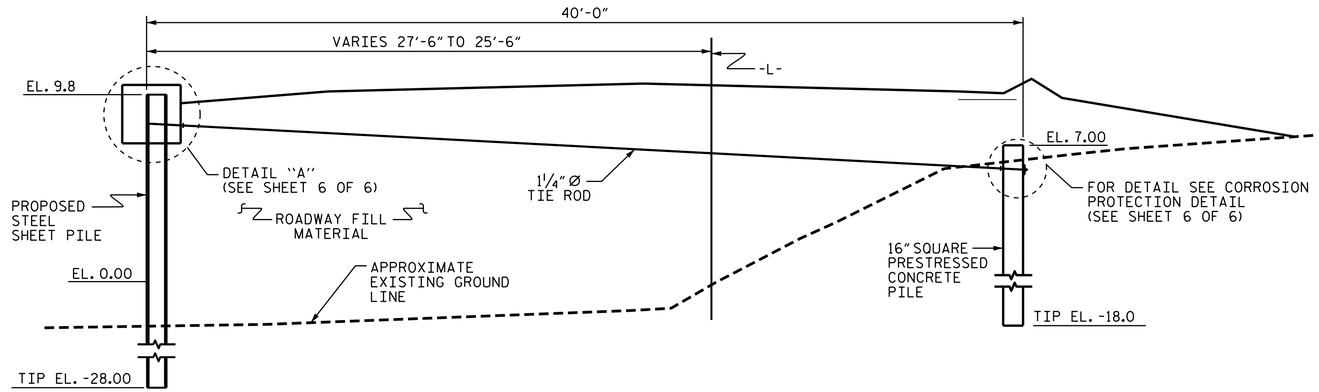

SECTION D-D

AT STA. 39+50.00 -L- TO 40+73.53 -L-

(PVC TUBE NOT SHOWN FOR CLARITY)

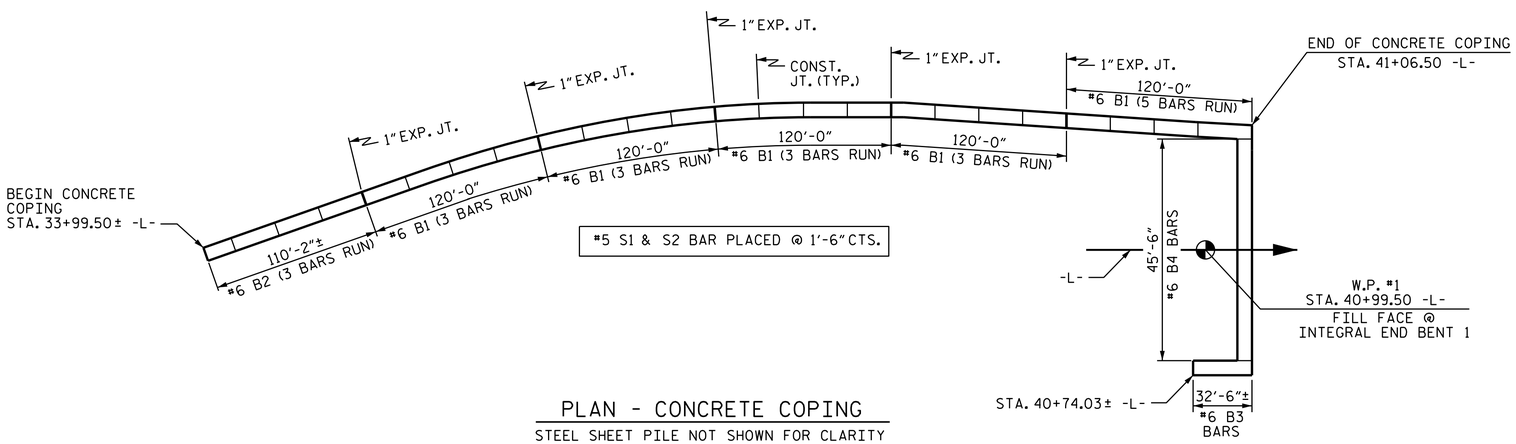

PLAN - CONCRETE COPING

STEEL SHEET PILE NOT SHOWN FOR CLARITY

PROJECT NO. B-4722B

CARTERET COUNTY

STATION: 47+75.00 -L-

SHEET 3 OF 6

STATE OF NORTH CAROLINA
DEPARTMENT OF TRANSPORTATION
RALEIGH

TIEBACK STEEL SHEET PILE RETAINING WALL 1

NORTH CAROLINA PROFESSIONAL SEAL 22005 ENGINEER A. KEITH PASCHAL

DocuSigned by: A. Keith Paschal F8B6AD6DB2FC48F... 1/24/2015

REVISIONS								SHEET NO.
NO.	BY:	DATE:	NO.	BY:	DATE:			W-3
1			3					TOTAL SHEETS
2			4					7

DRAWN BY : B. N. BARODAWALA DATE : 10-12-14
CHECKED BY : D. G. ELY DATE : 11-26-14
DESIGN ENGINEER OF RECORD: A. K. PATEL DATE : 12-9-14

24-JAN-2015 11:08
R:\structures\Final Plans\B4722B_SHEET PILE WALL.dgn
kpaschal