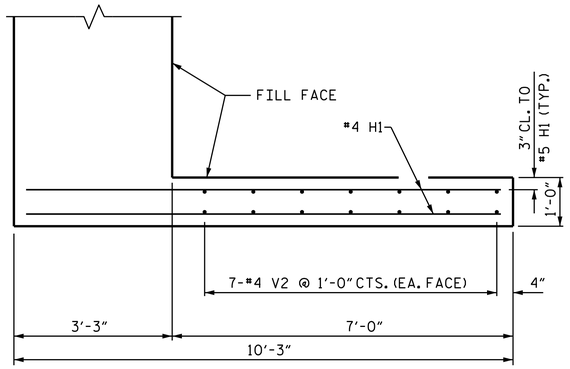

PLAN OF WING (W1)

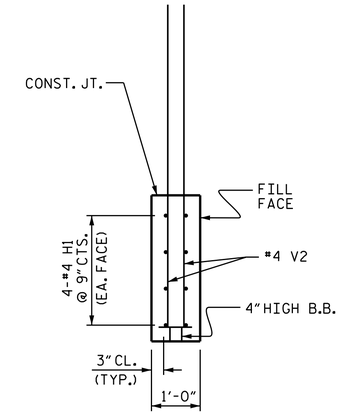

SECTION Y-Y

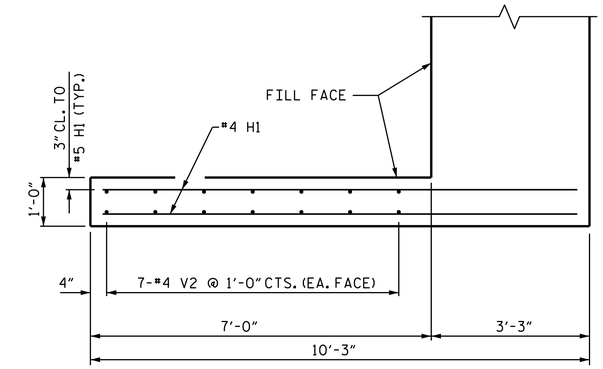

PLAN OF WING (W2)

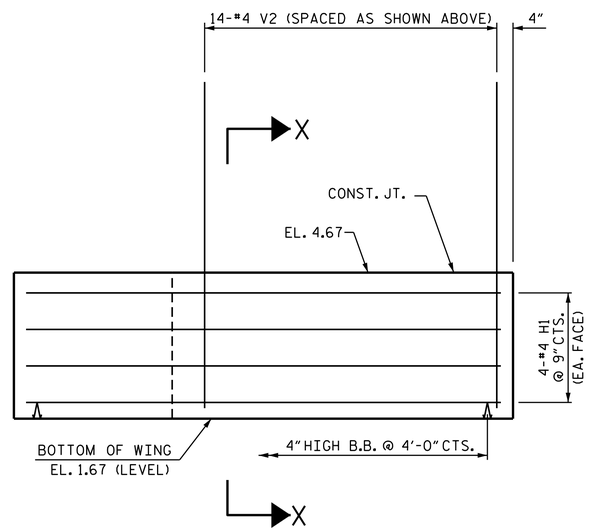

ELEVATION OF WING (W1)

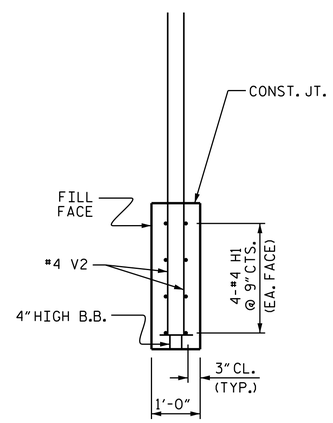

SECTION X-X

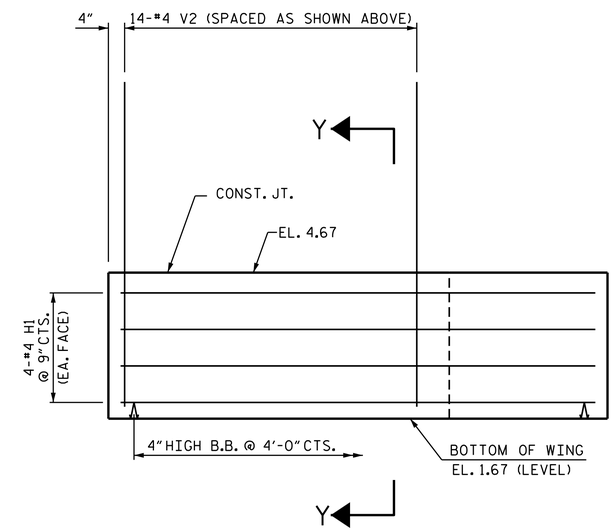

ELEVATION OF WING (W2)

PROJECT NO. B-4722B

CARTERET COUNTY

STATION: 47+75.00 -L-

SHEET 2 OF 3

STATE OF NORTH CAROLINA
DEPARTMENT OF TRANSPORTATION
RALEIGH

SUBSTRUCTURE

INTEGRAL END BENT 1

NORTH CAROLINA PROFESSIONAL SEAL 22005 ENGINEER A. KEITH PASCHAL

DocuSigned by: A. Keith Paschal F8B6AD6DB2FC48F... 1/16/2015

REVISIONS								SHEET NO.
NO.	BY:	DATE:	NO.	BY:	DATE:			S-34
1			3					TOTAL SHEETS
2			4					45

DRAWN BY : D. G. ELY DATE : 9/9/14
CHECKED BY : B. N. BARODAWALA DATE : 10/2014
DESIGN ENGINEER OF RECORD: O. PUIGCERVER DATE : 11/5/14

16-JAN-2015 15:10
R:\structures\Final Plans\B4722B_INTEGRAL_EBT.dgn
kpaschal