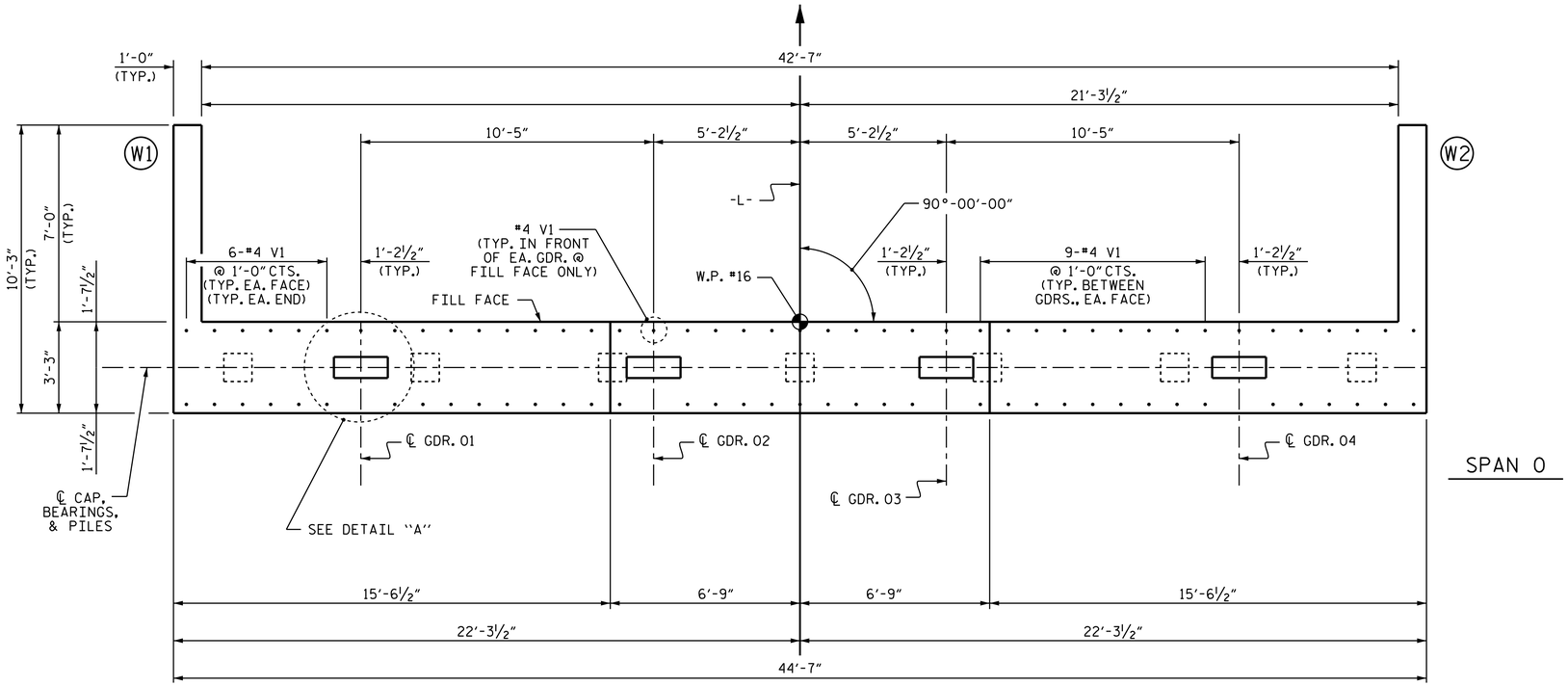

SPAN 0

PLAN

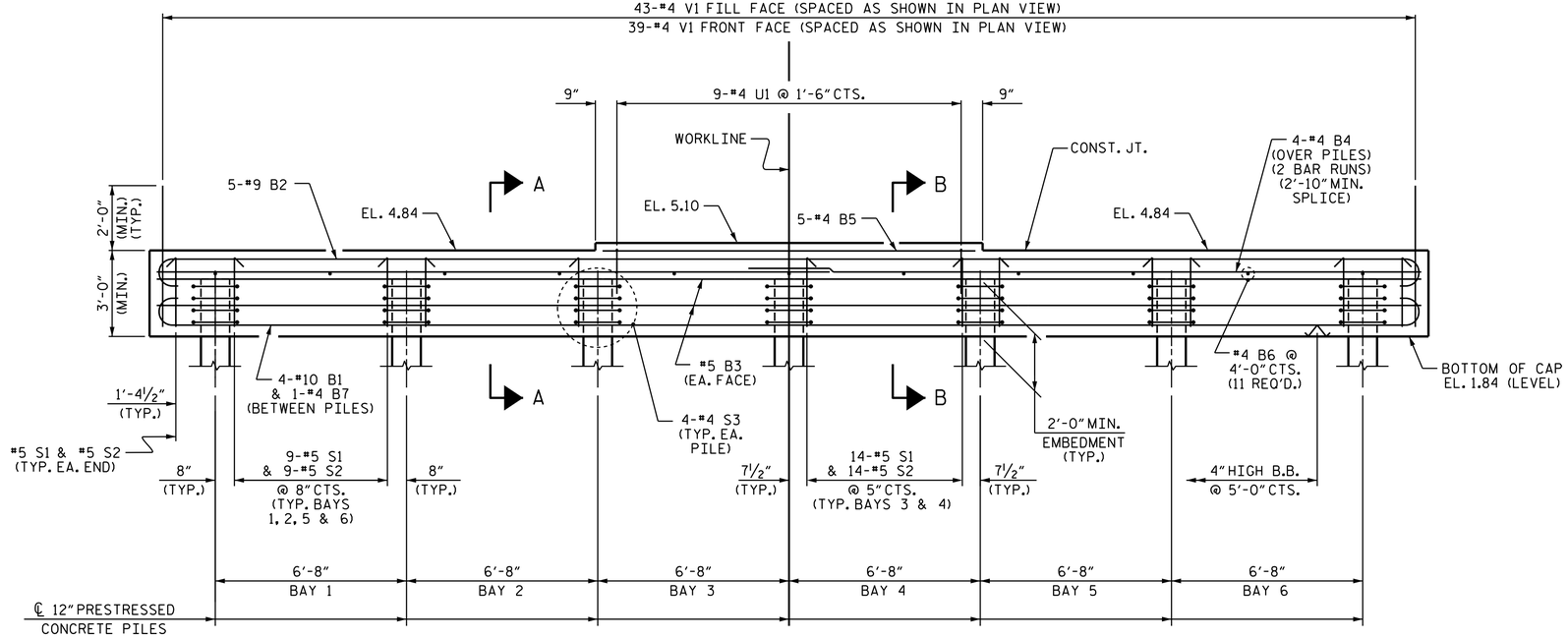

ELEVATION

NOTES

STIRRUPS IN CAP MAY BE SHIFTED AS NECESSARY TO CLEAR #4 V1 BARS.

THE TOP PART OF THE END BENT CAP, EXCEPT THE BEARING AREA, SHALL BE RAKED TO A DEPTH OF ¼".

THE UPPER PORTION OF THE INTEGRAL END BENT CAP SHALL BE POURED WITH THE SUPERSTRUCTURE. SEE SUPERSTRUCTURE PLANS.

THE CONTRACTOR SHALL BE RESPONSIBLE FOR TEMPORARY DRAINAGE AND EROSION CONTROL AT THE END BENT.

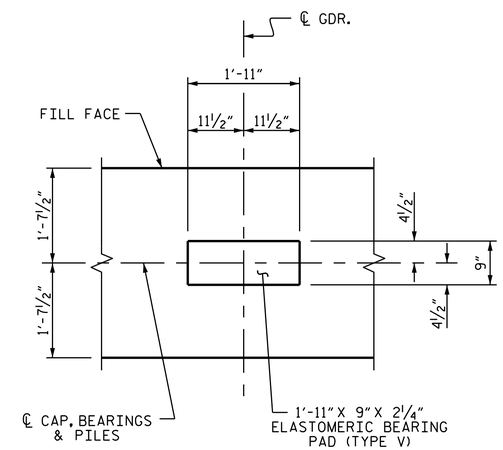

DETAIL "A"

(DETAILS AND DIMENSIONS ARE TYPICAL FOR EACH BEARING)

PROJECT NO. B-4722B

CARTERET COUNTY

STATION: 47+75.00 -L-

SHEET 1 OF 3

STATE OF NORTH CAROLINA
DEPARTMENT OF TRANSPORTATION
RALEIGH

SUBSTRUCTURE

INTEGRAL END BENT 2

NORTH CAROLINA PROFESSIONAL SEAL 22005 ENGINEER A. KEITH PASCHAL

DocuSigned by: A. Keith Paschal F8B6AD6DB2FC48F... 1/16/2015

REVISIONS								SHEET NO.
NO.	BY:	DATE:	NO.	BY:	DATE:			S-40
1			3					TOTAL SHEETS
2			4					45

DRAWN BY :	D. G. ELY	DATE :	9/9/14
CHECKED BY :	B. N. BARODAWALA	DATE :	10/2014
DESIGN ENGINEER OF RECORD:	O. PUIGCERVER	DATE :	11/5/14

16-JAN-2015 15:10
R:\structures\Final Plans\B4722B_INTEGRAL_EBT.dgn
kpaschal