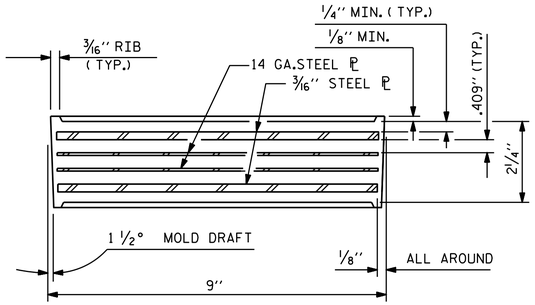

TYPICAL SECTION OF ELASTOMERIC BEARINGS

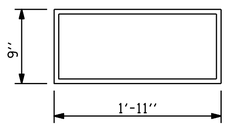

E4 (120 REQ'D)

PLAN VIEW OF ELASTOMERIC BEARING

TYPE V

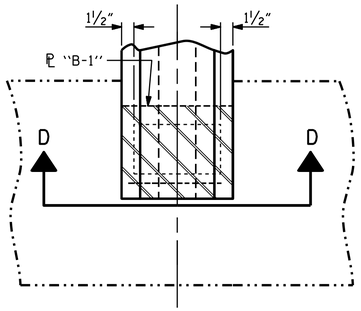

TYPICAL PLAN OF INTEGRAL END BENT

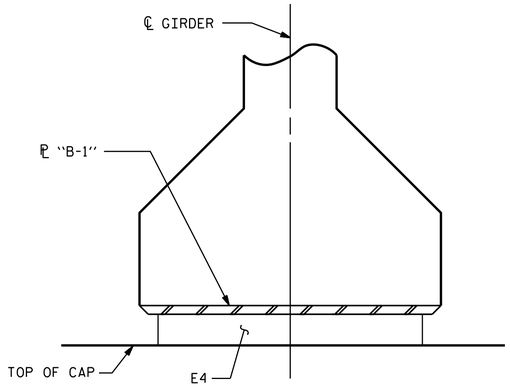

SECTION D-D
(AT INTEGRAL END BENTS)

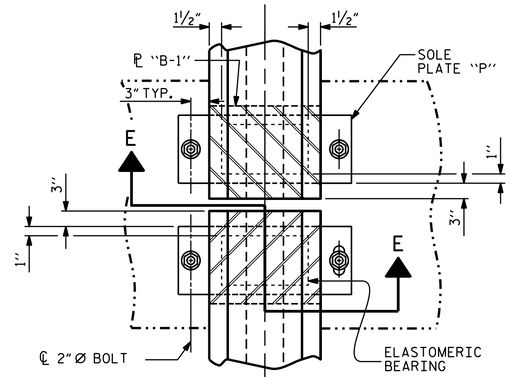

TYPICAL HALF-PLAN
(SHOWING CONTINUOUS BENT)

TYPICAL HALF-PLAN
(SHOWING SIMPLE SPAN BENT)

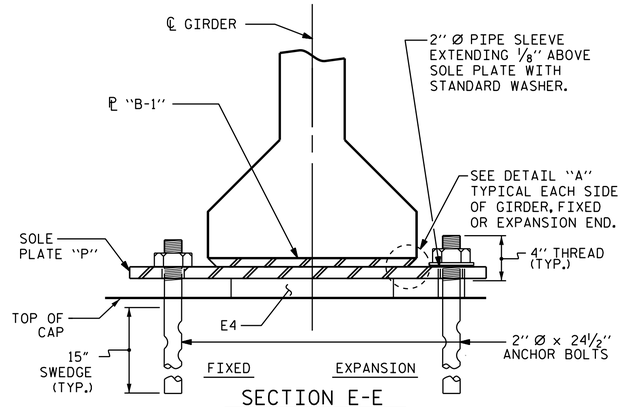

SECTION E-E

NOTES

AT ALL FIXED POINTS OF SUPPORT, NUTS FOR ANCHOR BOLTS ARE TO BE TIGHTENED FINGER TIGHT AND THEN BACKED OFF 1/2 TURN. THE THREAD OF THE NUT AND BOLT SHALL THEN BE BURRED WITH A SHARP POINTED TOOL.

THE 2" Ø PIPE SLEEVE SHALL BE CUT FROM SCHEDULE 40 PVC PLASTIC PIPE. THE PVC PLASTIC PIPE SHALL MEET THE REQUIREMENTS OF ASTM D1785.

STEEL SOLE PLATES, ANCHOR BOLTS, NUTS, AND WASHERS SHALL BE GALVANIZED IN ACCORDANCE WITH THE STANDARD SPECIFICATIONS.

PRIOR TO WELDING, GRIND THE GALVANIZED SURFACE OF THE PORTION OF THE EMBEDDED PLATE AND SOLE PLATE THAT ARE TO BE WELDED. AFTER WELDING, DAMAGED GALVANIZED SURFACES SHALL BE REPAIRED IN ACCORDANCE WITH THE STANDARD SPECIFICATIONS.

WHEN WELDING THE SOLE PLATE TO THE EMBEDDED PLATE IN THE GIRDER, USE TEMPERATURE INDICATING WAX PENS, OR OTHER SUITABLE MEANS, TO ENSURE THAT THE TEMPERATURE OF THE SOLE PLATE DOES NOT EXCEED 300°F. TEMPERATURES ABOVE THIS MAY DAMAGE THE ELASTOMER.

SOLE PLATE "P", BOLTS, NUTS, WASHERS, AND PIPE SLEEVE SHALL BE INCLUDED IN THE PAY ITEM FOR PRESTRESSED CONCRETE GIRDERS.

ANCHOR BOLTS SHALL MEET THE REQUIREMENTS OF ASTM A449. NUTS SHALL MEET THE REQUIREMENTS OF AASHTO M291-DH OR AASHTO M292-2H. WASHERS SHALL MEET THE REQUIREMENTS OF AASHTO M293. NO SHOP DRAWINGS ARE REQUIRED FOR ANCHOR BOLTS, NUTS AND WASHERS. SHOP INSPECTION IS REQUIRED.

ALL SURFACES OF BEARING PLATES SHALL BE SMOOTH AND STRAIGHT.

THE ELASTOMER IN THE STEEL REINFORCED BEARINGS SHALL HAVE A SHEAR MODULUS OF 0.160 KSI, IN ACCORDANCE WITH AASHTO M251.

FOR STEEL REINFORCED ELASTOMERIC BEARINGS, SEE SPECIAL PROVISIONS.

MAXIMUM ALLOWABLE SERVICE LOADS	
D.L.+L.L. (NO IMPACT)	
TYPE V	320 k

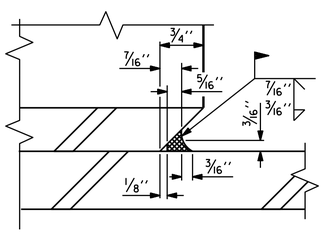

DETAIL "A"

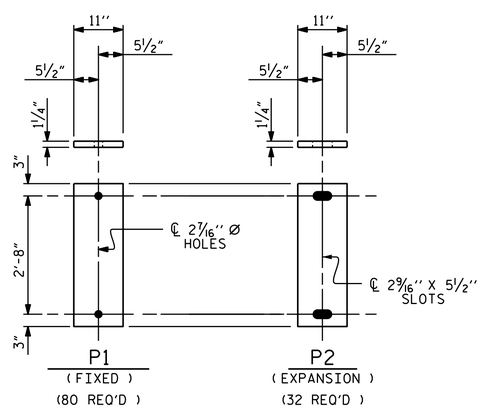

SOLE PLATE DETAILS ("P")

PROJECT NO. B-4722B
CARTERTET COUNTY
STATION: 47+75.00 -L-

STATE OF NORTH CAROLINA
DEPARTMENT OF TRANSPORTATION
RALEIGH

ELASTOMERIC BEARING DETAILS

PRESTRESSED CONCRETE GIRDER SUPERSTRUCTURE

NORTH CAROLINA PROFESSIONAL SEAL 22005 ENGINEER A. KEITH PASCHAL

DocuSigned by: A. Keith Paschal F8B6AD6DB2FC48F... 1/16/2015

REVISIONS						
NO.	BY:	DATE:	NO.	BY:	DATE:	
1			3			
2			4			

SHEET NO. S-21
TOTAL SHEETS 45

ASSEMBLED BY :	D. G. ELY	DATE : 10/14/14
CHECKED BY :	B. N. BARODAWALA	DATE : 11/3/14
DESIGN ENGINEER OF RECORD:	M. M. AHMED	DATE : 10/14/14

DRAWN BY :	EEM	2/97	REV. 5/1/06 TLA/GM
CHECKED BY :	VAP	2/97	REV. 10/1/11 MAA/GM
			REV. 6/13 AAC/MAA

16-JAN-2015 15:10
R:\structures\FinalPlans\B4722B_sd_BG.dgn
kpaschal

STD. NO. EB4 (SHT 1)