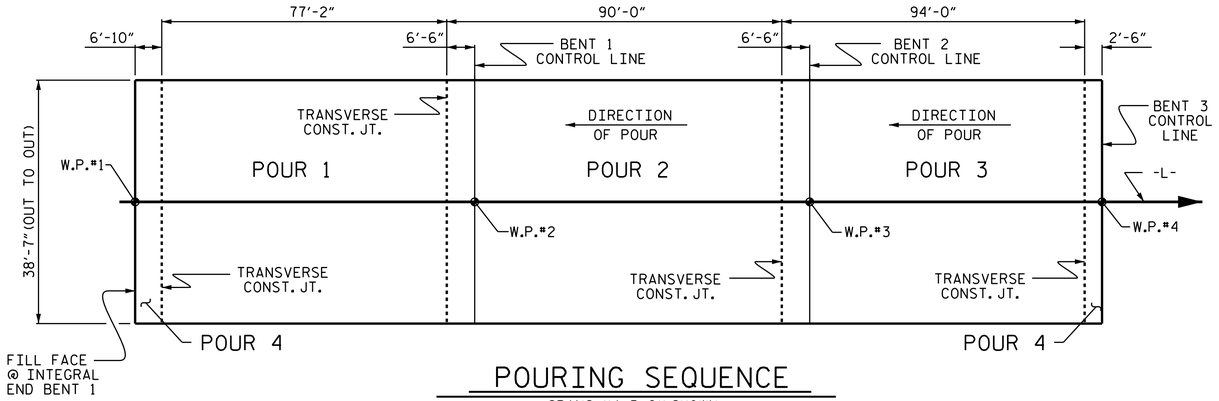

POURING SEQUENCE

SPANS "A-B-C" SHOWN.

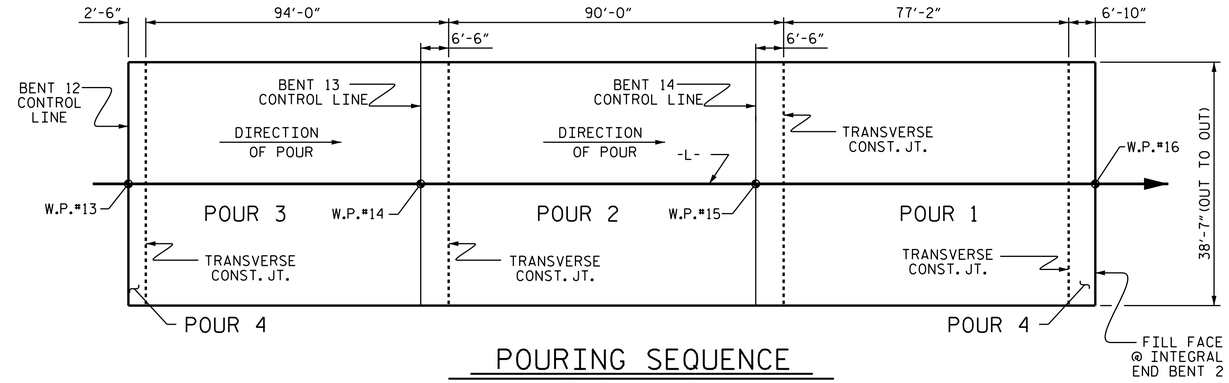

POURING SEQUENCE

SPANS "M-N-O" SHOWN

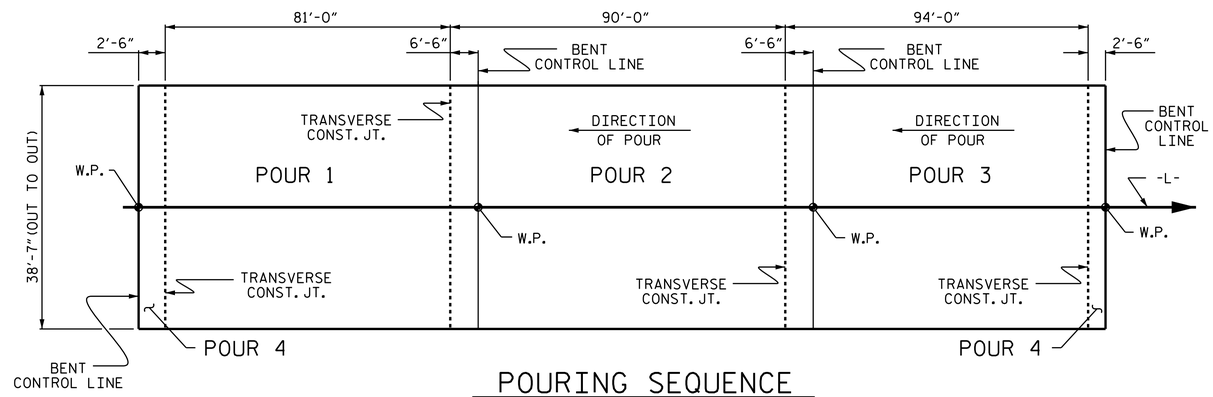

POURING SEQUENCE

ALL INTERIOR CONTINUOUS 3 SPAN SECTIONS SIMILAR

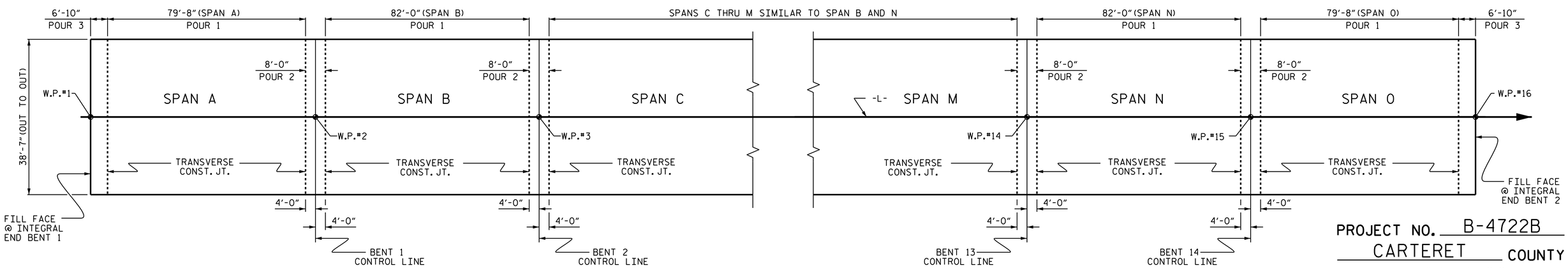

OPTIONAL POURING SEQUENCE

POUR 2 CANNOT BE STARTED UNTIL BOTH ADJACENT 1 POURS REACH A MINIMUM OF 3000 PSI.

PROJECT NO. B-4722B

CARTERET COUNTY

STATION: 47+75.00 -L-

STATE OF NORTH CAROLINA
DEPARTMENT OF TRANSPORTATION
RALEIGH

SUPERSTRUCTURE

CONCRETE DECK POUR DETAILS

NORTH CAROLINA PROFESSIONAL SEAL 22005 ENGINEER A. KEITH PASCHAL

DocuSigned by: A. Keith Paschal F8B6AD6DB2FC48F... 1/16/2015

ASSEMBLED BY :	D. G. ELY	DATE :	4/15/14
CHECKED BY :	B. N. BARODAWALA	DATE :	5/19/14
DESIGN ENGINEER OF RECORD:	M. M. AHMED	DATE :	10/14/14

DRAWN BY :	JMB 5/87	REV. 8/16/99	RWW/LES
CHECKED BY :	SJD 9/87	REV. 5/1/06	TLA/GM
		REV. 10/1/11	MAA/GM

REVISIONS

NO.	BY:	DATE:	NO.	BY:	DATE:
1			3		
2			4		

SHEET NO. S-31

TOTAL SHEETS 45