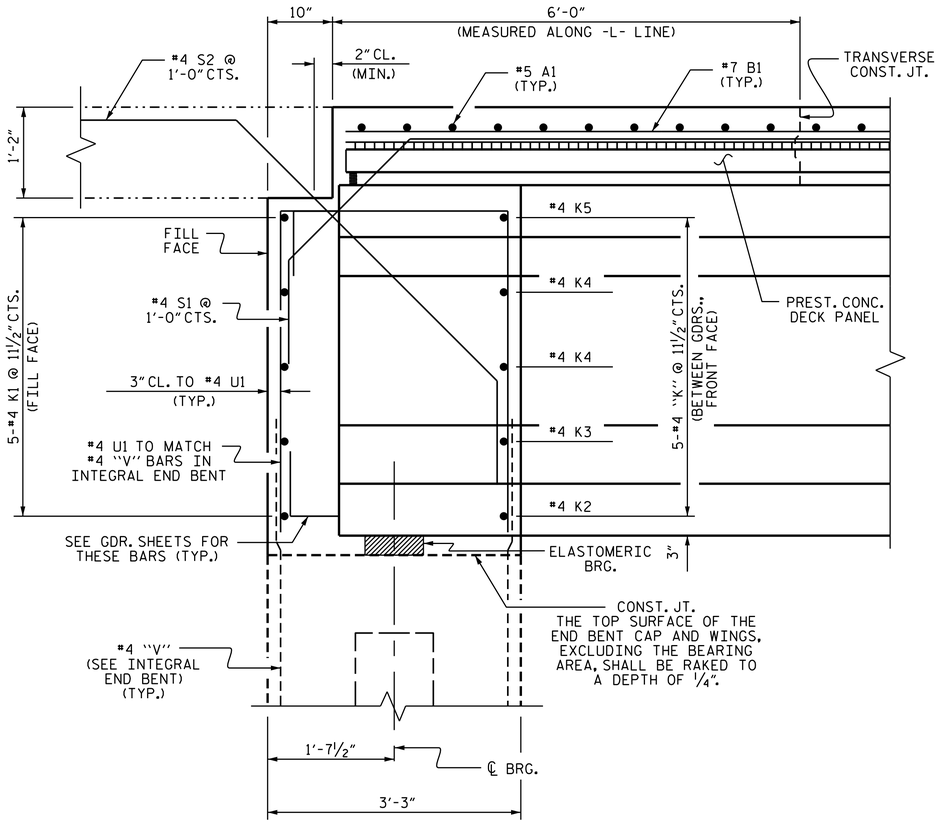

SECTION THRU INTEGRAL END BENT

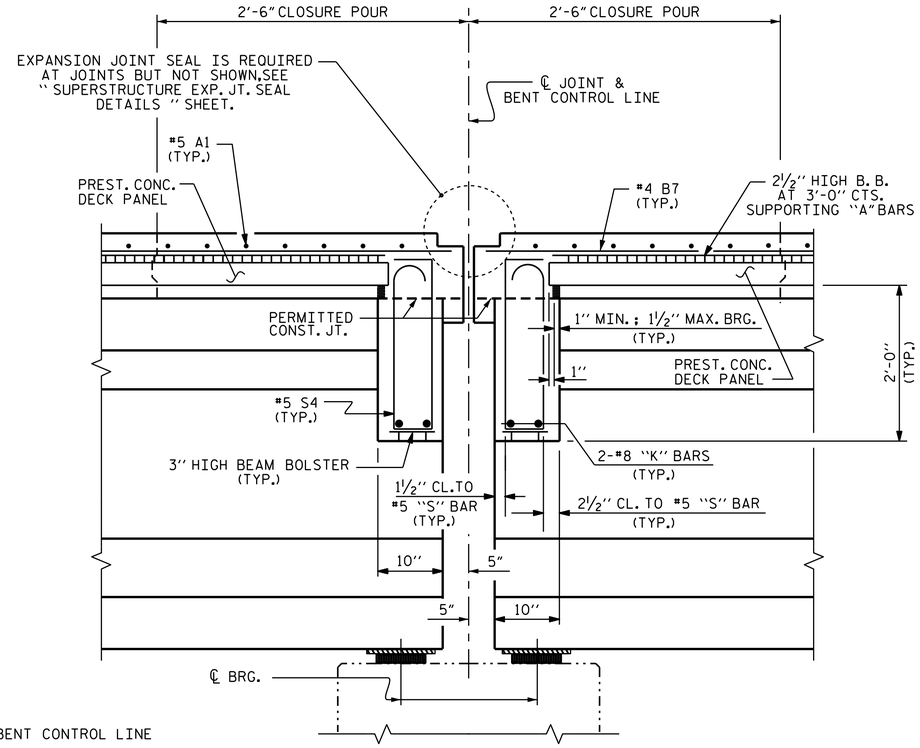

SECTION THRU BENT DIAPHRAGM

(BENTS 3, 6, 9 & 12)

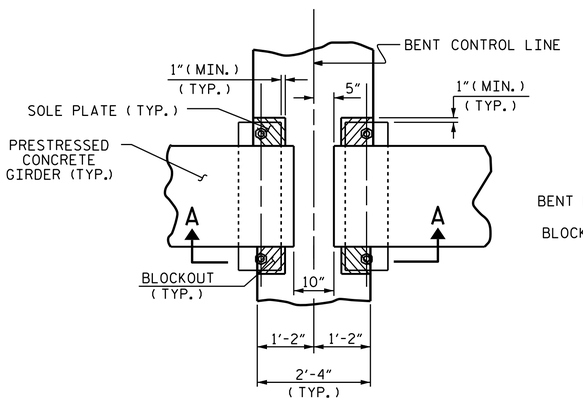

PLAN VIEW

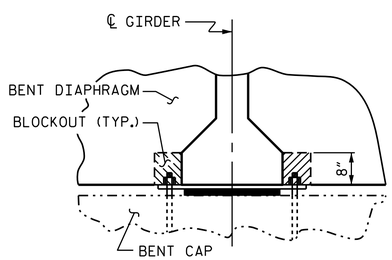

SECTION A-A

BENT DIAPHRAGM BLOCKOUT DETAIL

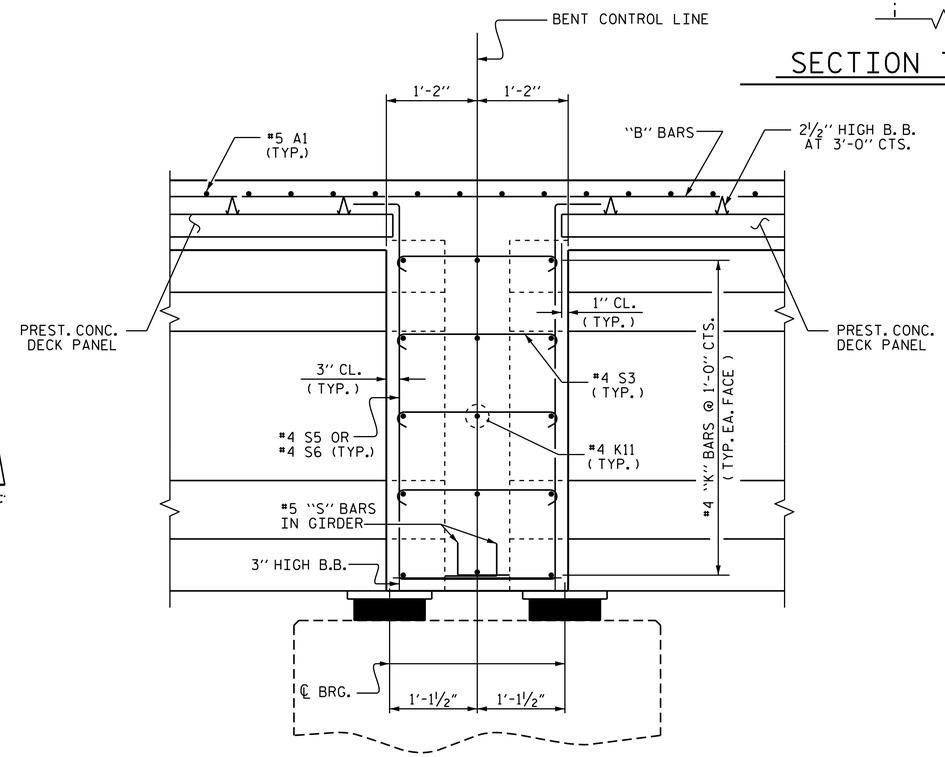

SECTION THRU CONTINUOUS BENT DIAPHRAGM

(BENTS 1, 2, 4, 5, 7, 8, 10, 11, 13, & 14)

PROJECT NO. B-4722B

CARTERET COUNTY

STATION: 47+75.00 -L-

SHEET 3 OF 3

STATE OF NORTH CAROLINA
DEPARTMENT OF TRANSPORTATION
RALEIGH

SUPERSTRUCTURE

TYPICAL SECTION

NORTH CAROLINA PROFESSIONAL SEAL 22005 ENGINEER A. KEITH PASCHAL

DocuSigned by: A. Keith Paschal FBB6AD6DB2FC48F... 1/16/2015

REVISIONS							SHEET NO.
NO.	BY:	DATE:	NO.	BY:	DATE:		S-10
1			3				TOTAL SHEETS
2			4				45

DRAWN BY :	D. G. ELY	DATE :	1/13/14
CHECKED BY :	B. N. BARODAWALA	DATE :	3/31/14
DESIGN ENGINEER OF RECORD:	M. M. AHMED	DATE :	10/14/14

16-JAN-2015 15:09
R:\structures\Final Plans\B4722B_TS.dgn
kpaschal