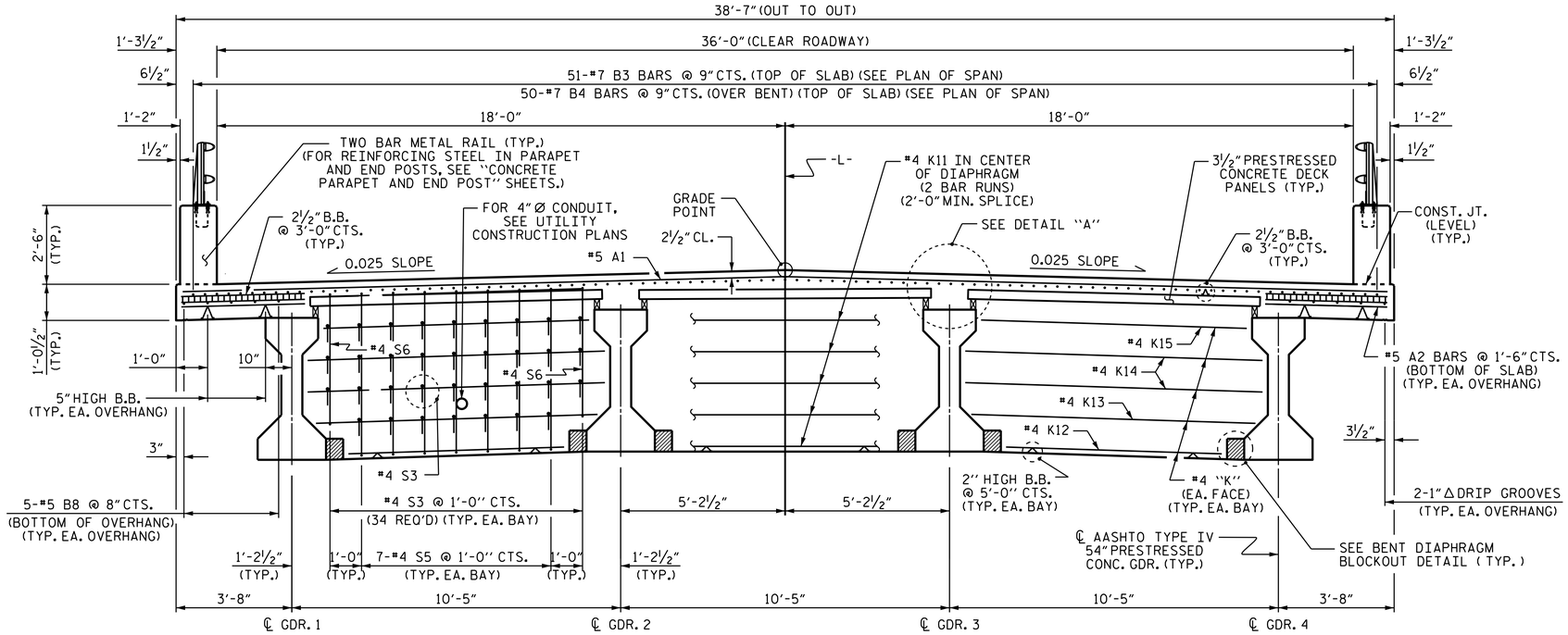

TYPICAL SECTION AT CONTINUOUS BENTS

(AT BENTS 1, 2, 4, 5, 7, 8, 10, 11, 13 & 14)

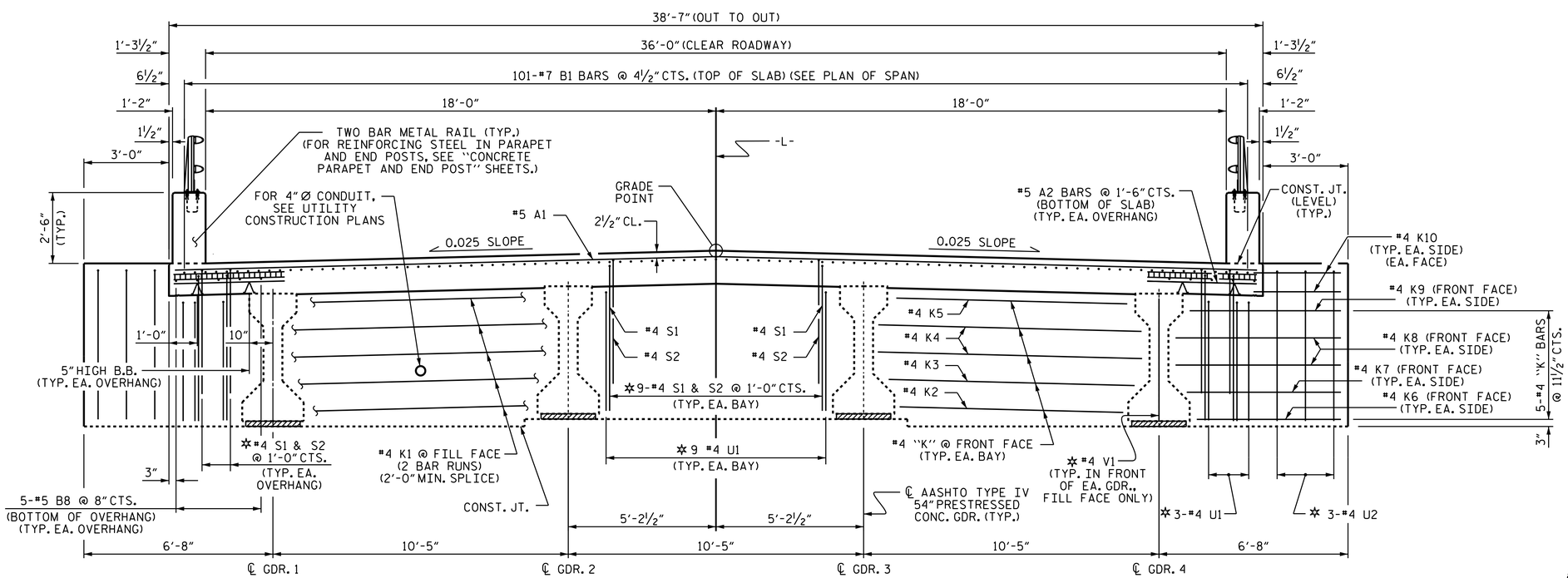

TYPICAL SECTION AT INTEGRAL END BENTS

✲ #4 S1, #4 S2, #4 U1, #4 U2 & #4 V1 BARS TO MATCH #4 "V" BARS IN INTEGRAL END BENT CAP.

NOTES

LONGITUDINAL STEEL MAY BE SHIFTED SLIGHTLY, AS NECESSARY, TO AVOID INTERFERENCE WITH STIRRUPS IN PRESTRESSED CONCRETE GIRDERS.

PREVIOUSLY CAST CONCRETE IN A CONTINUOUS UNIT SHALL HAVE ATTAINED A MINIMUM COMPRESSIVE STRENGTH OF 3,000 PSI BEFORE ADDITIONAL CONCRETE IS CAST IN THE UNIT.

THE CONCRETE PARAPET IN A CONTINUOUS UNIT SHALL NOT BE CAST UNTIL ALL SLAB CONCRETE IN THE UNIT HAS BEEN CAST AND HAS REACHED A MINIMUM COMPRESSIVE STRENGTH OF 3,000 PSI.

PRESTRESSED CONCRETE PANELS SHALL BE DESIGNED FOR AN ALLOWABLE TENSILE STRESS OF 0 PSI IN THE PRECOMPRESSED TENSILE ZONE UNDER ALL LOADING CONDITIONS.

ALL BAR SUPPORTS USED IN THE CONCRETE PARAPET, DECK AND ALL INCIDENTAL REINFORCING STEEL SHALL BE EPOXY COATED IN ACCORDANCE WITH THE STANDARD SPECIFICATIONS.

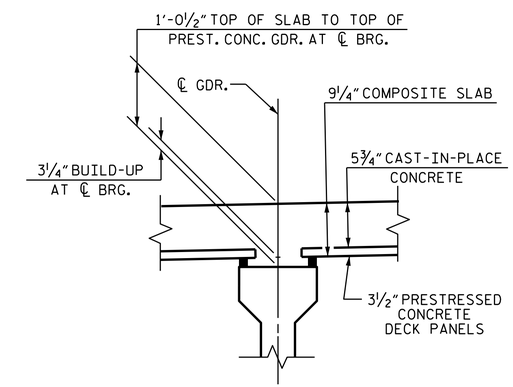

DETAIL "A"

PROJECT NO. B-4722B

CARTERET COUNTY

STATION: 47+75.00 -L-

SHEET 1 OF 3

STATE OF NORTH CAROLINA
DEPARTMENT OF TRANSPORTATION
RALEIGH

SUPERSTRUCTURE

TYPICAL SECTION

NORTH CAROLINA PROFESSIONAL SEAL 22005 ENGINEER A. KEITH PASCHAL

DocuSigned by: A. Keith Paschal F886AD6DB2FC48F...

1/16/2015

REVISIONS						
NO.	BY:	DATE:	NO.	BY:	DATE:	
1			3			
2			4			

SHEET NO. S-8

TOTAL SHEETS 45

DRAWN BY : D. G. ELY DATE : 1/9/14
CHECKED BY : B. N. BARODAWALA DATE : 3/31/14
DESIGN ENGINEER OF RECORD: M. M. AHMED DATE : 10/14/14

16-JAN-2015 15:09
R:\structures\Final Plans\B4722B_TS.dgn
kpaschal