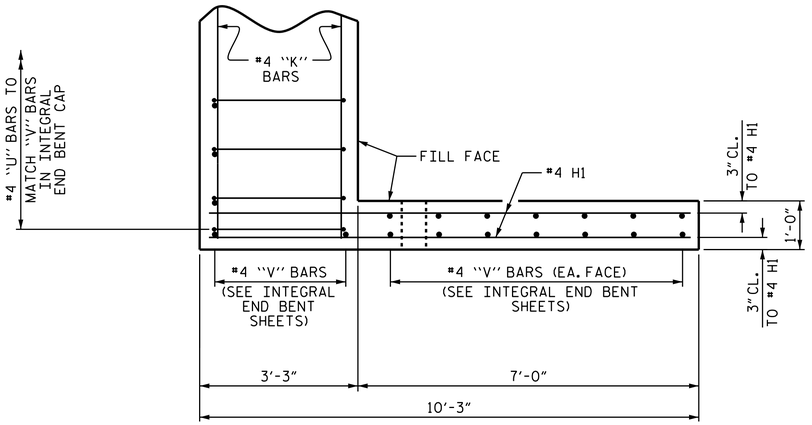

PLAN OF WING W1

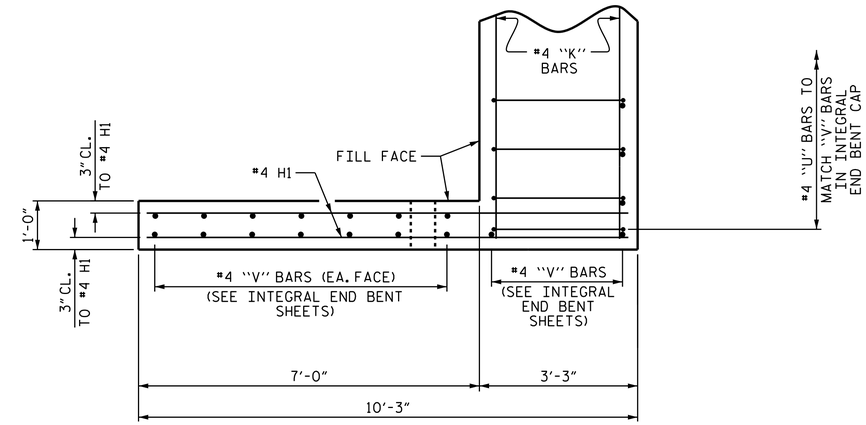

PLAN OF WING W2

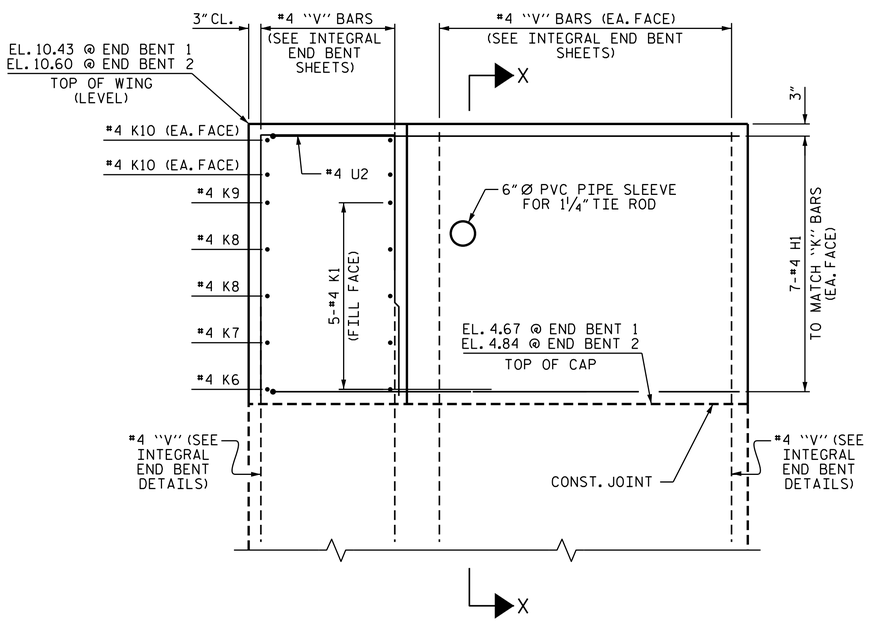

ELEVATION OF WING W1

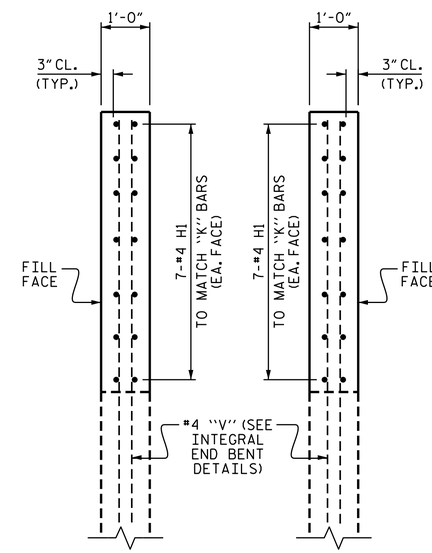

SECTION X-X

SECTION Y-Y

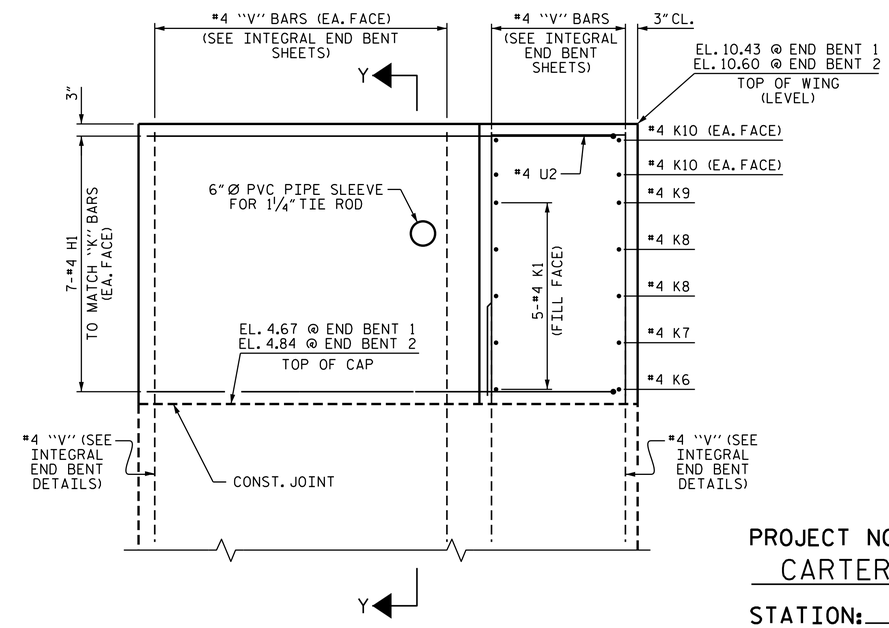

ELEVATION OF WING W2

ABUTMENT WINGS @ INTEGRAL END BENT

(FOR INTEGRAL END BENT REINFORCING STEEL AND DETAILS, SEE "SUBSTRUCTURE INTEGRAL END BENT" SHEETS.)

PROJECT NO. B-4722B
CARTERET COUNTY
STATION: 47+75.00 -L-

SHEET 4 OF 4

STATE OF NORTH CAROLINA
DEPARTMENT OF TRANSPORTATION
RALEIGH

SUPERSTRUCTURE

PLAN OF SPAN DETAILS

NORTH CAROLINA PROFESSIONAL SEAL 22005 ENGINEER A. KEITH PASCHAL

DocuSigned by: A. Keith Paschal F8B6AD6DB2FC48F... 1/16/2015

REVISIONS							SHEET NO.
NO.	BY:	DATE:	NO.	BY:	DATE:		S-15
1			3				TOTAL SHEETS
2			4				45

DRAWN BY : D. C. ELY DATE : 01/22/14
CHECKED BY : B. N. BARODAWALA DATE : 03/31/14
DESIGN ENGINEER OF RECORD: M. M. AHMED DATE : 10/14/14

16-JAN-2015 15:09
R:\structures\Final Plans\B4722B_sd_PS.dgn
kpaschal