PROJECT REFERENCE NO.	SHEET NO.
B-4722B	2G-5

GEOTECHNICAL ENGINEER

NORTH CAROLINA PROFESSIONAL SEAL 022246 ENGINEER SCOTT A. HIDDEN

DocuSigned by: Scott A. Hidden 1/9/2015
F760CAEB96FC4D3...

SIGNATURE DATE

ENGINEER

SIGNATURE DATE

EMBANKMENT MONITORING SEQUENCE

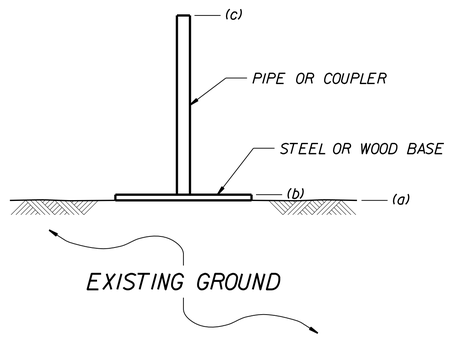

1. PLACE STEEL/WOOD BASE AT APPROXIMATE GAUGE LOCATIONS SHOWN IN THE PLANS AS DETERMINED BY THE ENGINEER.
2. SET BASE ON LEVEL GROUND SO PIPE/COUPLER IS PLUMB.
3. BEFORE CONSTRUCTING EMBANKMENT, NOTIFY ENGINEER TO SURVEY AND RECORD THE FOLLOWING:
   (a) EXISITING GROUND ELEVATION.
   (b) TOP OF BASE ELEVATION AND
   (c) TOP OF PIPE ELEVATION.

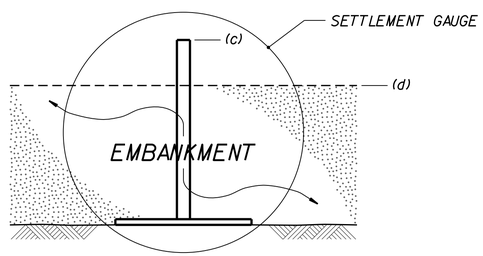

4. MAKE SETTLEMENT GAUGE HIGHLY VISIBLE SO GAUGE IS NOT HIT OR DAMAGED.
5. PLACE AND COMPACT FILL MATERIAL AROUND SETTLEMENT GAUGE WITHOUT DISTURBING GAUGE.
6. NOTIFY ENGINEER WEEKLY TO SURVEY AND RECORD THE FOLLOWING:
   (c) TOP OF PIPE ELEVATION AND
   (d) EMBANKMENT ELEVATION.

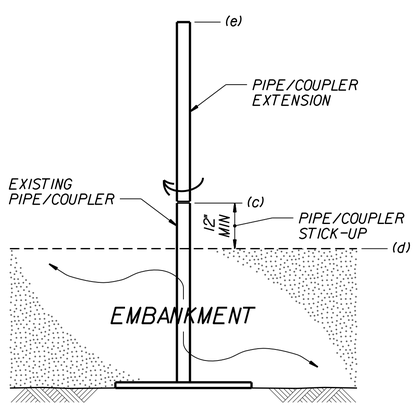

7. CONNECT PIPE/COUPLER EXTENSION TO EXISTING PIPE/COUPLER AS NEEDED TO MAINTAIN A PIPE/COUPLER STICK-UP OF AT LEAST 12" WHILE MONITORING SETTLEMENT.
8. SCREW PIPES/COUPLERS TOGETHER HAND TIGHT AND THEN TIGHTEN 2 TO 3 FULL TURNS WITH A WRENCH.
9. NOTIFY ENGINEER TO SURVEY AND RECORD THE FOLLOWING:
   (c) TOP OF PIPE ELEVATION.
   (d) EMBANKMENT ELEVATION AND
   (e) TOP OF EXTENSION ELEVATION.
10. RETURN TO STEP 4 WITH NEW TOP OF PIPE ELEVATION EQUAL TO TOP OF EXTENSION ELEVATION.

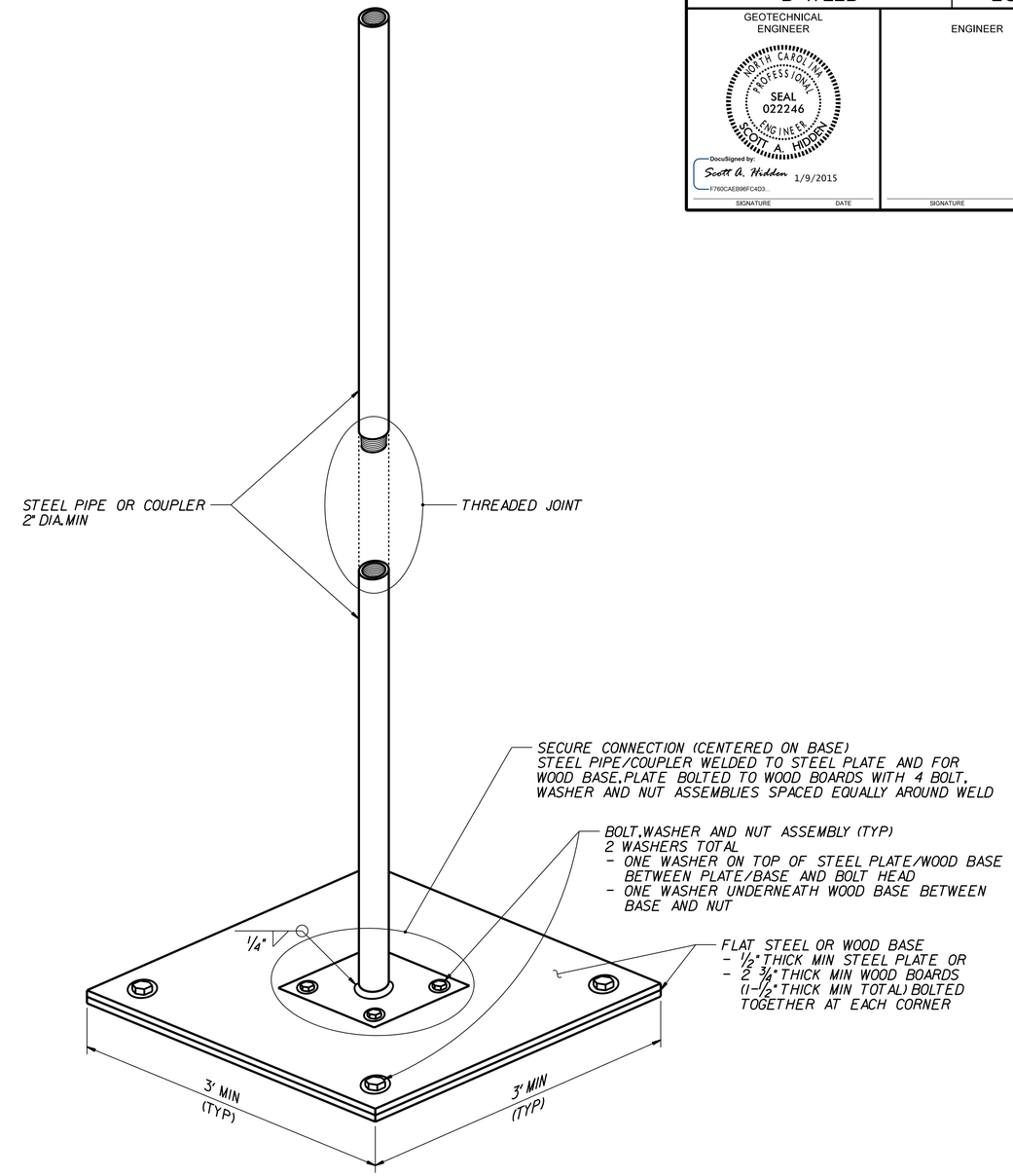

SETTLEMENT GAUGE

NOTES:

1. SEE ROADWAY SUMMARY SHEETS FOR APPROXIMATE SETTLEMENT GAUGE LOCATIONS.
2. FOR STANDARD EMBANKMENT MONITORING, SEE EMBANKMENT SETTLEMENT GAUGES PROVISION.
3. INSTALL SETTLEMENT GAUGES AFTER CLEARING AND GRUBBING GAUGE LOCATIONS AND BEFORE CONSTRUCTING EMBANKMENTS WITH EMBANKMENT MONITORING.

NORTH CAROLINA DEPARTMENT OF TRANSPORTATION
DIVISION OF HIGHWAYS

GEOTECHNICAL ENGINEERING UNIT

STANDARD DETAIL NO. 1804.01

STANDARD EMBANKMENT MONITORING

DATE: 2-19-13