PROJ. REFERENCE NO.	SHEET NO.
10CR.10131.38, ETC	TMP-4

SIGNING FOR ASPHALT SURFACE TREATMENT

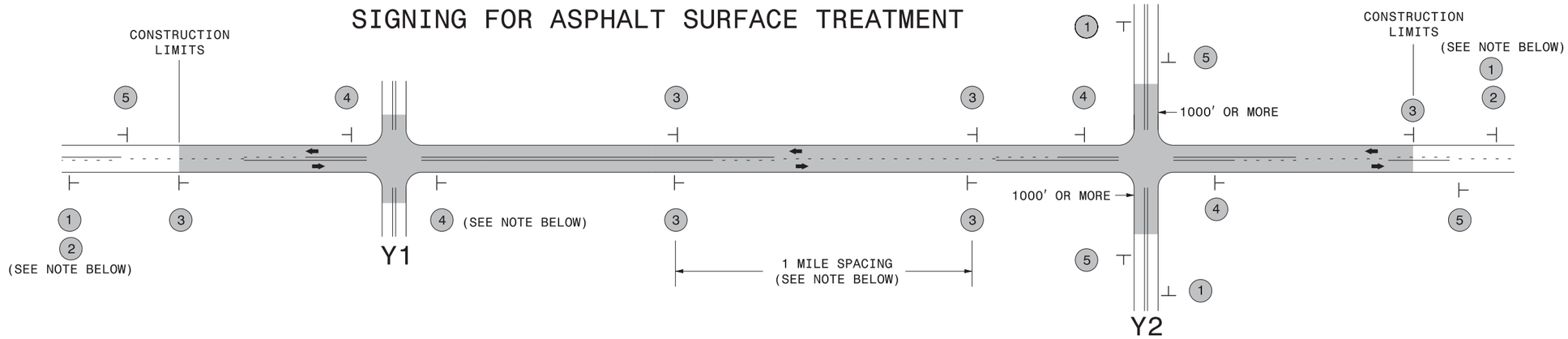

LEGEND

- ⊢ STATIONARY SIGN
- ⬅ DIRECTION OF TRAFFIC FLOW

SIGNING NOTES AND PLACEMENT PER DIRECTION

MAINLINE (-L-) SIGNING

1 — ROAD WORK AHEAD, W20-1, 48″ X 48″

PLACE 1000′ PRIOR TO BEGINNING OF CONSTRUCTION LIMITS.
ONLY USED ON -Y- LINES IF RESURFACING LIMITS EXTEND 1000′ ALONG -Y- LINE.

2 — NEXT XX MILES, W7-3aP, 24″ X 18″

#2 SIGN ONLY USED WHEN RESURFACING LIMITS ARE 2 OR MORE MILES IN LENGTH. ROUND UP TO NEXT WHOLE NUMBER.(NO FRACTIONAL OR DECIMAL NUMBERS)

3 — LOOSE GRAVEL, W8-7, 48″ X 48″ / UNMARKED PAVEMENT, SP, 48″ X 48″

ALTERNATE THE FOLLOWING TWO SIGNS:

STARTING WITH "LOOSE GRAVEL" (W8-7) FOLLOWED BY "UNMARKED PAVEMENT".

PLACE INITIALLY AT THE CONSTRUCTION LIMITS AND SPACED 1 MILE APART THEREAFTER. IF NO -Y- LINES EXIST, PLACE 2ND SET ½ MILE FROM THE CONSTRUCTION LIMITS AND THEN SPACE 1 MILE THEREAFTER.

4 — ROAD UNDER CONST, SP 13106, 48″ X 48″

THESE ARE FOR -Y- LINES THAT ARE "THROUGH" ROADWAYS. DEAD END AND SUBDIVISION ROADS ARE NOT "THROUGH" ROADWAYS. INSTALL 500′ +/- FROM EACH -Y- LINE APPROACH AS SHOWN ABOVE. FOR MULTIPLE -Y- LINES THAT ARE SEPARATED BY 0.25 MILES OR LESS, TREAT AS A SINGLE UNIT AND INSTALL WITHIN 500′ OF EACH APPROACH. A MAXIMUM OF 2 SIGN SETS PER MILE. DO NOT INSTALL WHEN -Y- LINES ARE WITHIN 0.5 MILES FROM "END ROAD WORK" SIGN.

5 — END ROAD WORK, G20-2 A, 48″ X 24″

PLACE 500′ FOLLOWING THE END OF CONSTRUCTION LIMITS.

-Y- LINE SIGNING

NO REQUIRED STATIONARY SIGNING FOR THE FOLLOWING -Y- LINE CONDITIONS:

1) LESS THAN 1000′ OF RESURFACING ALONG -Y- LINE
2) SUBDIVISION ROADS
3) DEAD END ROADS

WHEN PAVING/CONSTRUCTION ACTIVITIES PROCEED ACROSS AN UNSIGNED -Y- LINE, ADVANCE WARNING PORTABLE SIGNS SHALL BE USED ALONG THE -Y- LINE AS SHOWN BELOW. REMOVE UPON COMPLETION OF WORK.

ROAD WORK AHEAD, W20-1, 48″ X 48″ — PLACED 500′ IN ADVANCE OF FLAGGER.

W20-7 A, 48″ X 48″ — PLACED 250′ IN ADVANCE OF FLAGGER.

DIVISION OF HIGHWAYS · STATE OF NORTH CAROLINA · DEPARTMENT OF TRANSPORTATION · WORK ZONE TRAFFIC CONTROL

ADVANCE WARNING SIGNS
FOR
ASPHALT SURFACE TREATMENTS
2 LANE ROADWAYS

12/22/2014
S:\TMU\WZTC\Apps\WorkZoneGeneral\ExternalWebPage\DesRes\Documents\Resurfacing\Resurfacing_AdvWarn_2Ln - AST.dgn
User:rmgarrett