STATE	PROJECT NO.	SHEET NO.	TOTAL SHEETS
N.C.	10CR.10131.38, etc.	9	
F.A. PROJECT NO.			

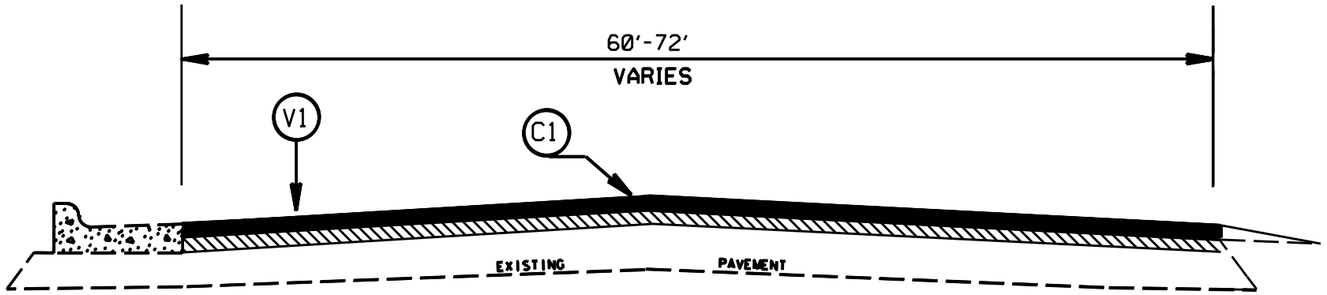

TYPICAL SECTION NO. 18

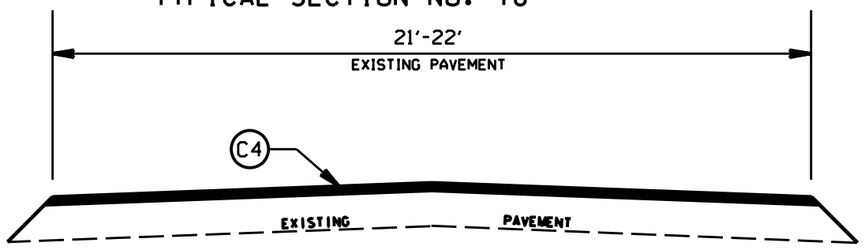

TYPICAL SECTION NO. 17

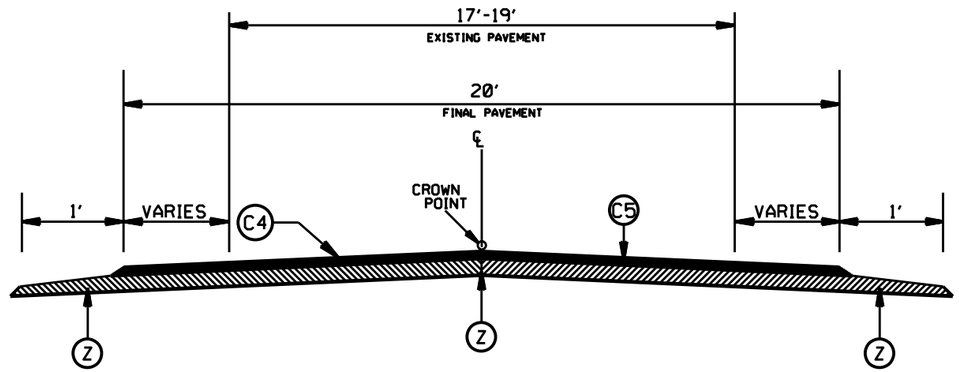

TYPICAL SECTION NO. 16

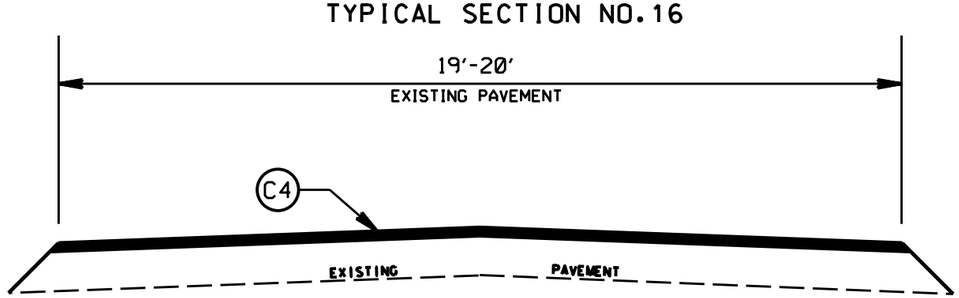

TYPICAL SECTION NO. 15

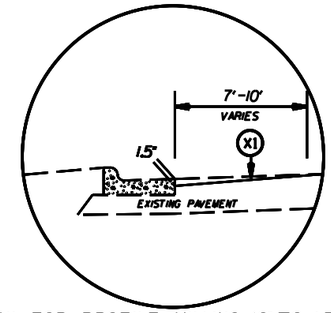

DETAIL FOR PROFILE MILLING (0" TO 1.5")

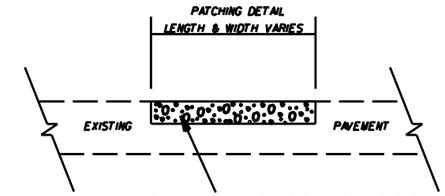

RATE IS VARIABLE AND SHALL BE AS DIRECTED BY THE ENGINEER
ASPHALT TYPE B25.0C OR I19.0C SHALL BE PLACED WHEN USING S9.5C SURFACE MIX
ASPHALT TYPE B25.0B OR I19.0B SHALL BE PLACED WHEN USING S9.5B SURFACE MIX

PAVEMENT SCHEDULE	
C1	PROP. APPROX. 1.5" ASPHALT CONCRETE SURFACE COURSE, TYPE S9.5C, AT AN AVERAGE RATE OF 168 LBS. PER SQ. YD.
C2	PROP. APPROX. 1.5" ASPHALT CONCRETE SURFACE COURSE, TYPE S9.5B, AT AN AVERAGE RATE OF 168 LBS. PER SQ. YD.
C3	PROP. APPROX. 3.0" ASPHALT CONCRETE SURFACE COURSE,TYPE S9.5B, AT AN AVERAGE RATE OF 168 LBS. PER SQ. YD. IN EACH OF TWO LAYERS
C4	PROP. APPROX. 1.0" ASPHALT CONCRETE SURFACE COURSE, TYPE SF9.5A, AT AN AVERAGE RATE OF 110 LBS. PER SQ. YD.
C5	PROP. ASPHALT SURFACE TREATMENT TO BE PLACED AT THE END OF EACH DAY'S PRODUCTION
C6	PROP. APPROX. 2.0" ASPHALT CONCRETE SURFACE COURSE, TYPE S9.5C AT AN AVERAGE RATE OF 224 LBS. PER SQ. YD.
D1	PROP. APPROX. 2.5" ASPHALT CONCRETE INTERMEDIAATE COURSE, TYPE I19.0B, AT AN AVERAGE RATE OF 285 LBS. PER SQ. YD.
D2	PROP. APPROX. 3.0"ASPHALT CONCRETE INTERMEDIAATE COURSE, TYPE I19.0C AT AN AVERAGE RATE OF 342 LBS PER SQ.YD.
T1	SHOULDER RECONSTRUCTION
V1	MILLING BITUMINOUS PAVEMENT 1.5"DEPTH. AS DIRECTED BY THE ENGINEER
V2	MILLING BITUMINOUS PAVEMENT 4.0"DEPTH.
X1	PROFILE MILLING BITUMINOUS PAVEMENT. 0" TO 1.5"DEPTH. AS DIRECTED BY THE ENGINEER
Z	FULL DEPTH RECLAMATIOM

CABARRUS COUNTY
RESURFACING 2015-2016

		REVISIONS	
SCALE	-NA-		
DATE	2/15		
DWG. BY	JDA		
DESIGN BY	JDA		
APPROVED	MPW		