8/17/99

PROJ. REFERENCE NO.	SHEET NO.
I-0914BB	PMP-3

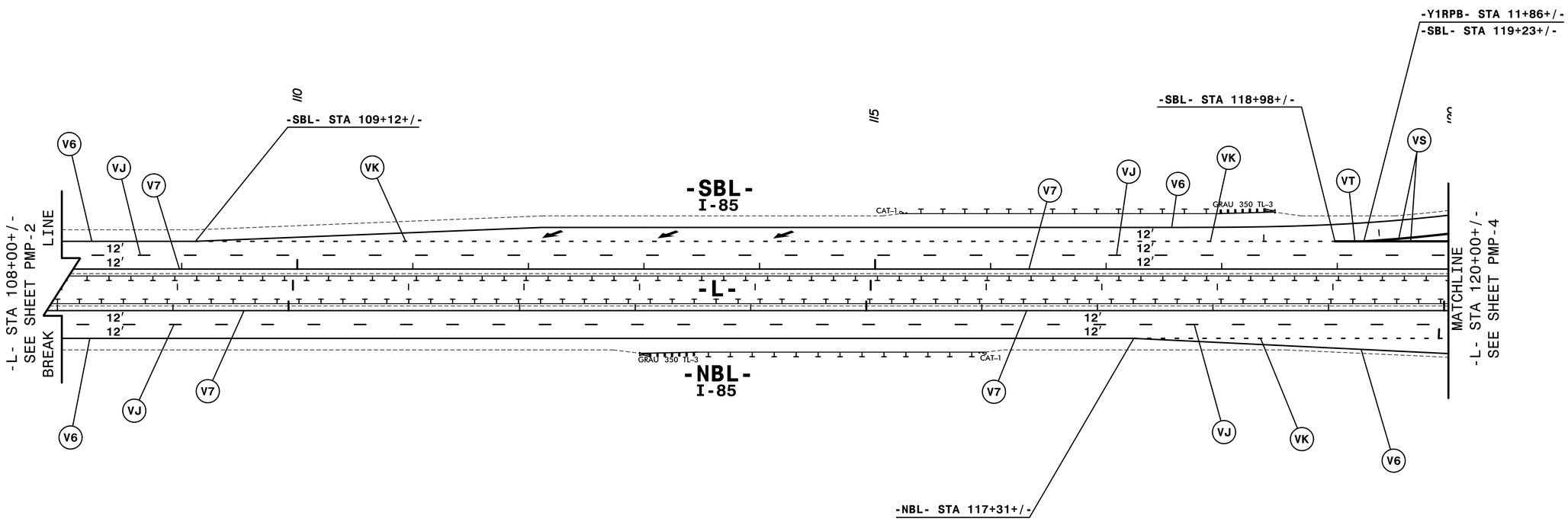

APPROVED: DocuSigned by: Rhonda B. Early F34CAE6A0BF48A DATE: 11/4/2024

SEAL

NORTH CAROLINA PROFESSIONAL SEAL 023521 ENGINEER RHONDA B. EARLY

HNTB

HNTB NORTH CAROLINA, P.C.
343 E. Six Forks Road, Suite 200
Raleigh, North Carolina 27609
NC License No: C-1554

SIGNING & DELINEATION

FINAL PAVEMENT MARKING PLANS

4:40:48 PM
:\PM\Plans\I0914BB_pmp03.dgn
$$$$USERNAME$$$$