PROJ. REFERENCE NO.	SHEET NO.
I-0914BB	TMP-102

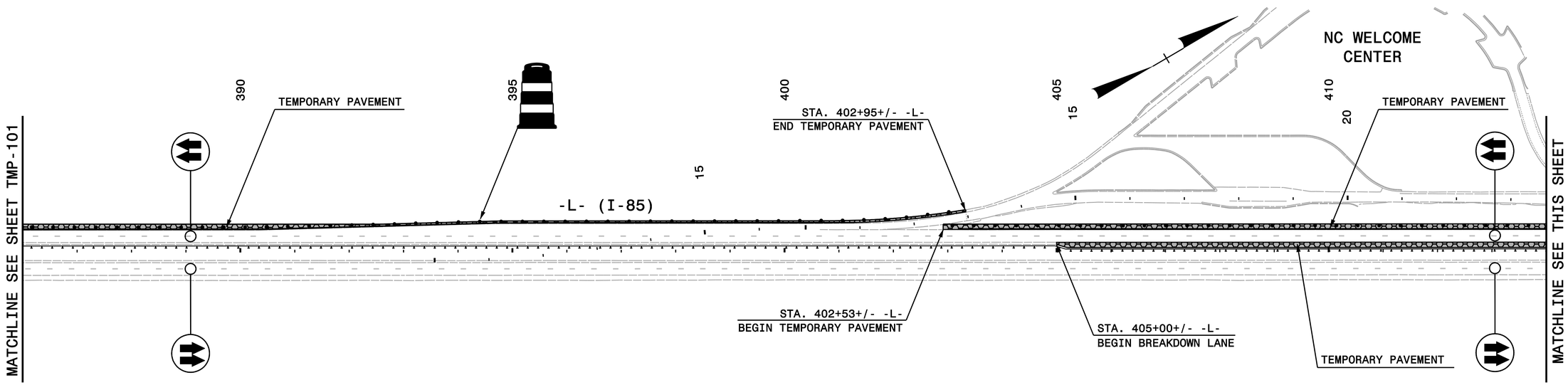

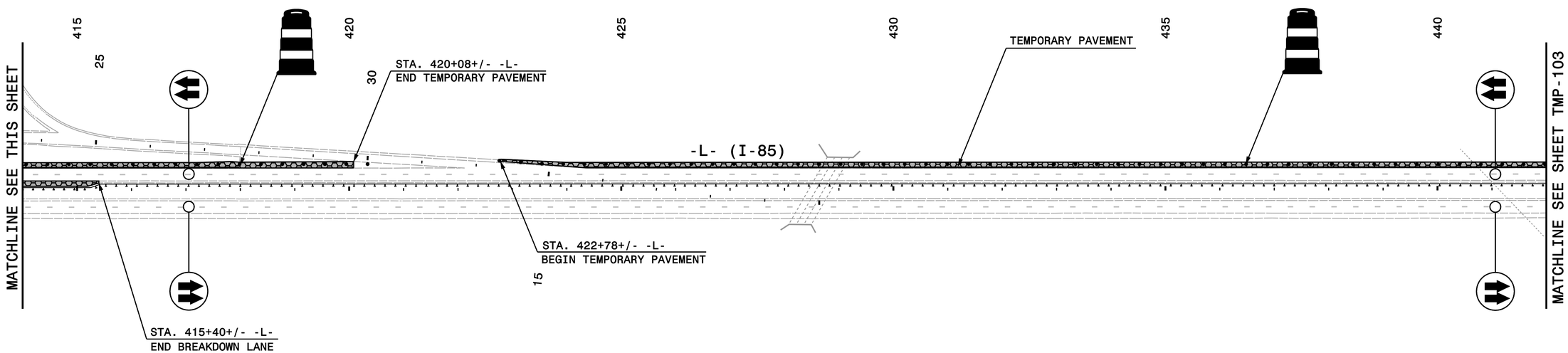

PLAN PREPARED IN THE OFFICE OF:

PROGRESSIVE DESIGN GROUP, INC.

ENGINEERS • CONSULTANTS

APPROVED: DocuSigned by: Tim Arey DATE: 11/4/2014

SEAL

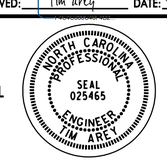

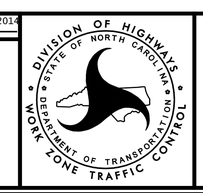

TRANSPORTATION MANAGEMENT PLAN
PHASE IV OVERVIEWS