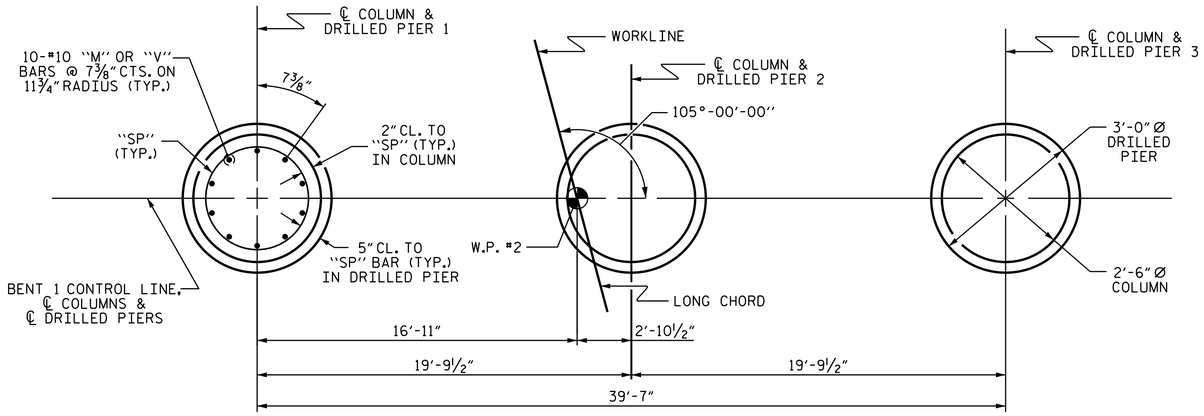

PLAN OF DRILLED PIERS & COLUMNS

(REINFORCING STEEL IS TYPICAL FOR EACH COLUMN & DRILLED PIER)

BAR TYPES

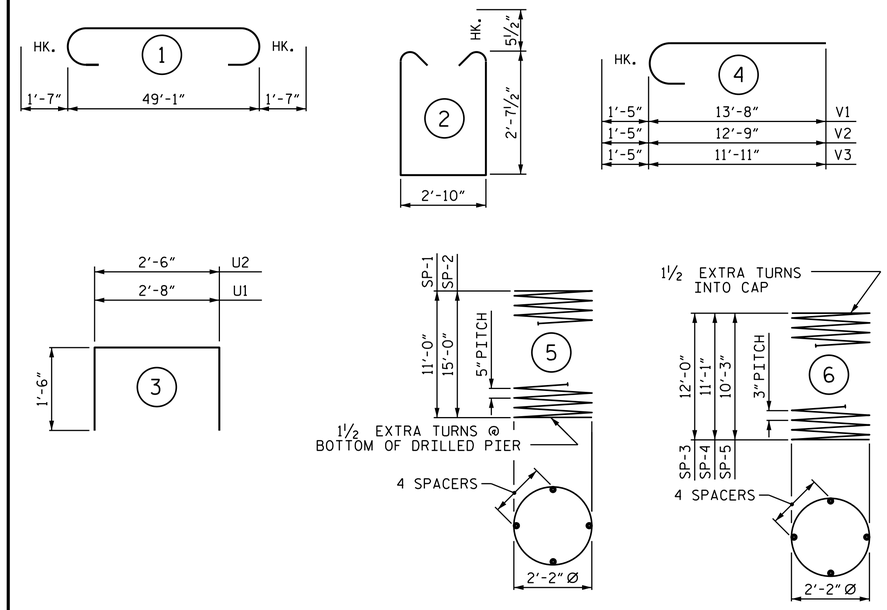

ALL BAR DIMENSIONS ARE OUT TO OUT

BILL OF MATERIAL FOR BENT 1

BAR	NO.	SIZE	TYPE	LENGTH	WEIGHT
B1	12	#11	1	52'-3"	3331
B2	6	#5	STR	49'-3"	308
D1	60	#6	STR	1'-6"	135
M1	10	#10	STR	20'-7"	886
M2	20	#10	STR	24'-7"	2116
S1	88	#5	2	9'-0"	826
U1	6	#4	3	5'-8"	23
U2	6	#4	3	5'-6"	22
V1	10	#10	4	15'-1"	649
V2	10	#10	4	14'-2"	610
V3	10	#10	4	13'-4"	574
REINFORCING STEEL					9480 LBS.
SP-1	1	*	5	186'-5"	194
SP-2	2	*	5	253'-0"	528
SP-3	1	**	6	334'-1"	223
SP-4	1	**	6	307'-4"	205
SP-5	1	**	6	287'-4"	192
SPIRAL COLUMN REINFORCING STEEL					1342 LBS.

* THE SP-1 & SP-2 SPIRAL REINFORCING STEEL SHALL BE W31 OR D-31 COLD DRAWN WIRE OR #5 PLAIN OR DEFORMED BAR

** THE SP-3, SP-4 & SP-5 SPIRAL REINFORCING STEEL SHALL BE W20 OR D-20 COLD DRAWN WIRE OR #4 PLAIN OR DEFORMED BAR

CLASS A CONCRETE BREAKDOWN

POUR #2 (COLUMNS)	5.9 C.Y.
POUR #3 (CAP)	17.4 C.Y.
TOTAL CLASS A CONCRETE	23.3 C.Y.

DRILLED PIERS:

DRILLED PIER CONCRETE POUR #1 (DRILLED PIERS)	11.1 C.Y.
3'-0" Ø DRILLED PIER NOT IN SOIL	21.0 LIN. FT.
3'-0" Ø DRILLED PIER IN SOIL	21.5 LIN. FT.
PERMANENT STEEL CASING FOR 3'-0" Ø DRILLED PIER	24.5 LIN. FT.
CSL TUBES	188.0 LIN. FT.

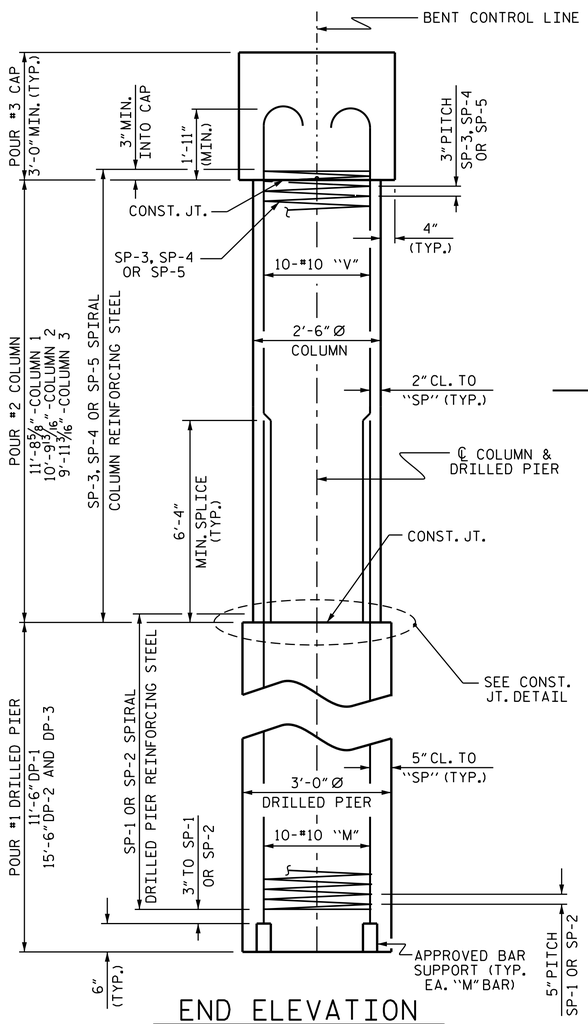

END ELEVATION

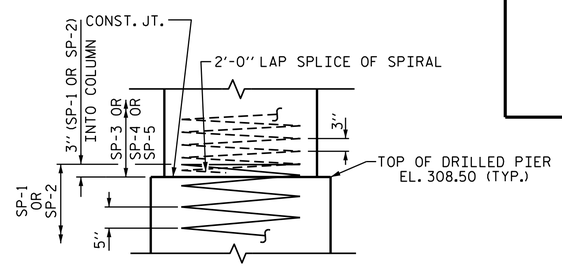

CONSTRUCTION JOINT DETAIL

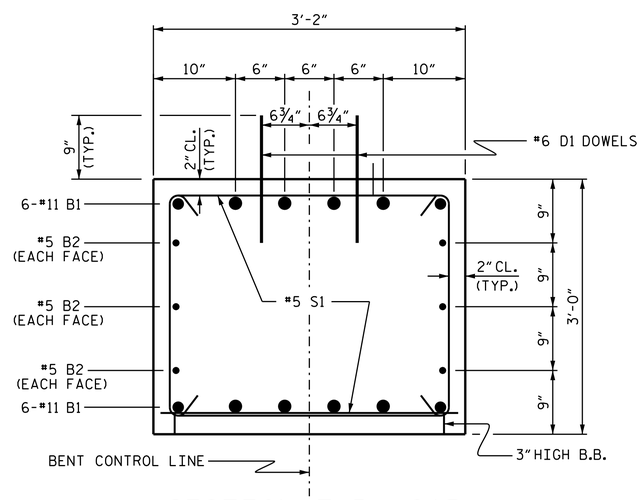

SECTION THRU CAP

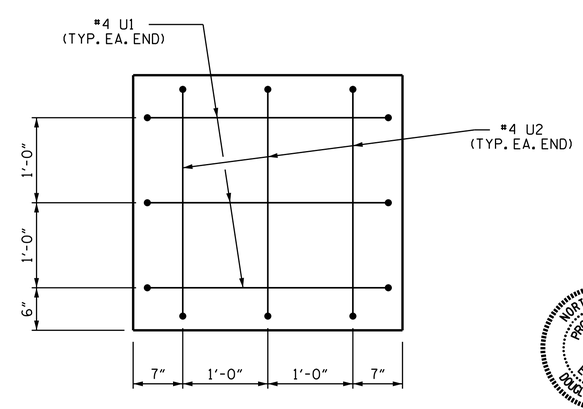

END OF CAP VIEW

(TYPICAL BOTH ENDS)

NORTH CAROLINA PROFESSIONAL SEAL 14855 ENGINEER DOUGLAS R. CALHOUN

DocuSigned by: Douglas R. Calhoun 430196F9D5E0429... 1/20/2015

PROJECT NO. B-4659

WAKE COUNTY

STATION: 16+15.00 -L-

SHEET 2 OF 2

STATE OF NORTH CAROLINA
DEPARTMENT OF TRANSPORTATION
RALEIGH

SUBSTRUCTURE

BENT 1

REVISIONS						SHEET NO.
NO.	BY:	DATE:	NO.	BY:	DATE:	S-27
1			3			TOTAL SHEETS
2			4			32

DRAWN BY : A. K. PATEL DATE : 2/14
CHECKED BY : A. SORSENGINH DATE : 3/14
DESIGN ENGINEER OF RECORD: A. K. PATEL DATE : 4/14

20-JAN-2015 15:47
E:\TIPProjects-B\B4659\Structures\Plans\SUBSTRUCTURE\B-4659_SD_B*.dgn
pknewton