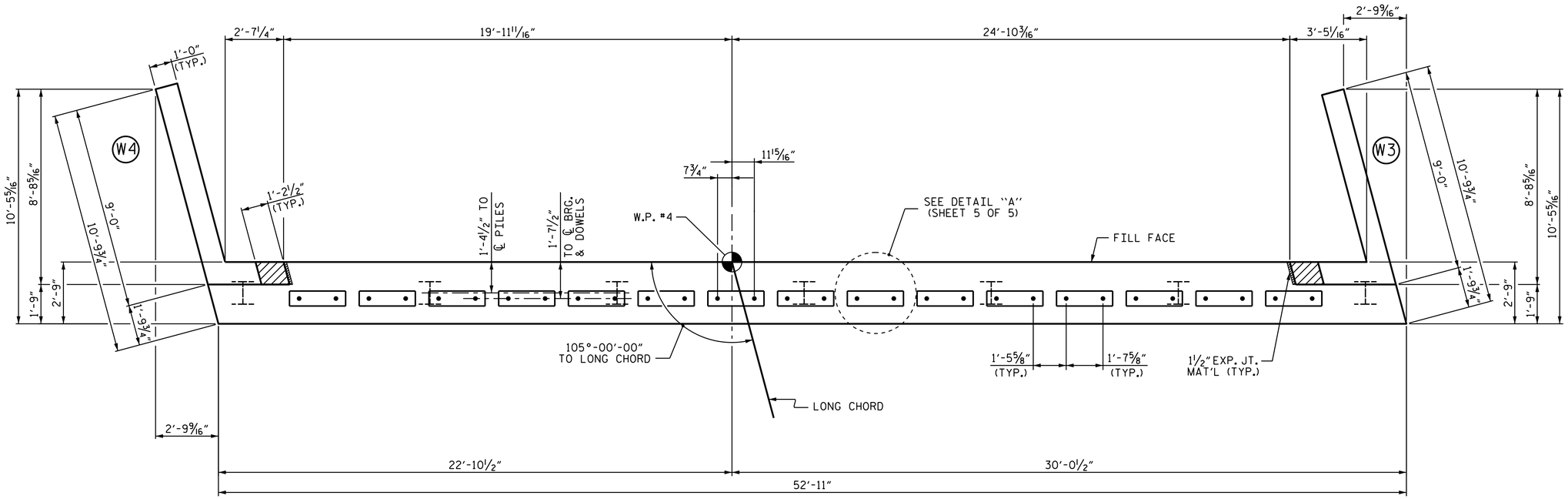

PLAN

NOTES

STIRRUPS IN CAP MAY BE SHIFTED AS NECESSARY TO CLEAR DOWELS.

THE CONCRETE IN THE SHADED AREA OF THE WING SHALL BE POURED AFTER THE PARAPET AND END POSTS ARE CAST IF SLIP FORMING IS USED.

FOR PILE SPLICE DETAILS, SEE SHEET 5 OF 5.

FOR WING DETAILS, SEE SHEET 4 OF 5.

TOP OF PILE ELEVATIONS	
1	324.56
2	324.19
3	323.81
4	323.44
5	323.06
6	322.69
7	322.31

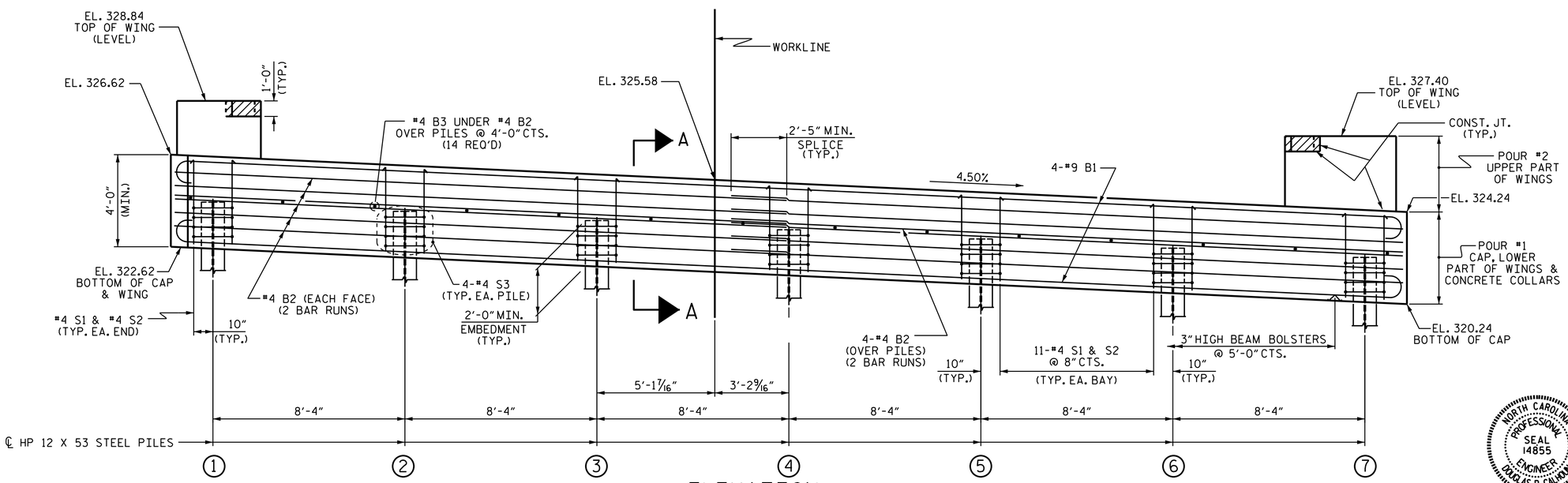

ELEVATION

WINGS NOT SHOWN FOR CLARITY.
FOR SECTION A-A, SEE SHEET 5 OF 5.
CONCRETE COLLARS FOR STEEL PILES NOT SHOWN IN PLAN AND ELEVATION VIEWS FOR CLARITY.
SEE "CORROSION PROTECTION FOR STEEL PILES DETAIL", SHEET 5 OF 5.

PROJECT NO. B-4659
WAKE COUNTY
STATION: 16+15.00 -L-

SHEET 2 OF 5

STATE OF NORTH CAROLINA
DEPARTMENT OF TRANSPORTATION
RALEIGH

SUBSTRUCTURE
END BENT 2

NORTH CAROLINA PROFESSIONAL SEAL 14855 ENGINEER DOUGLAS R. CALHOUN

DocuSigned by: Douglas R. Calhoun
430196F9D5ED429...
1/20/2015

REVISIONS						SHEET NO.
NO.	BY:	DATE:	NO.	BY:	DATE:	S-22
1			3			TOTAL SHEETS
2			4			32

DRAWN BY : A. K. PATEL DATE : 10/2013
CHECKED BY : A. SORSENGINH DATE : 1/2014
DESIGN ENGINEER OF RECORD: A. K. PATEL DATE : 2/2014

20-JAN-2015 15:46
E:\TIPProjects-B\B4659\Structures\Plans\SUBSTRUCTURE\B-4659_SD_E*_01.dgn
pknewton

NCBDS