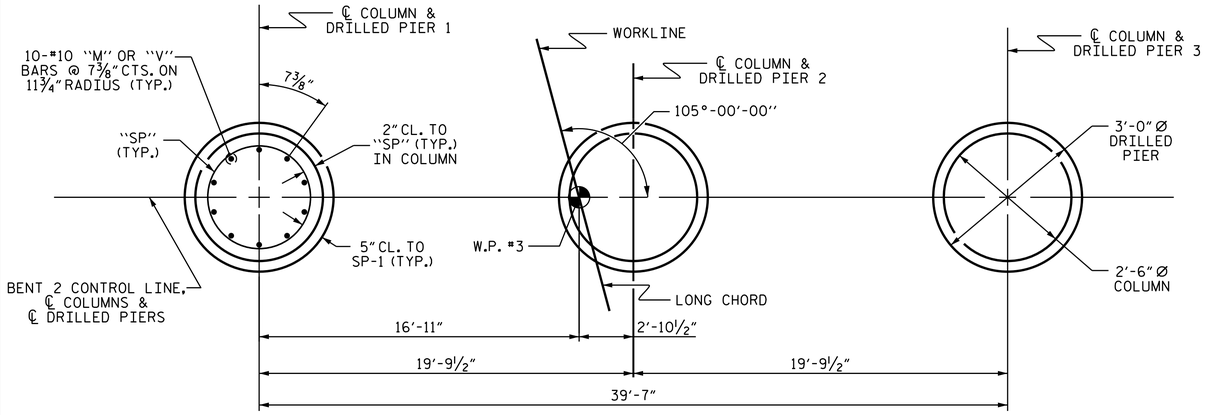

PLAN OF DRILLED PIERS & COLUMNS

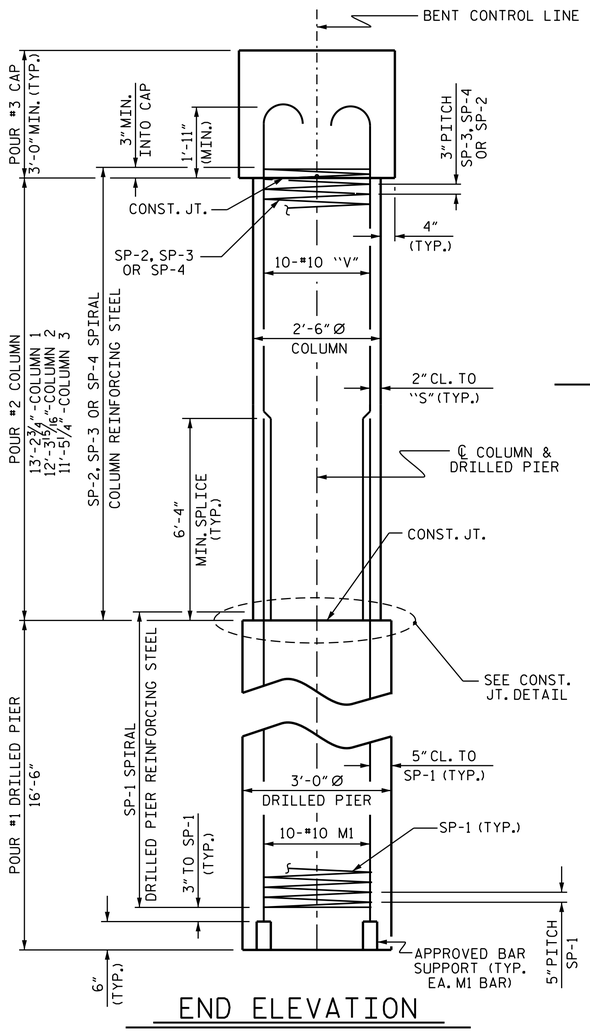

END ELEVATION

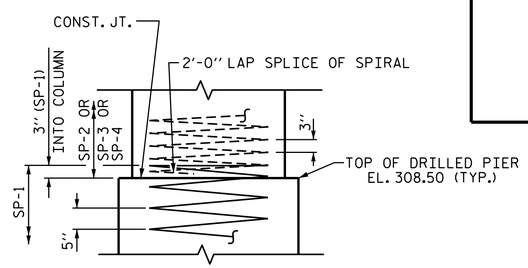

CONSTRUCTION JOINT DETAIL

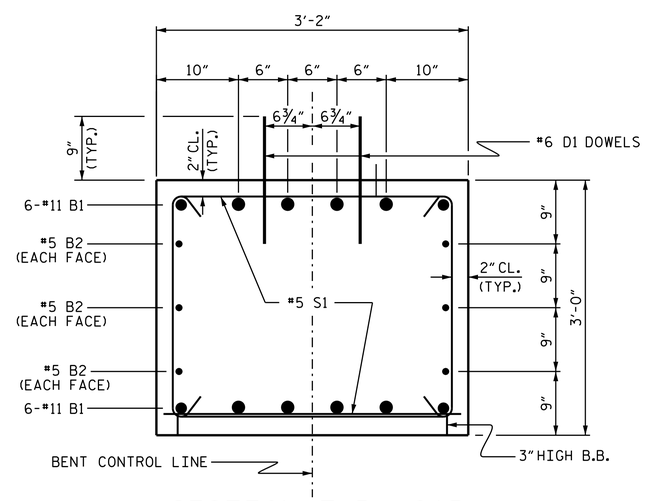

SECTION THRU CAP

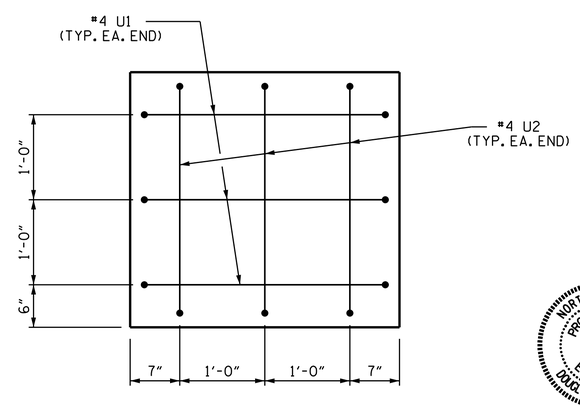

END OF CAP VIEW

(TYPICAL BOTH ENDS)

BAR TYPES

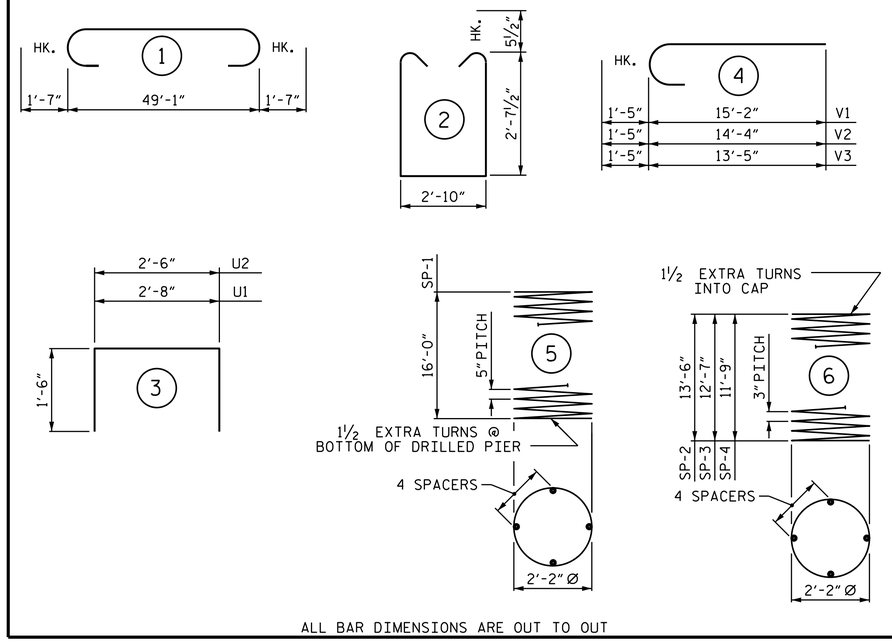

ALL BAR DIMENSIONS ARE OUT TO OUT

BILL OF MATERIAL FOR BENT 2

BAR	NO.	SIZE	TYPE	LENGTH	WEIGHT
B1	12	#11	1	52'-3"	3331
B2	6	#5	STR	49'-3"	308
D1	60	#6	STR	1'-6"	135
M1	30	#10	STR	25'-7"	3303
S1	88	#5	2	9'-0"	826
U1	6	#4	3	5'-8"	23
U2	6	#4	3	5'-6"	22
V1	10	#10	4	16'-7"	714
V2	10	#10	4	15'-9"	678
V3	10	#10	4	14'-10"	638
REINFORCING STEEL					9,978 LBS.
SP-1	3	*	5	266'-3"	834
SP-2	1	**	6	374'-2"	250
SP-3	1	**	6	347'-5"	232
SP-4	1	**	6	327'-5"	219
SPIRAL COLUMN REINFORCING STEEL					1,535 LBS.

* THE SP-1 SPIRAL REINFORCING STEEL SHALL BE W31 OR D-31 COLD DRAWN WIRE OR #5 PLAIN OR DEFORMED BAR

** THE SP-2, SP-3 & SP-4 SPIRAL REINFORCING STEEL SHALL BE W20 OR D-20 COLD DRAWN WIRE OR #4 PLAIN OR DEFORMED BAR

CLASS A CONCRETE BREAKDOWN

POUR #2 (COLUMNS)	6.7 C.Y.
POUR #3 (CAP)	17.4 C.Y.
TOTAL CLASS A CONCRETE	24.1 C.Y.

DRILLED PIERS:

DRILLED PIER CONCRETE POUR #1 (DRILLED PIERS)	13.0 C.Y.
3'-0" Ø DRILLED PIER NOT IN SOIL	21.0 LIN. FT.
3'-0" Ø DRILLED PIER IN SOIL	28.5 LIN. FT.
PERMANENT STEEL CASING FOR 3'-0" Ø DRILLED PIER	28.5 LIN. FT.
CSL TUBES	216.0 LIN. FT.

PROJECT NO. B-4659

WAKE COUNTY

STATION: 16+15.00 -L-

SHEET 2 OF 2

STATE OF NORTH CAROLINA
DEPARTMENT OF TRANSPORTATION
RALEIGH

SUBSTRUCTURE

BENT 2

NORTH CAROLINA PROFESSIONAL SEAL 14855 ENGINEER DOUGLAS R. CALHOUN

DocuSigned by: Douglas R. Calhoun
430196F9D5E0429...
1/20/2015

REVISIONS							
NO.	BY:	DATE:	NO.	BY:	DATE:	SHEET NO.	S-29
1			3			TOTAL SHEETS	32
2			4				

DRAWN BY :	A. K. PATEL	DATE :	2/14
CHECKED BY :	A. SORSENGINH	DATE :	3/14
DESIGN ENGINEER OF RECORD:	A. K. PATEL	DATE :	4/14

20-JAN-2015 15:47
E:\TIPProjects-B\B4659\Structures\Plans\SUBSTRUCTURE\B-4659_SD_B*.dgn
pknewton