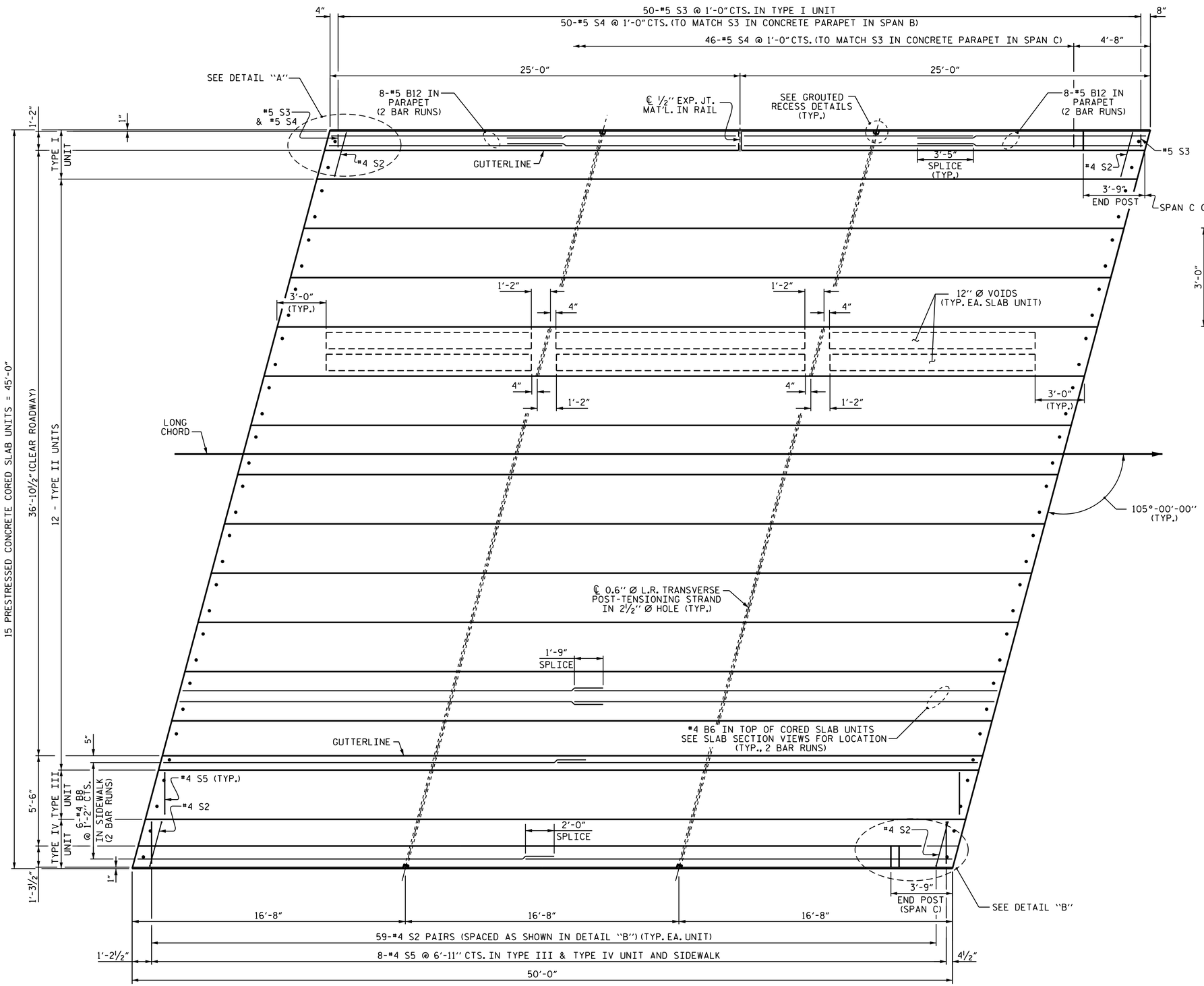

PLAN OF UNIT

(SPAN B SHOWN, SPAN C SIMILAR EXCEPT AS NOTED)
FOR SIDEWALK DETAILS, SEE "SIDEWALK DETAILS" SHEET.

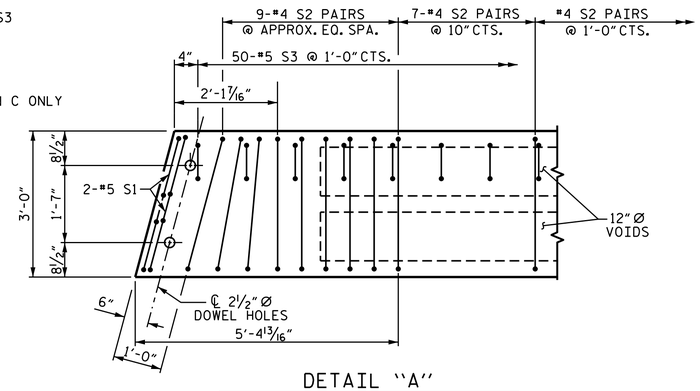

DETAIL "A"

(SIMILAR EACH END OF UNIT)
NOTE: TYPE I UNIT SHOWN - TYPE II UNIT SIMILAR EXCEPT OMIT #5 S3 BARS.

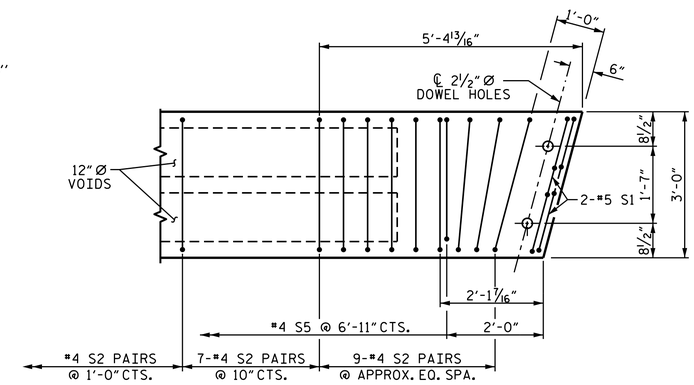

DETAIL "B"

(SIMILAR EACH END OF UNIT)
NOTE: TYPE III AND IV UNITS SHOWN

PROJECT NO. B-4659
WAKE COUNTY
STATION: 16+15.00 -L-

SHEET 3 OF 7

STATE OF NORTH CAROLINA
DEPARTMENT OF TRANSPORTATION
RALEIGH

PLAN OF 50' UNIT 36'-10 1/2" CLEAR ROADWAY 105° SKEW (SPANS B AND C)

NORTH CAROLINA PROFESSIONAL SEAL 14855 ENGINEER DOUGLAS R. CALHOUN
DocuSigned by: Douglas R. Calhoun
430196F0D5E0429...
1/20/2015

REVISIONS						
NO.	BY:	DATE:	NO.	BY:	DATE:	
1			3			
2			4			

SHEET NO. S-9
TOTAL SHEETS 32

DRAWN BY : A. K. PATEL DATE : 09/13
CHECKED BY : A. SORSENGINH DATE : 12/13
DESIGN ENGINEER OF RECORD: A. K. PATEL DATE : 01/14

20-JAN-2015 15:46
E:\TIPProjects-B\B4659\Structures\Plans\SUPERSTRUCTURE\B-4659_SD_CS.dgn
pknewton