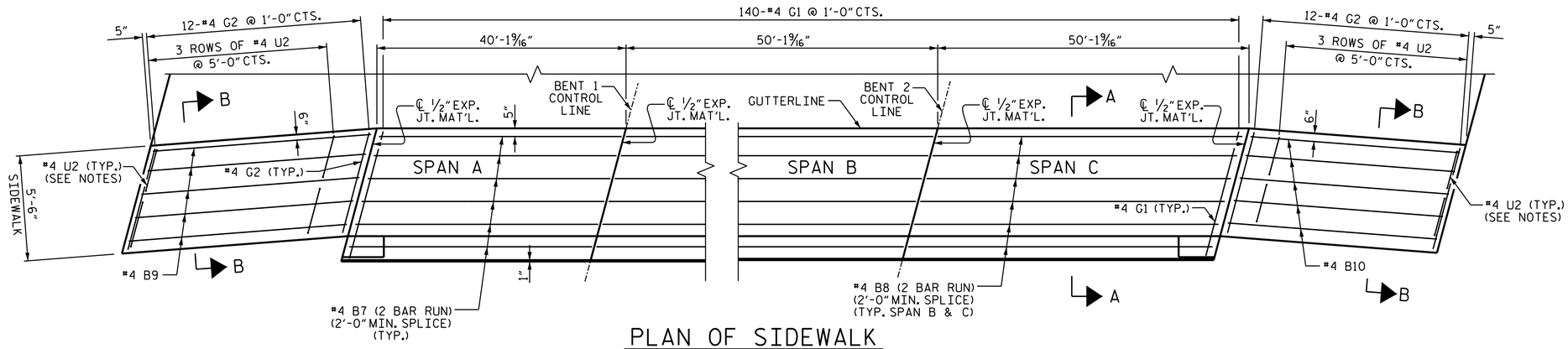

PLAN OF SIDEWALK

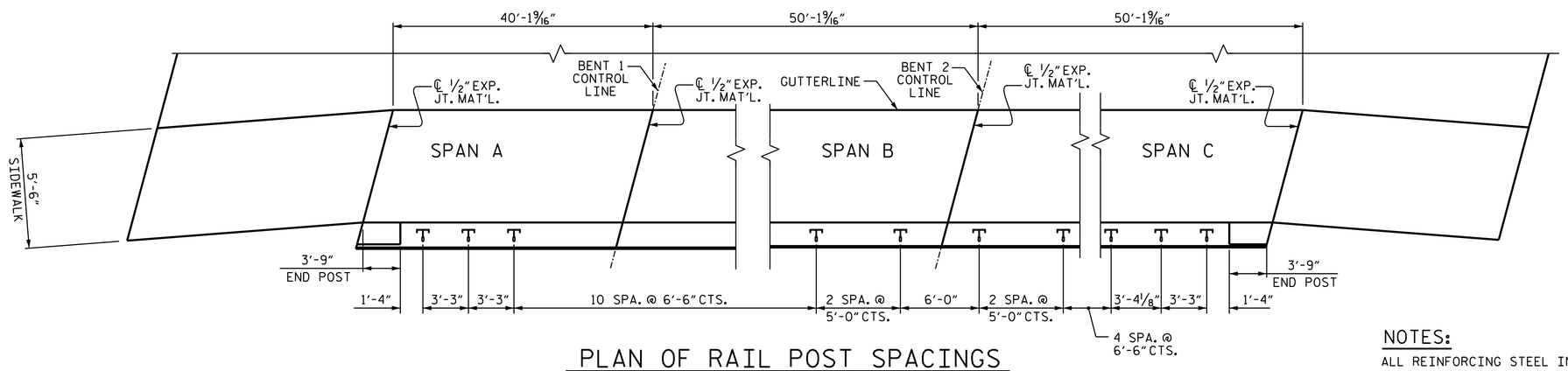

PLAN OF RAIL POST SPACINGS

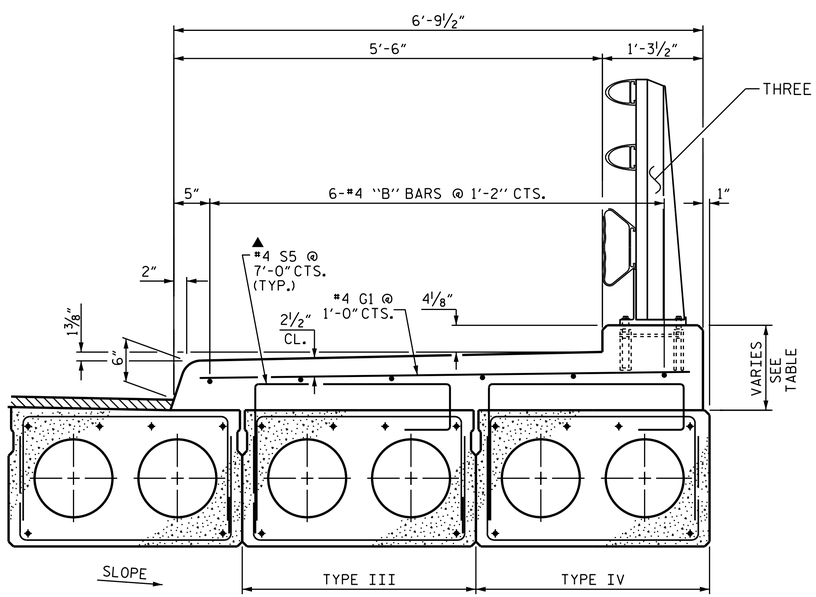

SECTION A-A

(SIDEWALK ON RIGHT SIDE OF DECK)

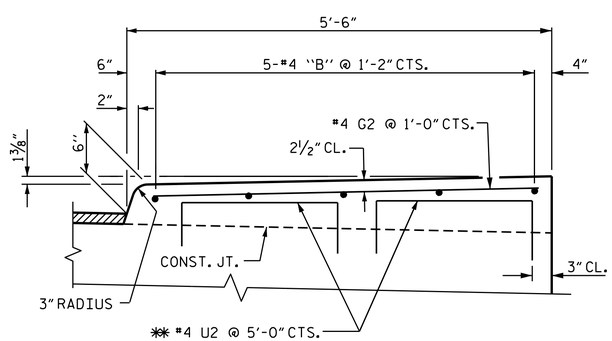

SECTION B-B

ON APPROACH SLABS

BILL OF MATERIAL

SIDEWALK

BAR	NO.	SIZE	TYPE	LENGTH	WEIGHT
* B7	12	#4	STR	20'-9"	166
* B8	24	#4	STR	25'-9"	413
* B9	5	#4	STR	11'-10"	40
* B10	5	#4	STR	11'-5"	38
* G1	140	#4	STR	6'-6"	608
* G2	24	#4	STR	5'-2"	83
* U2	12	#4	1	3'-0"	24

* EPOXY COATED REINF. STEEL 1,372 LBS

CLASS AA CONCRETE 37.4 C. Y.

BAR TYPE

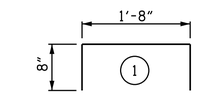

BAR DIMENSIONS ARE OUT TO OUT

NOTES:

ALL REINFORCING STEEL IN THE SIDEWALK SHALL BE EPOXY COATED.

GROOVED CONTRACTION JOINTS, 1/2" IN DEPTH, SHALL BE TOOLED IN ALL EXPOSED FACES OF THE SIDEWALK IN ACCORDANCE WITH ARTICLE 825-10(B) OF THE STANDARD SPECIFICATIONS, EXCEPT THAT THE CONTRACTION JOINTS SHALL BE ORIENTED ALONG THE SKEW. THE CONTRACTION JOINT SHALL BE LOCATED AT A SPACING OF 8 TO 10 FT. NO CONTRACTION JOINT WILL BE REQUIRED FOR SEGMENTS LESS THAN 10 FEET IN LENGTH.

PAYMENT FOR SIDEWALK SHALL BE INCLUDED IN THE PAY ITEMS FOR "CLASS AA CONCRETE" AND "EPOXY COATED REINFORCING STEEL."

** THE #4 U2 BARS MAY BE PUSHED INTO GREEN CONCRETE AFTER APPROACH SLAB HAS BEEN SCREEDED OFF.

▲ #4 S5 BARS INCLUDED IN BILL OF MATERIAL FOR CORED SLAB UNIT.

SIDEWALK HEIGHT TABLE

LOCATION	SIDEWALK HEIGHT
℄ BRG. @ END BENT 1	1'-5 1/2"
MID-SPAN OF SPAN A	1'-4 3/4"
℄ BRG. @ BENT 1	1'-5 1/2"
MID-SPAN OF SPAN B	1'-4 1/4"
℄ BRG. @ BENT 2	1'-5 1/2"
MID-SPAN OF SPAN C	1'-4 1/4"
℄ BRG. @ END BENT 2	1'-5 1/2"

SIDEWALK HEIGHT IS BASED ON PREDICTED FINAL CAMBER AND THEORETICAL GRADE LINE ELEVATIONS AND VARIES BETWEEN ℄ BEARING AND MID-SPAN FOR ALL SPANS.

NORTH CAROLINA PROFESSIONAL SEAL 14855 ENGINEER DOUGLAS R. CALHOUN

DOCUSIGNED BY: Douglas R. Calhoun 430196F9D5E0429... 1/20/2015

PROJECT NO. B-4659

WAKE COUNTY

STATION: 16+15.00 -L-

SHEET 7 OF 7

STATE OF NORTH CAROLINA
DEPARTMENT OF TRANSPORTATION
RALEIGH

SUPERSTRUCTURE

SIDEWALK DETAILS

REVISIONS								SHEET NO.
NO.	BY:	DATE:	NO.	BY:	DATE:			S-13
1			3					TOTAL SHEETS
2			4					32

DRAWN BY : A. K. PATEL DATE : 9-13
CHECKED BY : A. SORSENGINH DATE : 12-13
DESIGN ENGINEER OF RECORD: A. K. PATEL DATE : 1-14

20-JAN-2015 15:46
E:\TIPProjects-B\B4659\Structures\Plans\SUPERSTRUCTURE\B-4659_SD_CS.dgn
pknewton