NOTES

ALL REINFORCING STEEL IN END POSTS SHALL BE EPOXY COATED.

PAYMENT FOR THE END POSTS SHALL BE INCLUDED IN THE PAY ITEMS FOR "CLASS AA CONCRETE" AND "EPOXY COATED REINFORCING STEEL."

BILL OF MATERIAL FOR 2 END POSTS

BAR	NO.	SIZE	TYPE	LENGTH	WEIGHT
✳E1	4	#7	STR	3'-6"	29
✳E2	4	#7	STR	4'-1"	33
✳E3	4	#7	STR	4'-8"	38
✳E4	4	#7	STR	5'-2"	42
✳F1	2	#6	STR	2'-9"	8
✳F2	4	#6	STR	3'-5"	21
✳F3	2	#6	STR	3'-6"	11
✳F4	2	#6	STR	2'-11"	9
✳F5	4	#6	STR	3'-7"	22
✳F6	2	#6	STR	3'-9"	11

✳EPOXY COATED REINFORCING STEEL — LBS. 224

CLASS AA CONCRETE 2 END POSTS — CU.YDS. 0.9

BAR TYPES

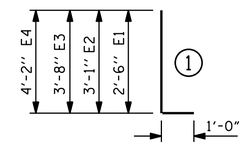

ALL BAR DIMENSIONS ARE OUT TO OUT

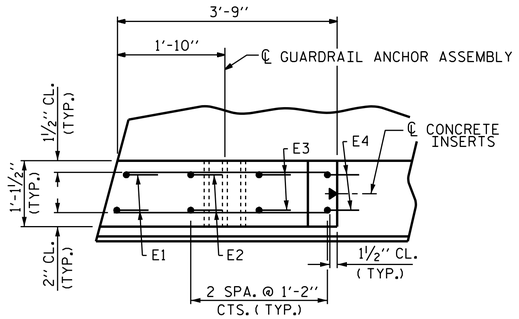

PLAN

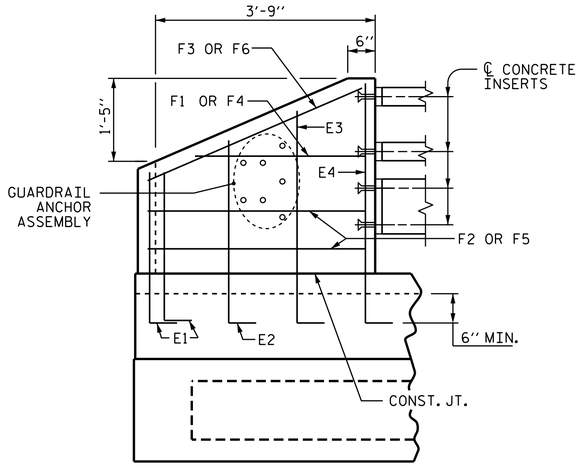

ELEVATION

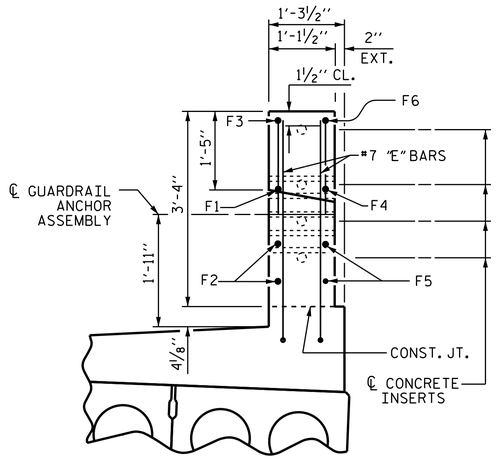

END VIEW

END POST DETAILS FOR THREE BAR METAL RAIL

PROJECT NO. B-4659

WAKE COUNTY

STATION: 16+15.00 -L-

SHEET 6 OF 7

STATE OF NORTH CAROLINA
DEPARTMENT OF TRANSPORTATION
RALEIGH

END POST FOR 3 BAR METAL RAIL DETAILS (RIGHT SIDE)

NORTH CAROLINA PROFESSIONAL SEAL 14855 ENGINEER DOUGLAS R. CALHOUN

DocuSigned by: Douglas R. Calhoun
430196F9D5E0429...
1/20/2015

REVISIONS						SHEET NO.
NO.	BY:	DATE:	NO.	BY:	DATE:	S-12
1			3			TOTAL SHEETS
2			4			32

DRAWN BY : AKP/ T.L. AVERETTE DATE : 12/13
CHECKED BY : D.R. CALHOUN DATE : 12/13
DESIGN ENGINEER OF RECORD: A.K. PATEL DATE : 01/14

20-JAN-2015 15:46
E:\TIPProjects-B\B4659\Structures\Plans\SUPERSTRUCTURE\B-4659_SD_CS.dgn
pknewton