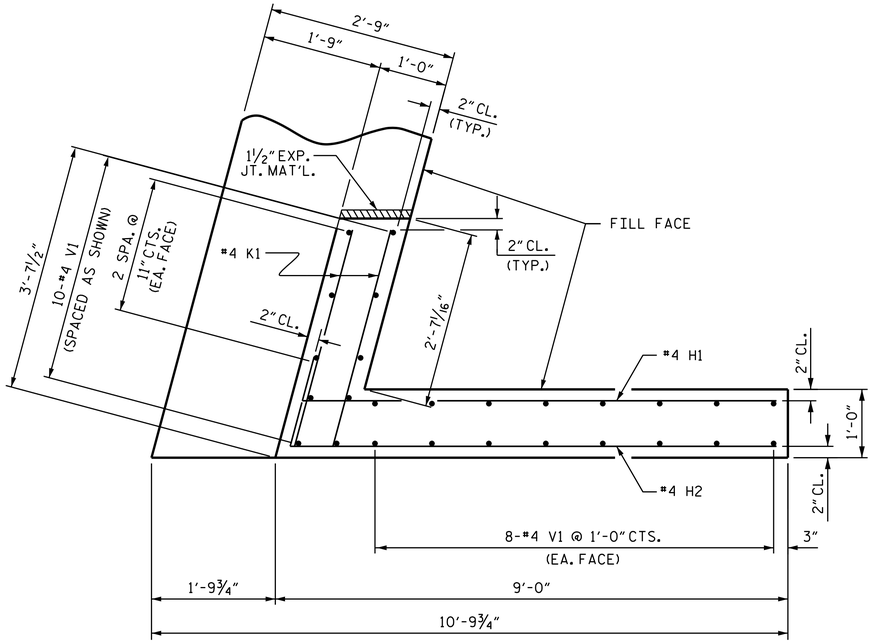

PLAN OF WING (W1)

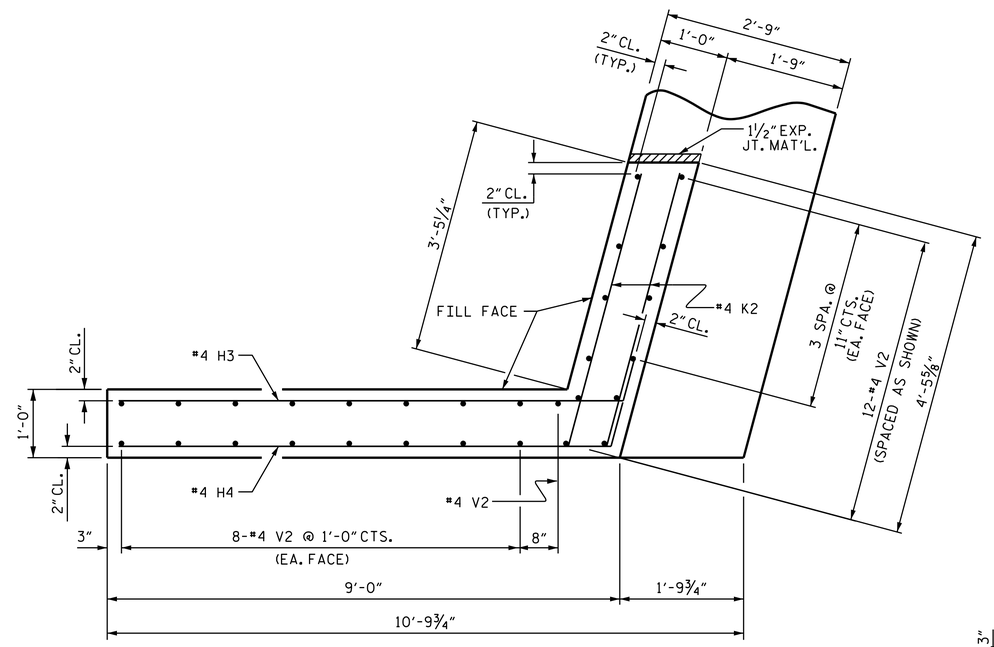

PLAN OF WING (W2)

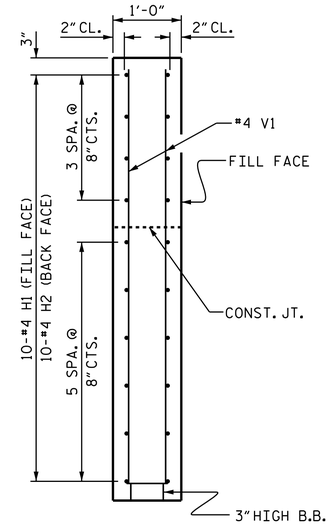

SECTION X-X

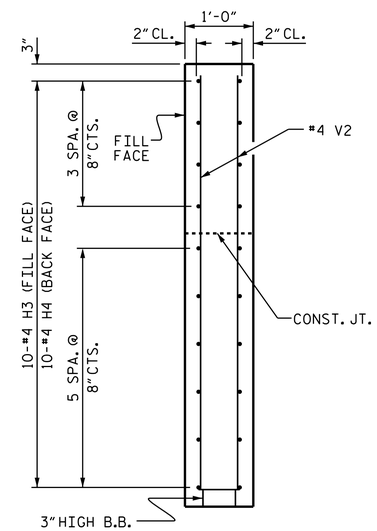

SECTION Y-Y

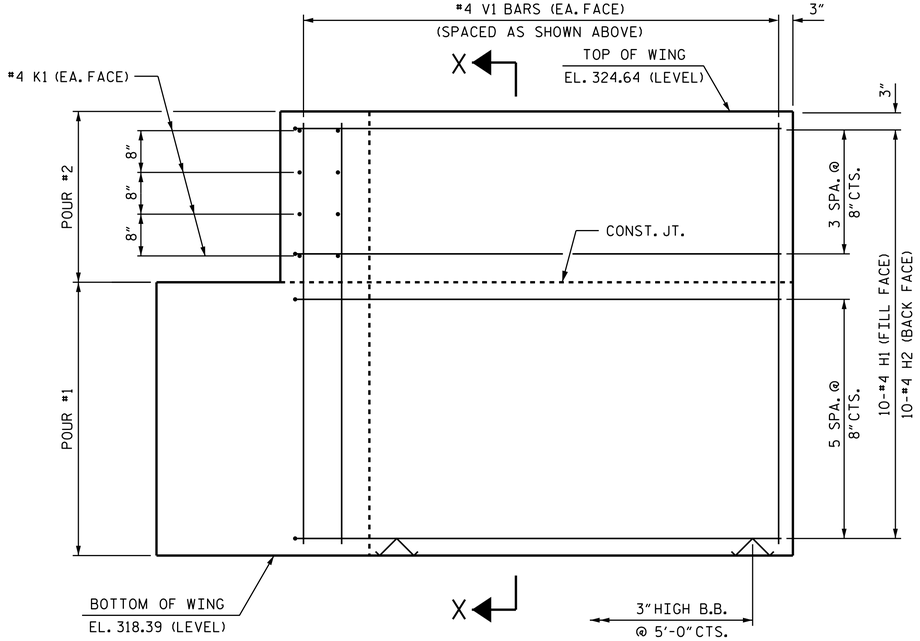

ELEVATION OF WING (W1)

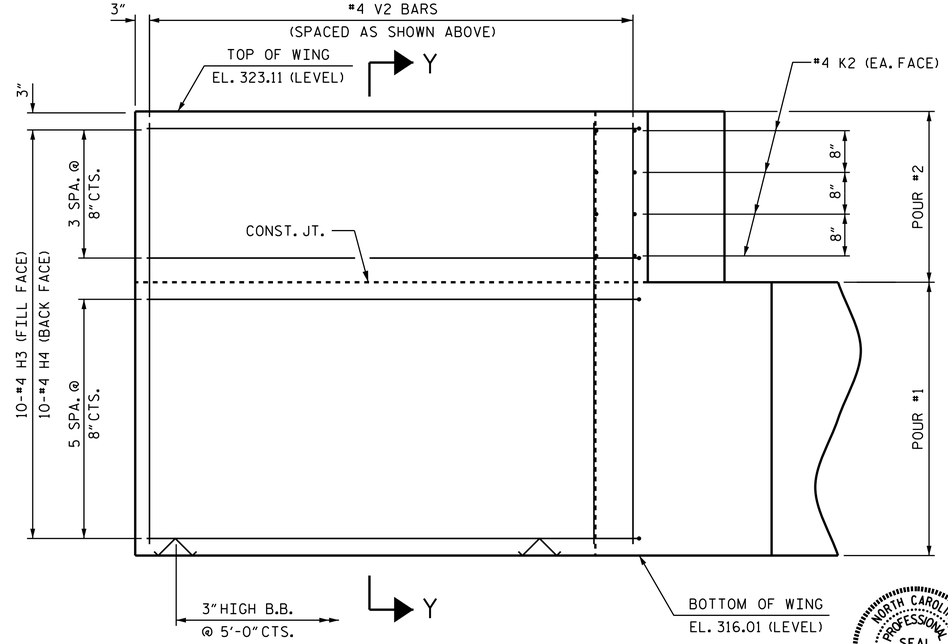

ELEVATION OF WING (W2)

WING DETAILS

NORTH CAROLINA PROFESSIONAL SEAL 14855 ENGINEER DOUGLAS R. CALHOUN

DocuSigned by: Douglas R. Calhoun 4301196F9D5E0429...
1/20/2015

PROJECT NO. B-4659
WAKE COUNTY
STATION: 16+15.00 -L-

SHEET 3 OF 5

STATE OF NORTH CAROLINA
DEPARTMENT OF TRANSPORTATION
RALEIGH

SUBSTRUCTURE
END BENT 1
WING DETAILS

REVISIONS						SHEET NO.
NO.	BY:	DATE:	NO.	BY:	DATE:	S-23
1			3			TOTAL SHEETS
2			4			32

DRAWN BY : A. K. PATEL DATE : 10/2013
CHECKED BY : A. SORSENGINH DATE : 1/2014
DESIGN ENGINEER OF RECORD: A. K. PATEL DATE : 2/2014

20-JAN-2015 15:46
E:\TIPProjects-B\B4659\Structures\Plans\SUBSTRUCTURE\B-4659_SD_E*_01.dgn
pknewton