ESTIMATED QUANTITIES		
BRIDGE @ STA. 16+15.00 -L-	RIP RAP CLASS II (2'-0" THICK)	GEOTEXTILE FOR DRAINAGE
	TONS	SQUARE YARDS
END BENT 1	255	285
END BENT 2	465	515

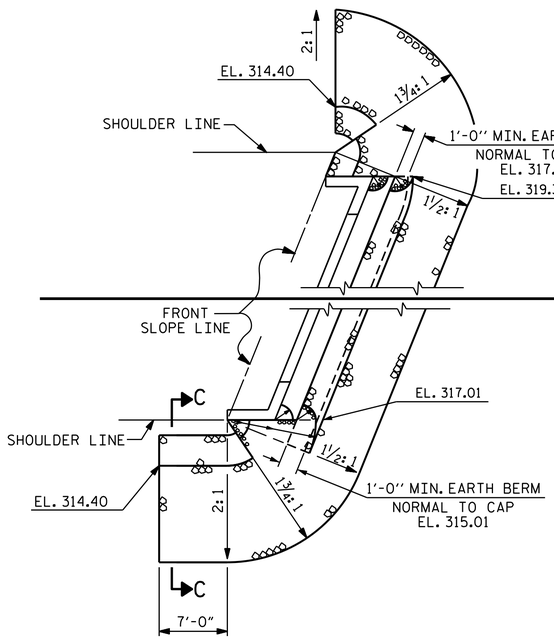

END BENT 1

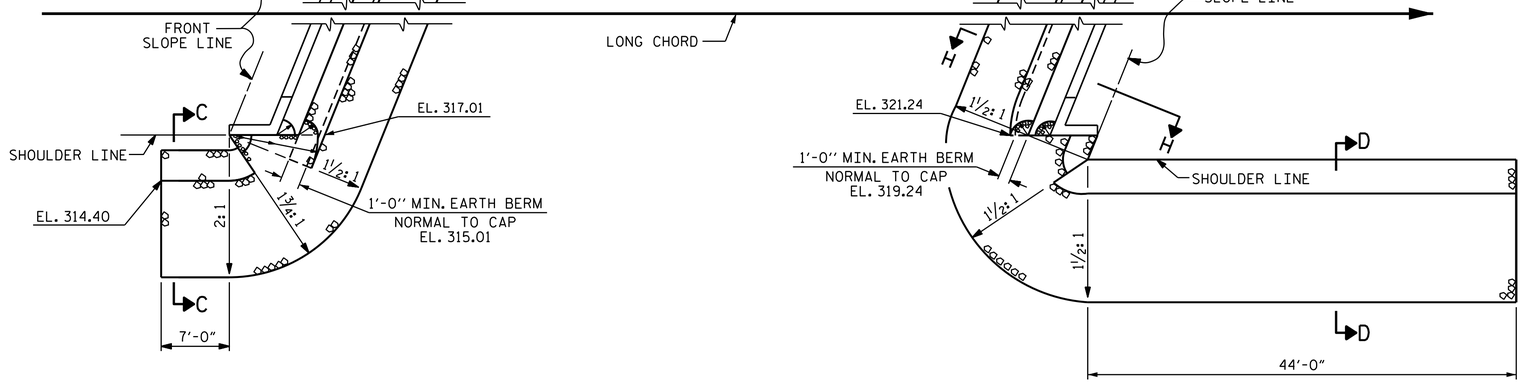

PLAN

END BENT 2

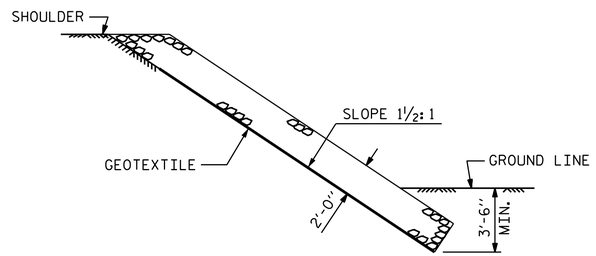

SECTION D-D

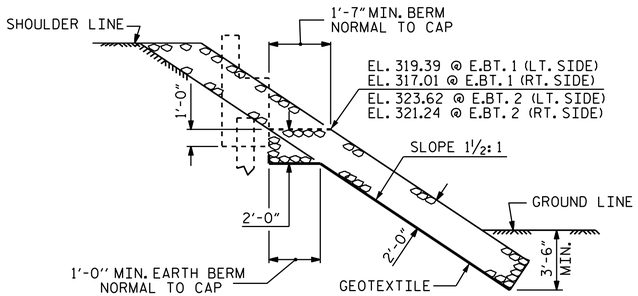

SECTION H-H

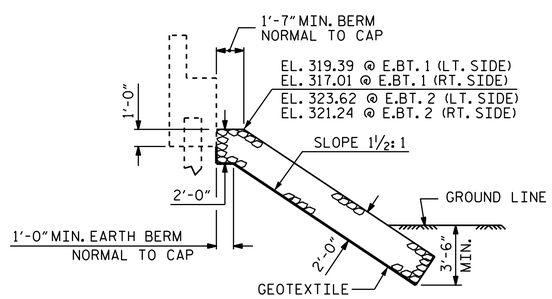

℄ SECTION

BERM RIP RAPPED

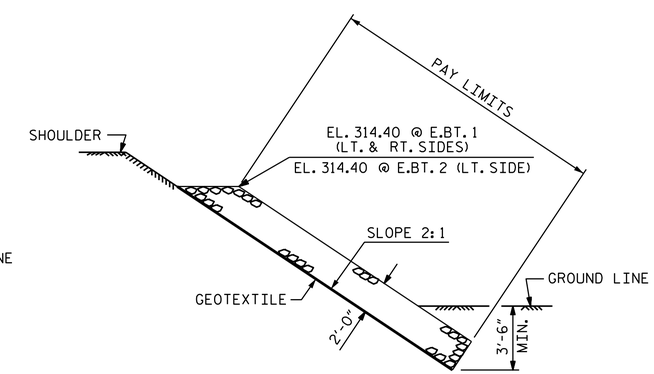

SECTION C-C

PROJECT NO. B-4659

WAKE COUNTY

STATION: 16+15.00 -L-

NORTH CAROLINA PROFESSIONAL SEAL 14855 ENGINEER DOUGLAS R. CALHOUN

DocuSigned by: Douglas R. Calhoun
430196F9D5E0429...
1/20/2015

STATE OF NORTH CAROLINA
DEPARTMENT OF TRANSPORTATION
RALEIGH

STANDARD

RIP RAP DETAILS

ASSEMBLED BY :	A. SORSENGINH	DATE :	1/2014
CHECKED BY :	D. R. CALHOUN	DATE :	12/2014

DRAWN BY : REK 1/84	REV. 5/1/06R	TLA/GM
CHECKED BY : RDU 1/84	REV. 10/1/11	MAA/GM
	REV. 12/21/11	MAA/GM

REVISIONS						SHEET NO.
NO.	BY:	DATE:	NO.	BY:	DATE:	S-30
1			3			TOTAL SHEETS
2			4			32

20-JAN-2015 15:47
E:\TIPProjects-B\B4659\Structures\Plans\MISCELLANEOUS\B-4659_SD_RR.dgn
pknewton

STD. NO. RR1