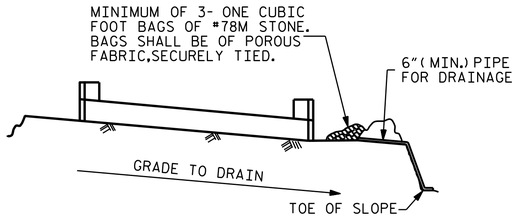

BAGGED STONE AND PIPE SHALL BE PLACED IMMEDIATELY AFTER COMPLETION OF END BENT EXCAVATION. PIPE MAY BE EITHER CONCRETE, CORRUGATED STEEL, CORRUGATED ALUMINUM ALLOY, OR CORRUGATED PLASTIC. PERFORATED PIPE WILL NOT BE ALLOWED.

BAGGED STONE SHALL REMAIN IN PLACE UNTIL THE ENGINEER DIRECTS THAT IT BE REMOVED. THE CONTRACTOR SHALL REMOVE AND DISPOSE OF SILT ACCUMULATIONS AT BAGGED STONE WHEN SO DIRECTED BY THE ENGINEER. BAGS SHALL BE REMOVED AND REPLACED WHENEVER THE ENGINEER DETERMINES THAT THEY HAVE DETERIORATED AND LOST THEIR EFFECTIVENESS.

NO SEPARATE PAYMENT WILL BE MADE FOR THIS WORK AND THE ENTIRE COST OF THIS WORK SHALL BE INCLUDED IN THE UNIT CONTRACT PRICE BID FOR THE SEVERAL PAY ITEMS.

TEMPORARY DRAINAGE AT END BENT

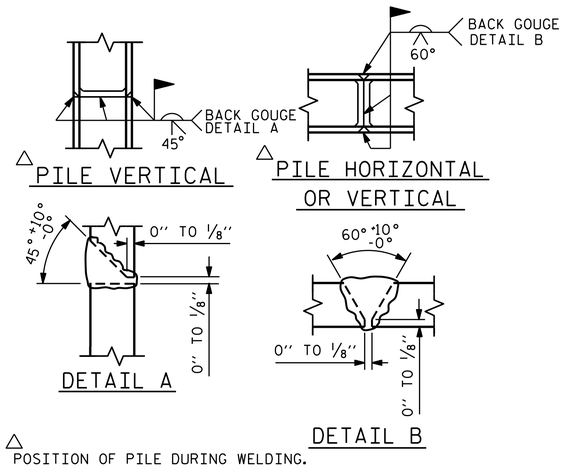

△ POSITION OF PILE DURING WELDING.

PILE SPLICE DETAILS

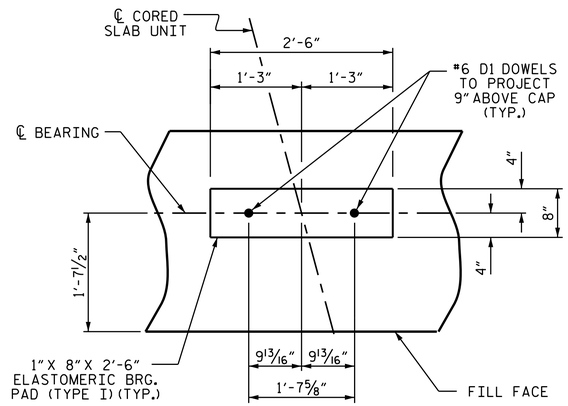

DETAIL "A"

(END BENT 1 SHOWN, END BENT 2 SIMILAR BY ROTATION)

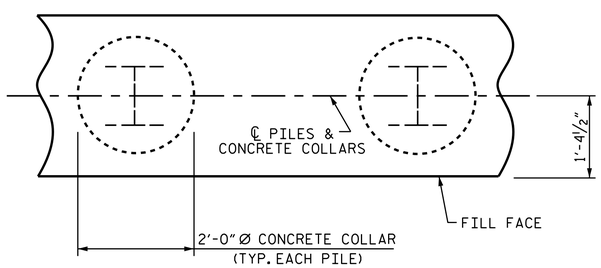

PLAN

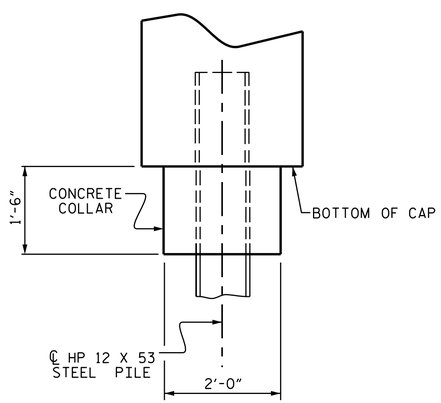

ELEVATION

CORROSION PROTECTION FOR STEEL PILES DETAIL

(END BENT 1 SHOWN, END BENT 2 SIMILAR BY ROTATION)

BAR TYPES

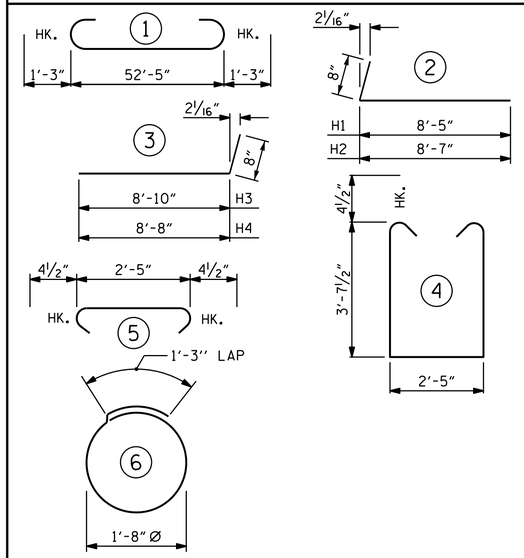

ALL BAR DIMENSIONS ARE OUT TO OUT.

END BENT No. 1	
HP 12 X 53 STEEL PILES	
NO: 7	LIN. FT.= 105
STEEL PILE POINTS	NO: 7

END BENT No. 2	
HP 12 X 53 STEEL PILES	
NO: 7	LIN. FT.= 160
STEEL PILE POINTS	NO: 7

BILL OF MATERIAL FOR END BENT 1

BAR	NO.	SIZE	TYPE	LENGTH	WEIGHT
B1	8	#9	1	54'-11"	1494
B2	28	#4	STR	27'-6"	514
B3	14	#4	STR	2'-5"	23
D1	30	#6	STR	1'-6"	68
H1	10	#4	2	9'-1"	61
H2	10	#4	2	9'-3"	62
H3	10	#4	3	9'-6"	63
H4	10	#4	3	9'-4"	62
K1	8	#4	STR	3'-3"	17
K2	8	#4	STR	4'-1"	22
S1	68	#4	4	10'-5"	473
S2	68	#4	5	3'-2"	144
S3	28	#4	6	6'-6"	122
V1	26	#4	STR	5'-10"	101
V2	29	#4	STR	6'-9"	131

REINFORCING STEEL (FOR ONE END BENT) 3,357 LBS.

CLASS A CONCRETE BREAKDOWN (FOR ONE END BENT)

POUR #1 CAP, LOWER PART OF WINGS & COLLARS 25.1 C.Y.

POUR #2 UPPER PART OF WINGS 2.2 C.Y.

TOTAL CLASS A CONCRETE 27.3 C.Y.

BILL OF MATERIAL FOR END BENT 2

BAR	NO.	SIZE	TYPE	LENGTH	WEIGHT
B1	8	#9	1	54'-11"	1494
B2	28	#4	STR	27'-6"	514
B3	14	#4	STR	2'-5"	23
D1	30	#6	STR	1'-6"	68
H1	10	#4	2	9'-1"	61
H2	10	#4	2	9'-3"	62
H3	10	#4	3	9'-6"	63
H4	10	#4	3	9'-4"	62
K3	8	#4	STR	4'-1"	22
K4	8	#4	STR	3'-3"	17
S1	68	#4	4	10'-5"	473
S2	68	#4	5	3'-2"	144
S3	28	#4	6	6'-6"	122
V1	27	#4	STR	5'-10"	105
V2	28	#4	STR	6'-9"	126

REINFORCING STEEL (FOR ONE END BENT) 3,356 LBS.

CLASS A CONCRETE BREAKDOWN (FOR ONE END BENT)

POUR #1 CAP, LOWER PART OF WINGS & COLLARS 25.1 C.Y.

POUR #2 UPPER PART OF WINGS 2.2 C.Y.

TOTAL CLASS A CONCRETE 27.3 C.Y.

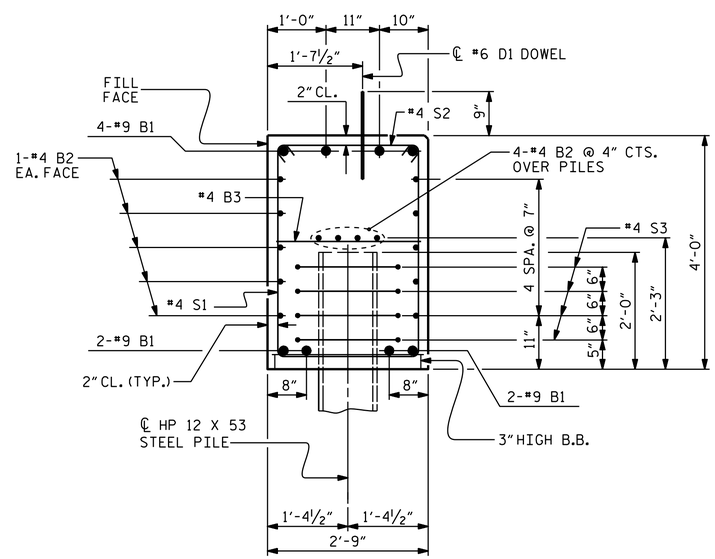

SECTION A-A

(CONCRETE COLLAR NOT SHOWN FOR CLARITY. SEE "CORROSION PROTECTION FOR STEEL PILES DETAIL.")

NORTH CAROLINA PROFESSIONAL SEAL 14855 ENGINEER DOUGLAS R. CALHOUN

DocuSigned by: Douglas R. Calhoun 430196F9D5E0429...

1/20/2015

PROJECT NO. B-4659

WAKE COUNTY

STATION: 16+15.00 -L-

SHEET 5 OF 5

STATE OF NORTH CAROLINA
DEPARTMENT OF TRANSPORTATION
RALEIGH

SUBSTRUCTURE

END BENT 1 & 2 DETAILS

REVISIONS							
NO.	BY:	DATE:	NO.	BY:	DATE:	SHEET NO.	S-25
1			3			TOTAL SHEETS	32
2			4				

DRAWN BY : A. K. PATEL DATE : 10/2013
CHECKED BY : A. SORSENGINH DATE : 1/2014
DESIGN ENGINEER OF RECORD: A. K. PATEL DATE : 2/2014

20-JAN-2015 15:46
E:\TIPProjects-B\B4659\Structures\Plans\SUBSTRUCTURE\B-4659_SD_E*_01.dgn
pknewton