NOTES

ALL REINFORCING STEEL IN PARAPETS AND END POSTS SHALL BE EPOXY COATED.

GROOVED CONTRACTION JOINTS, 1/2" IN DEPTH, SHALL BE TOOLED IN ALL EXPOSED FACES OF THE PARAPET AND IN ACCORDANCE WITH ARTICLE 825-10(B) OF THE STANDARD SPECIFICATIONS. A CONTRACTION JOINT SHALL BE LOCATED AT EACH THIRD POINT BETWEEN PARAPET EXPANSION JOINTS. ONLY ONE CONTRACTION JOINT IS REQUIRED AT MIDPOINT OF PARAPET SEGMENTS LESS THAN 20 FEET IN LENGTH AND NO CONTRACTION JOINTS ARE REQUIRED FOR THOSE SEGMENTS LESS THAN 10 FEET IN LENGTH.

✱✱ #5 S3 BARS INCLUDED IN BILL OF MATERIAL FOR CORED SLAB UNIT.

PAYMENT FOR THE END POSTS SHALL BE INCLUDED IN THE PAY ITEM FOR "1'-2" X 2'-9 3/8" CONCRETE PARAPET."

BILL OF MATERIAL

FOR 1 PARAPET & 2 END POSTS

BAR	NO.	SIZE	TYPE	LENGTH	WEIGHT
✱ B11	32	#5	STR	11'-8"	389
✱ B12	64	#5	STR	14'-2"	946
✱ E1	4	#7	STR	2'-11"	24
✱ E2	4	#7	STR	3'-4"	27
✱ E3	4	#7	STR	3'-10"	31
✱ E4	4	#7	STR	4'-4"	35
✱ E5	4	#7	STR	4'-9"	39
✱ F1	4	#6	STR	2'-1"	13
✱ F2	2	#6	STR	3'-0"	9
✱ F3	2	#6	STR	3'-8"	11
✱ F4	2	#6	STR	3'-2"	10
✱ F5	2	#6	STR	3'-11"	12
✱ S4	132	#5	1	5'-9"	792

✱ EPOXY COATED REINFORCING STEEL	LBS.	2338
CLASS AA CONCRETE	CU.YDS.	16.5
1'-2" X 2'-9 3/8" CONCRETE PARAPET	LIN. FT.	140.26

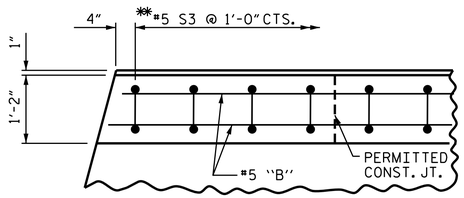

PLAN OF PARAPET

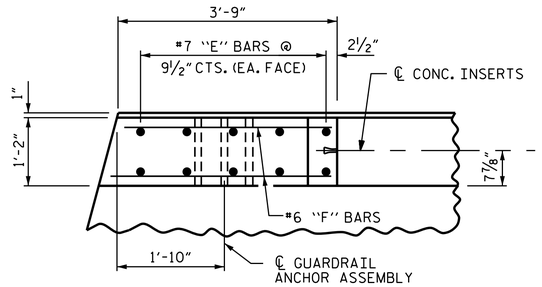

PLAN OF END POST

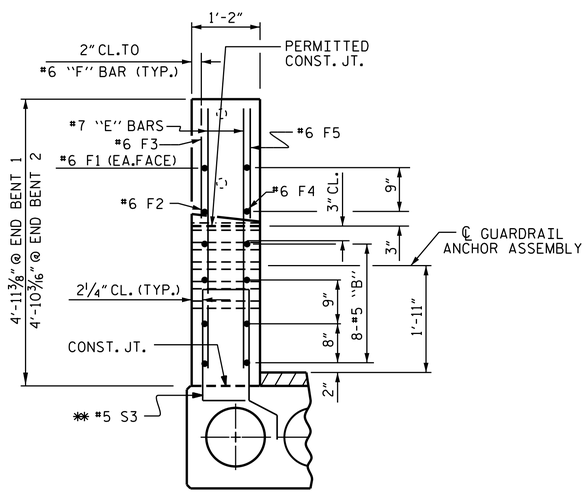

END VIEW

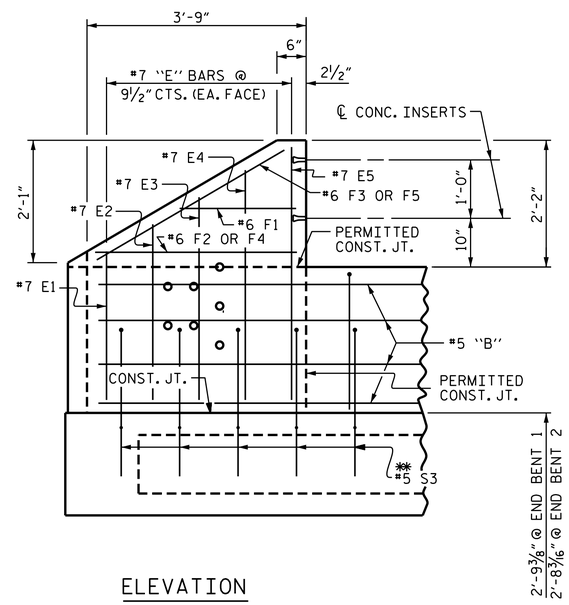

ELEVATION

PARAPET AND END POST FOR TWO BAR METAL RAIL

PARAPET HEIGHT TABLE

LOCATION	PARAPET HEIGHT
℄ BRG. @ END BENT 1	2'-9 3/8"
MID-SPAN OF SPAN A	2'-8 1/2"
℄ BRG. @ BENT 1	2'-9 1/16"
MID-SPAN OF SPAN B	2'-7 5/8"
℄ BRG. @ BENT 2	2'-8 11/16"
MID-SPAN OF SPAN C	2'-7 3/16"
℄ BRG. @ END BENT 2	2'-8 3/16"

PARAPET HEIGHT IS BASED ON PREDICTED FINAL CAMBER AND THEORETICAL GRADE LINE ELEVATIONS AND VARIES BETWEEN ℄ BEARING AND MID-SPAN FOR ALL SPANS.

BAR TYPES

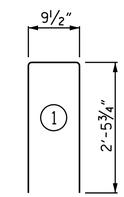

ALL BAR DIMENSIONS ARE OUT TO OUT

PROJECT NO. B-4659

WAKE COUNTY

STATION: 16+15.00 -L-

SHEET 5 OF 7

STATE OF NORTH CAROLINA
DEPARTMENT OF TRANSPORTATION
RALEIGH

CONCRETE PARAPET DETAILS (LEFT SIDE)

NORTH CAROLINA PROFESSIONAL SEAL 14855 ENGINEER DOUGLAS R. CALHOUN

DocuSigned by: Douglas R. Calhoun
430196E9D5E0429...
1/20/2015

REVISIONS						
NO.	BY:	DATE:	NO.	BY:	DATE:	
1			3			
2			4			

SHEET NO. S-11

TOTAL SHEETS 32

DRAWN BY :	A. K. PATEL	DATE :	09/13
CHECKED BY :	A. SORSENGINH	DATE :	12/13
DESIGN ENGINEER OF RECORD:	A. K. PATEL	DATE :	01/14

20-JAN-2015 15:46
E:\TIPProjects-B\B4659\Structures\Plans\SUPERSTRUCTURE\B-4659_SD_CS.dgn
pknewton