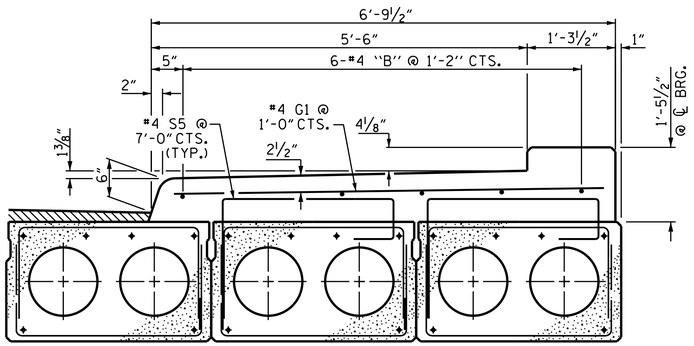

SECTION THROUGH SIDEWALK

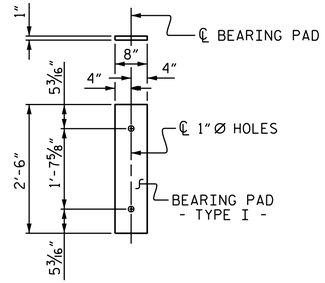

FIXED END
(TYPE I - 90 REQ'D)

ELASTOMERIC BEARING DETAILS

ELASTOMER IN ALL BEARINGS SHALL BE 50 DUROMETER HARDNESS.

BAR TYPES

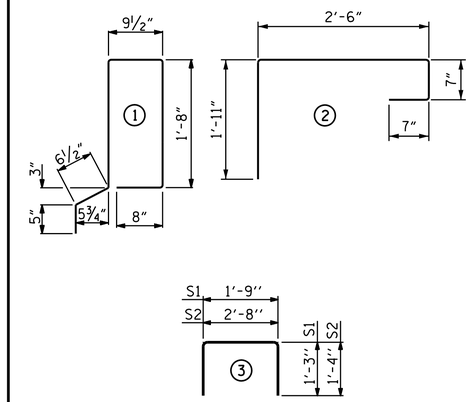

ALL BAR DIMENSIONS ARE OUT TO OUT

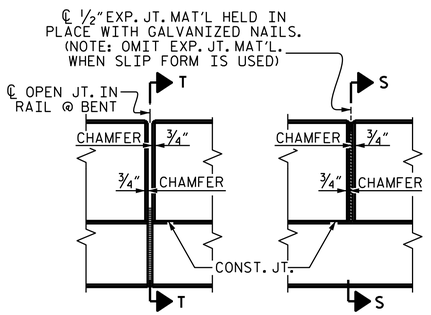

ELEVATION AT EXPANSION JOINTS

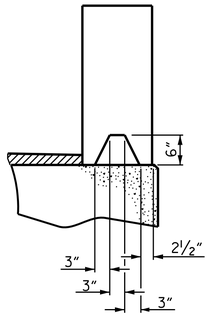

SECTION S-S
AT DAM IN OPEN JOINT
(THIS IS TO BE USED ONLY
WHEN SLIP FORM IS USED)

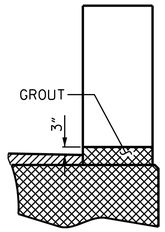

SECTION T-T
AT OPEN JOINT AT BENT
(THIS IS TO BE USED WHERE
FOAM JOINT IS NOT USED)

DEAD LOAD DEFLECTION AND CAMBER	
	3'-0" x 1'-9"
40' CORED SLAB UNIT (SPAN A)	0.6" Ø L.R. STRAND
CAMBER (SLAB ALONE IN PLACE)	⅞" ↑
DEFLECTION DUE TO SUPERIMPOSED DEAD LOAD**	⅛" ↓
FINAL CAMBER	¾" ↑

** INCLUDES FUTURE WEARING SURFACE

DEAD LOAD DEFLECTION AND CAMBER	
	3'-0" x 1'-9"
50' CORED SLAB UNIT (SPAN B & C)	0.6" Ø L.R. STRAND
CAMBER (SLAB ALONE IN PLACE)	1½" ↑
DEFLECTION DUE TO SUPERIMPOSED DEAD LOAD**	¼" ↓
FINAL CAMBER	1¼" ↑

** INCLUDES FUTURE WEARING SURFACE

CORED SLABS REQUIRED (SPAN A)			
	NUMBER	LENGTH	TOTAL LENGTH
40' UNIT			
TYPE I	1	40'-0"	40'-0"
TYPE II	12	40'-0"	480'-0"
TYPE III	1	40'-0"	40'-0"
TYPE IV	1	40'-0"	40'-0"
TOTAL	15		600'-0"

CORED SLABS REQUIRED (SPANS B & C)			
	NUMBER	LENGTH	TOTAL LENGTH
50' UNIT			
TYPE I	2	50'-0"	100'-0"
TYPE II	24	50'-0"	1200'-0"
TYPE III	2	50'-0"	100'-0"
TYPE IV	2	50'-0"	100'-0"
TOTAL	30		1500'-0"

NOTES

ALL PRESTRESSING STRANDS SHALL BE 7-WIRE LOW RELAXATION GRADE 270 STRANDS AND SHALL CONFORM TO AASHTO M203 EXCEPT FOR SAMPLING REQUIREMENTS WHICH SHALL BE IN ACCORDANCE WITH THE STANDARD SPECIFICATIONS.

ALL REINFORCING STEEL CAST WITH THE CORED SLAB SECTIONS SHALL BE GRADE 60 AND SHALL BE INCLUDED IN THE UNIT PRICE BID FOR PRESTRESSED CONCRETE CORED SLABS.

RECESSES FOR TRANSVERSE STRANDS SHALL BE GROUTED AFTER THE TENSIONING OF THE STRANDS.

THE 2½" Ø DOWEL HOLES AT FIXED ENDS OF SLAB SECTIONS SHALL BE FILLED WITH NON-SHRINK GROUT.

THE BACKER RODS SHALL CONFORM TO THE REQUIREMENTS OF TYPE M BOND BREAKER. SEE SECTION 1028 OF THE STANDARD SPECIFICATIONS.

WHEN CORED SLABS ARE CAST, AN INTERNAL HOLD-DOWN SYSTEM SHALL BE EMPLOYED TO PREVENT VOIDS FROM RISING OR MOVING SIDEWAYS. AT LEAST SIX WEEKS PRIOR TO CASTING CORED SLABS, THE CONTRACTOR SHALL SUBMIT TO THE ENGINEER FOR REVIEW AND COMMENT, DETAILED DRAWINGS OF THE PROPOSED HOLD-DOWN SYSTEM. IN ADDITION TO STRUCTURAL DETAILS, LOCATION AND SPACING OF THE HOLD-DOWNS SHALL BE INDICATED.

ALL REINFORCING STEEL IN THE PARAPET AND SIDEWALK SHALL BE EPOXY COATED.

PRESTRESSING STRANDS SHALL BE CUT FLUSH WITH THE CORED SLAB UNIT ENDS.

APPLY EPOXY PROTECTIVE COATING TO CORED SLAB UNIT ENDS.

GROOVED CONTRACTION JOINTS, 1/2" IN DEPTH, SHALL BE TOOLED IN ALL EXPOSED FACES OF THE PARAPET AND IN ACCORDANCE WITH ARTICLE 825-10(B) OF THE STANDARD SPECIFICATIONS. A CONTRACTION JOINT SHALL BE LOCATED AT EACH THIRD POINT BETWEEN PARAPET EXPANSION JOINTS. ONLY ONE CONTRACTION JOINT IS REQUIRED AT MIDPOINT OF PARAPET SEGMENTS LESS THAN 20 FEET IN LENGTH AND NO CONTRACTION JOINTS ARE REQUIRED FOR THOSE SEGMENTS LESS THAN 10 FEET IN LENGTH.

GROOVED CONTRACTION JOINTS 1/2" IN DEPTH, SHALL BE TOOLED IN ALL EXPOSED FACES OF SIDEWALK IN ACCORDANCE WITH ARTICLE 825-10(B) OF THE STANDARD SPECIFICATIONS. THE CONTRACTION JOINTS SHALL BE LOCATED AT A SPACING OF 8 FEET TO 10 FEET BETWEEN EXPANSION JOINTS. NO CONTRACTION JOINTS WILL BE REQUIRED FOR SEGMENTS LESS THAN 10 FEET IN LENGTH.

FLAME CUTTING OF THE TRANSVERSE POST-TENSIONING STRAND IS NOT ALLOWED.

THE TRANSFER OF LOAD FROM THE ANCHORAGES TO THE CORED SLAB UNIT SHALL BE DONE WHEN THE CONCRETE HAS REACHED A COMPRESSIVE STRENGTH OF NOT LESS THAN THE REQUIRED STRENGTH SHOWN IN THE "CONCRETE RELEASE STRENGTH" TABLE.

FOR GROUT FOR STRUCTURES, SEE SPECIAL PROVISIONS.

THE PERMITTED THREADED INSERTS ARE DETAILED AS AN OPTION FOR THE CONTRACTOR TO ATTACH FALSEWORK AND FORMWORK DURING CONSTRUCTION.

THE PERMITTED THREADED INSERTS IN THE EXTERIOR UNITS SHALL BE SIZED BY THE CONTRACTOR, SPACED AT 4'-0" CENTERS AND GALVANIZED IN ACCORDANCE WITH SECTION 1076 OF THE STANDARD SPECIFICATIONS. STAINLESS STEEL THREADED INSERTS MAY BE USED AS AN ALTERNATE.

THE PERMITTED THREADED INSERTS SHALL BE GROUTED BY THE CONTRACTOR IMMEDIATELY FOLLOWING REMOVAL OF THE FALSEWORK.

THE COST OF THE PERMITTED THREADED INSERTS SHALL BE INCLUDED IN THE PRICE BID FOR THE PRECAST UNITS.

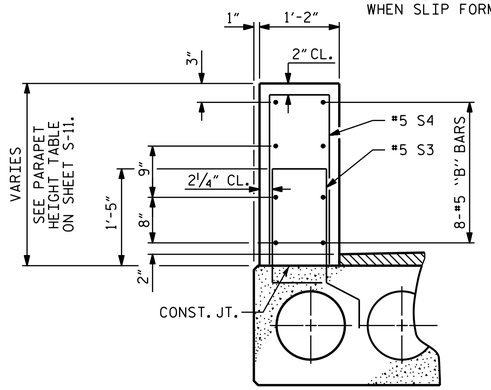

TWO BAR METAL RAIL PARAPET SECTION ON CORED SLABS

BILL OF MATERIAL FOR ONE 40' CORED SLAB UNIT											
				EXT. UNIT TYPE I		INT. UNIT TYPE II		INT. UNIT TYPE III		EXT. UNIT TYPE IV	
BAR	NUMBER	SIZE	TYPE	LENGTH	WEIGHT	LENGTH	WEIGHT	LENGTH	WEIGHT	LENGTH	WEIGHT
B4	4	#4	STR	20'-9"	55	20'-9"	55	20'-9"	55	20'-9"	55
S1	8	#5	3	4'-3"	35	4'-3"	35	4'-3"	35	4'-3"	35
S2	98	#4	3	5'-4"	349	5'-4"	349	5'-4"	349	5'-4"	349
* S3	40	#5	1	5'-9"	240						
* S5	6	#4	2					5'-7"	22	5'-7"	22
REINFORCING STEEL			LBS.		439		439		439		439
* EPOXY COATED REINFORCING STEEL			LBS.		240				22		22
5000 P.S.I. CONCRETE			CU. YDS.		5.8		5.8		5.8		5.8
0.6" Ø L.R. STRANDS			No.		13		13		13		13

BILL OF MATERIAL FOR ONE 50' CORED SLAB UNIT											
				EXT. UNIT TYPE I		INT. UNIT TYPE II		INT. UNIT TYPE III		EXT. UNIT TYPE IV	
BAR	NUMBER	SIZE	TYPE	LENGTH	WEIGHT	LENGTH	WEIGHT	LENGTH	WEIGHT	LENGTH	WEIGHT
B6	4	#4	STR	25'-9"	69	25'-9"	69	25'-9"	69	25'-9"	69
S1	8	#5	3	4'-3"	35	4'-3"	35	4'-3"	35	4'-3"	35
S2	118	#4	3	5'-4"	420	5'-4"	420	5'-4"	420	5'-4"	420
* S3	50	#5	1	5'-9"	300						
* S5	8	#4	2					5'-7"	30	5'-7"	30
REINFORCING STEEL			LBS.		524		524		524		524
* EPOXY COATED REINFORCING STEEL			LBS.		300				30		30
6500 P.S.I. CONCRETE			CU. YDS.		7.3		7.3		7.3		7.3
0.6" Ø L.R. STRANDS			No.		19		19		19		19

GRADE 270 STRANDS	
	0.6" Ø L.R.
AREA (SQUARE INCHES)	0.217
ULTIMATE STRENGTH (LBS. PER STRAND)	58,600
APPLIED PRESTRESS (LBS. PER STRAND)	43,950

CONCRETE RELEASE STRENGTH	
UNIT	PSI
40' UNITS	4000
50' UNITS	4900

GUTTERLINE ASPHALT THICKNESS		
36'-10½" CLEAR ROADWAY	LEFT GUTTERLINE	RIGHT GUTTERLINE
	@ MID-SPAN	@ MID-SPAN
SPAN A	3"	2"
SPAN B	2 3/16"	1½"
SPAN C	1¾"	1½"

PROJECT NO. B-4659
WAKE COUNTY
STATION: 16+15.00 -L-

SHEET 4 OF 7

STATE OF NORTH CAROLINA
DEPARTMENT OF TRANSPORTATION
RALEIGH

3'-0" X 1'-9"
PRESTRESSED CONCRETE
CORED SLAB UNIT
105° SKEW

NORTH CAROLINA PROFESSIONAL SEAL 14855 ENGINEER DOUGLAS R. CALHOUN

DOCUMENT NOT CONSIDERED FINAL UNLESS ALL SIGNATURES COMPLETED
Douglas R. Calhoun
1/20/2015

REVISIONS						SHEET NO.
NO.	BY:	DATE:	NO.	BY:	DATE:	S-10
1			3			TOTAL SHEETS
2			4			32

DRAWN BY : A. K. PATEL DATE : 09/13
CHECKED BY : A. SORSENGINH DATE : 12/13
DESIGN ENGINEER OF RECORD: A. K. PATEL DATE : 01/14

20-JAN-2015 15:46
E:\TIPProjects-B\B4659\Structures\Plans\SUPERSTRUCTURE\B-4659_SD_CS.dgn
pknewton