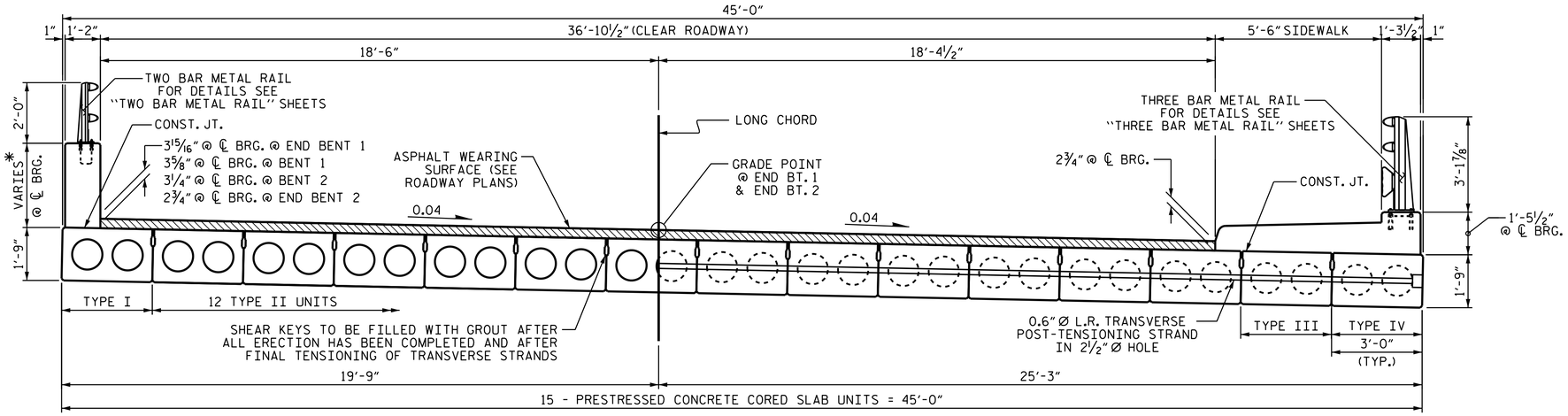

HALF SECTION
THROUGH VOIDS

HALF SECTION
AT INTERMEDIATE DIAPHRAGMS

TYPICAL SECTION

* - THE MAXIMUM PARAPET/SIDEWALK HEIGHT AND ASPHALT THICKNESS IS SHOWN. THE HEIGHT OF THE PARAPET/SIDEWALK AND ASPHALT THICKNESS VARIES WHILE THE TOP OF THE PARAPET/SIDEWALK FOLLOWS THE PROFILE OF THE GUTTERLINE. FOR PARAPET/SIDEWALK HEIGHT DETAILS, SEE SHEETS S-11 AND S-13.

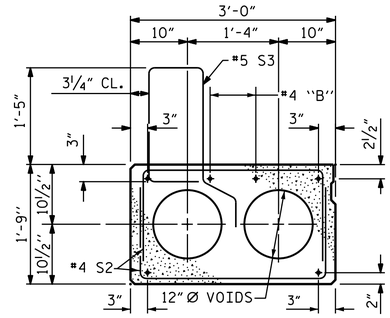

TYPE I
LEFT EXTERIOR UNIT

PERMITTED THREADED INSERT CAST IN OUTSIDE FACE OF EXTERIOR UNIT AND RECESSED ⅜" SIZE TO BE DETERMINED BY CONTRACTOR.

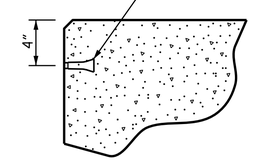

THREADED INSERT DETAIL

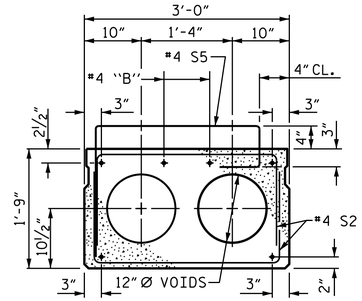

TYPE III
INTERIOR UNIT UNDER SIDEWALK

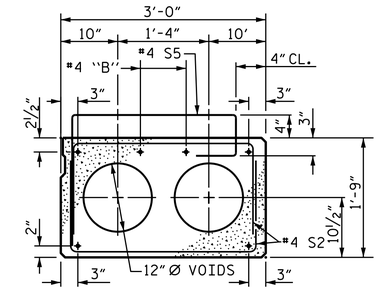

TYPE IV
RIGHT EXTERIOR UNIT

CORED SLAB SECTIONS

FOR PRESTRESSED STRAND LAYOUT, SEE TYPE II UNIT SECTIONS IN EACH SPAN

FIXED END

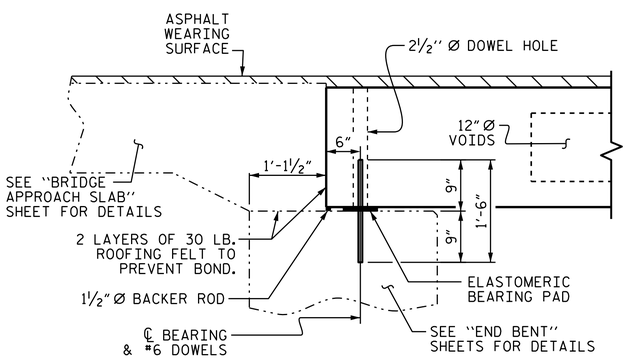

SECTION AT END BENT

END BENT 1 SHOWN, END BENT 2 SIMILAR

FIXED END FIXED END

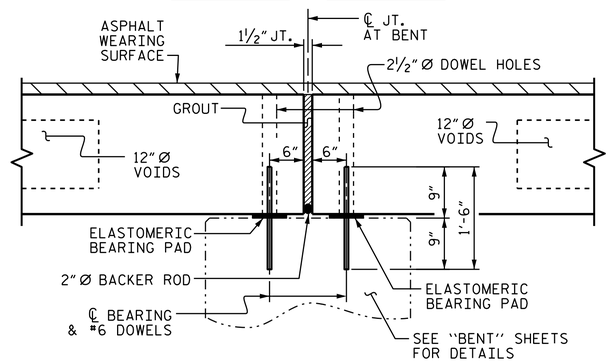

SECTION AT BENT

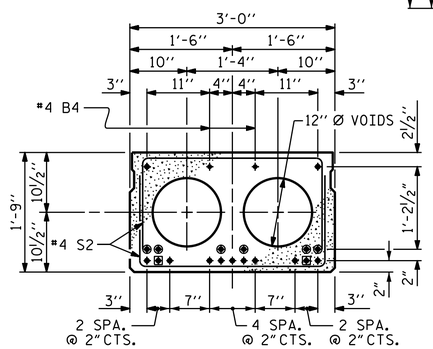

TYPE II INTERIOR SLAB SECTION
(40' UNIT, SPAN A)
(13 STRANDS REQUIRED)

▲ BOND SHALL BE BROKEN ON THESE STRANDS FOR A DISTANCE OF 6'-0" FROM END OF CORED SLAB UNIT. SEE STANDARD SPECIFICATIONS, ARTICLE 1078-7.

◨ BOND SHALL BE BROKEN ON THESE STRANDS FOR A DISTANCE OF 2'-0" FROM END OF CORED SLAB UNIT. SEE STANDARD SPECIFICATIONS, ARTICLE 1078-7.

◉ OPTIONAL FULL LENGTH DEBONDED STRANDS. THESE STRANDS ARE NOT REQUIRED. IF THE FABRICATOR CHOOSES TO INCLUDE THESE STRANDS IN THE CORED SLAB UNIT, THE STRANDS SHALL BE DEBONDED FOR THE FULL LENGTH OF THE UNIT AT NO ADDITIONAL COST. SEE STANDARD SPECIFICATIONS, ARTICLE 1078-7.

DEBONDING LEGEND

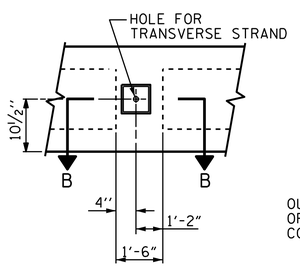

ELEVATION VIEW

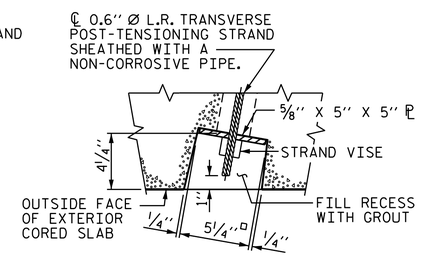

SECTION B-B

GROUTED RECESS AT END OF POST-TENSIONED STRAND OF CORED SLABS

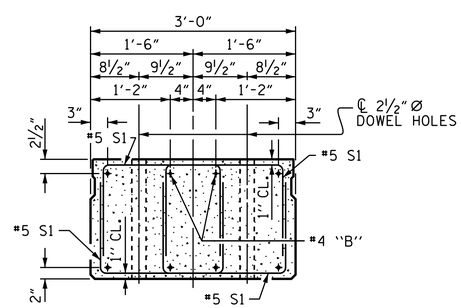

END ELEVATION

SHOWING PLACEMENT OF DOUBLE STIRRUPS AND LOCATION OF DOWEL HOLES. (STRAND LAYOUT NOT SHOWN.) INTERIOR SLAB UNIT SHOWN-EXTERIOR SLAB UNIT SIMILAR EXCEPT SHEAR KEY LOCATION.

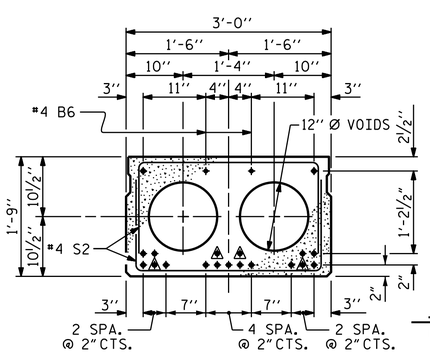

TYPE II INTERIOR SLAB SECTION
(50' UNIT, SPANS B & C)
(19 STRANDS REQUIRED)

0.6" Ø LOW RELAXATION STRAND LAYOUT

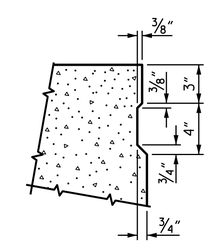

SHEAR KEY DETAIL

NOTE: OMIT SHEAR KEY ON OUTSIDE FACE OF EXTERIOR CORED SLABS.

PROJECT NO. B-4659
WAKE COUNTY
STATION: 16+15.00 -L-

SHEET 1 OF 7

STATE OF NORTH CAROLINA
DEPARTMENT OF TRANSPORTATION
RALEIGH

3'-0" X 1'-9" PRESTRESSED CONCRETE CORED SLAB UNIT 105° SKEW

NORTH CAROLINA PROFESSIONAL SEAL 14855 ENGINEER DOUGLAS R. CALHOUN
DOCUSIGNED BY: Douglas R. Calhoun
E3D19BF9DDE0429...
1/20/2015

REVISIONS						SHEET NO.
NO.	BY:	DATE:	NO.	BY:	DATE:	S-7
1			3			TOTAL SHEETS
2			4			32

DRAWN BY : A. K. PATEL DATE : 09/13
CHECKED BY : A. SORSENGINH DATE : 12/13
DESIGN ENGINEER OF RECORD: A. K. PATEL DATE : 01/14

20-JAN-2015 15:46
E:\TIPProjects-B\B4659\Structures\Plans\SUPERSTRUCTURE\B-4659_SD_CS.dgn
pknewton