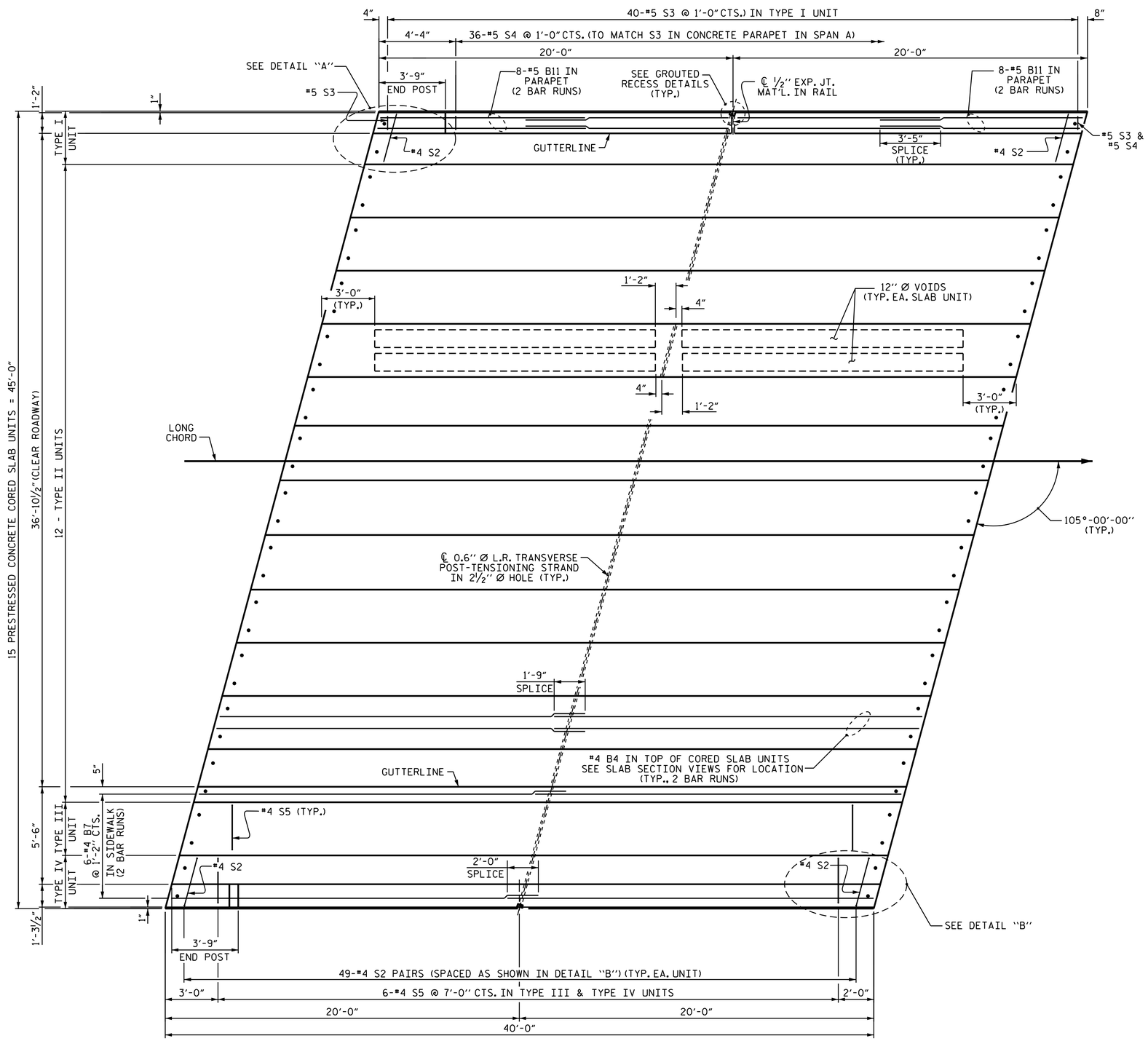

PLAN OF UNIT

FOR SIDEWALK DETAILS, SEE "SIDEWALK DETAILS" SHEET.

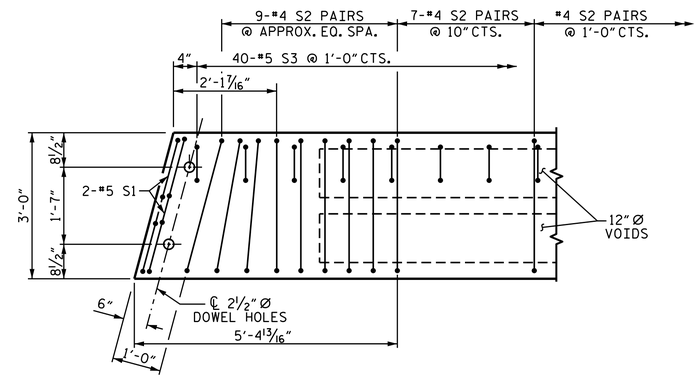

DETAIL "A"

(SIMILAR EACH END OF UNIT)
NOTE: TYPE I UNIT SHOWN - TYPE II UNIT SIMILAR EXCEPT OMIT #5 S3 BARS.

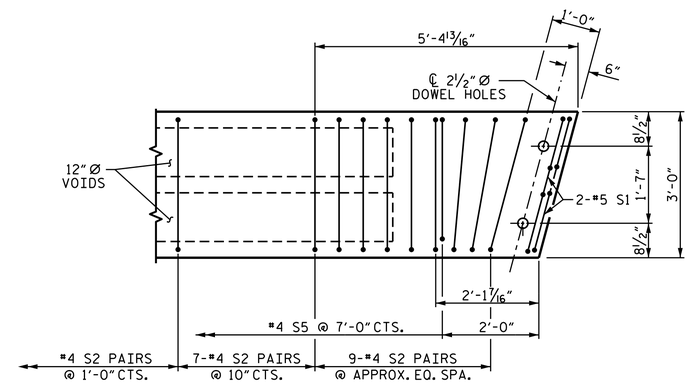

DETAIL "B"

(SIMILAR EACH END OF UNIT)
NOTE: TYPE III AND IV UNITS SHOWN

PROJECT NO. B-4659
WAKE COUNTY
STATION: 16+15.00 -L-

SHEET 2 OF 7

STATE OF NORTH CAROLINA
DEPARTMENT OF TRANSPORTATION
RALEIGH

PLAN OF 40' UNIT 36'-10 1/2" CLEAR ROADWAY 105° SKEW (SPAN A)

NORTH CAROLINA PROFESSIONAL SEAL 14855 ENGINEER DOUGLAS R. CALHOUN

DocuSigned by: Douglas R. Calhoun
430196F9D5E0429...
1/20/2015

REVISIONS							SHEET NO.
NO.	BY:	DATE:	NO.	BY:	DATE:		S-8
1			3				TOTAL SHEETS
2			4				32

DRAWN BY :	A. K. PATEL	DATE :	09/13
CHECKED BY :	A. SORSENGINH	DATE :	12/13
DESIGN ENGINEER OF RECORD:	A. K. PATEL	DATE :	01/14

20-JAN-2015 15:46
E:\TIPProjects-B\B4659\Structures\Plans\SUPERSTRUCTURE\B-4659_SD_CS.dgn
pknewton