PROJECT REFERENCE NO.	SHEET NO.
B-4659	2A-1
ROADWAY DESIGN ENGINEER	PAVEMENT DESIGN ENGINEER

NORTH CAROLINA PROFESSIONAL SEAL 033298 ENGINEER JEFFREY L. TEAGUE — DocuSigned by: 12/16/2014 — 70BBE05F6BD0474...

NORTH CAROLINA PROFESSIONAL SEAL 039819 ENGINEER LAJONYA T. HEYWARD — DocuSigned by: 12/18/2014 — C2F5F705B2C4413...

PAVEMENT SCHEDULE

(FINAL PAVEMENT DESIGN)

C1	PROP. APPROX. 3″ ASPHALT CONCRETE SURFACE COURSE, TYPE S9.5B, AT AN AVERAGE RATE OF 168 LBS. PER SQ. YD. IN EACH OF TWO LAYERS.
C2	PROP. APPROX. 1½″ ASPHALT CONCRETE SURFACE COURSE, TYPE S9.5B, AT AN AVERAGE RATE OF 168 LBS. PER SQ. YD.
C3	PROP. VAR. DEPTH ASPHALT CONCRETE SURFACE COURSE, TYPE S9.5B, AT AN AVERAGE RATE OF 112 LBS. PER SQ. YD. PER 1″ DEPTH, TO BE PLACED IN LAYERS NOT TO EXCEED 2″ IN DEPTH.
D1	PROP. APPROX. 4″ ASPHALT CONCRETE INTERMEDIATE COURSE, TYPE I19.0B, AT AN AVERAGE RATE OF 456 LBS. PER SQ. YD.
D2	PROP. VAR. DEPTH ASPHALT CONCRETE INTERMEDIATE COURSE, TYPE I19.0B, AT AN AVERAGE RATE OF 114 LBS. PER SQ. YD. PER 1″ DEPTH, TO BE PLACED IN LAYERS NOT LESS THAN 2½″ IN DEPTH OR GREATER THAN 4″ IN DEPTH.
E1	PROP. APPROX. 4″ ASPHALT CONCRETE BASE COURSE, TYPE B25.0B, AT AN AVERAGE RATE OF 456 LBS. PER SQ. YD.
E2	PROP. VAR. DEPTH ASPHALT CONCRETE BASE COURSE, TYPE B25.0B, AT AN AVERAGE RATE OF 114 LBS. PER SQ. YD. PER 1″ DEPTH, TO BE PLACED IN LAYERS NOT LESS THAN 3″ IN DEPTH OR GREATER THAN 5½″ IN DEPTH.
R1	2′-6″ CONCRETE CURB AND GUTTER.
S	4″ CONCRETE SIDEWALK.
T	EARTH MATERIAL.
U	EXISTING PAVEMENT.
W	VARIABLE DEPTH ASPHALT PAVEMENT (SEE DETAIL SHOWING METHOD OF WEDGING.)

NOTE: PAVEMENT EDGE SLOPES ARE 1:1 UNLESS SHOWN OTHERWISE.

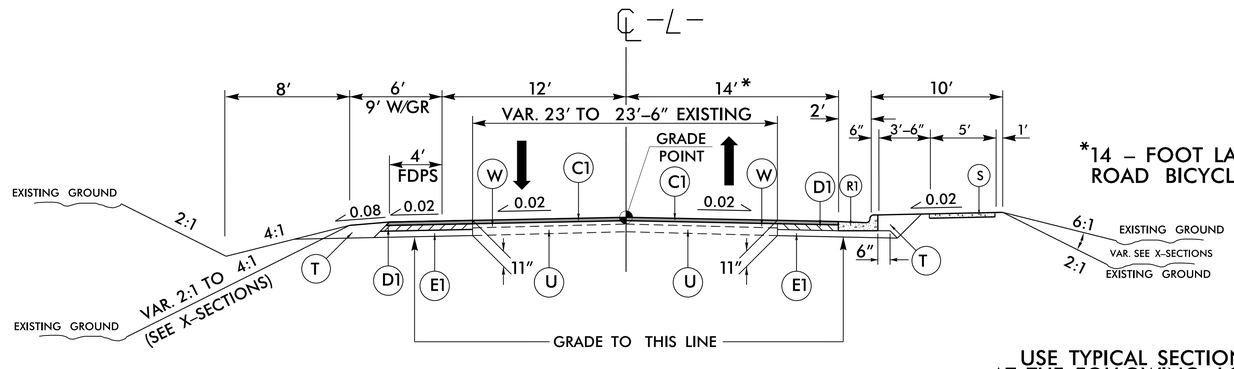

*14 – FOOT LANE USED FOR SHARE THE ROAD BICYCLE ACCOMODATION.

TYPICAL SECTION NO. 1

USE TYPICAL SECTION NO. 1 AT THE FOLLOWING LOCATIONS:

–L– STA. 10+90.00 TO –L– STA. 13+75.00

NOTE: OVERLAY EXISTING PAVEMENT WITH 1½″ OF S9.5B(C2) FROM –L– STA. 10+25.00 TO –L– STA. 10+90.00

NOTE: SEE PLANS FOR SIDEWALK LIMITS

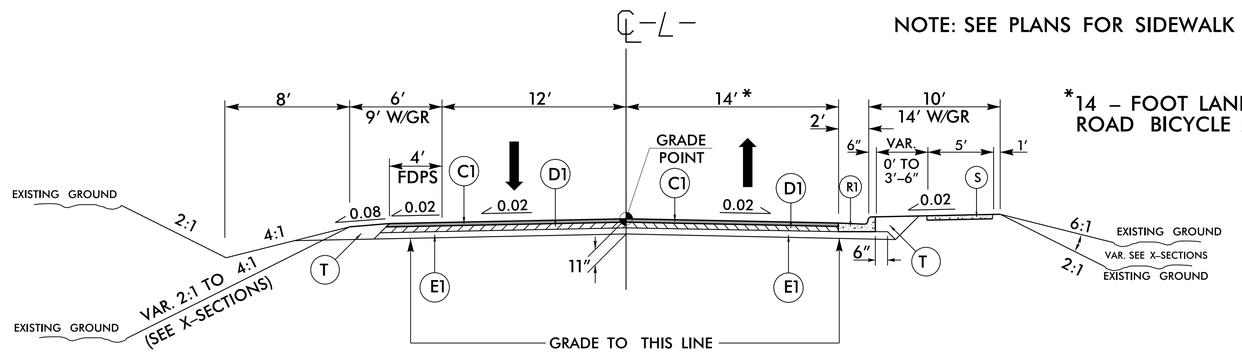

*14 – FOOT LANE USED FOR SHARE THE ROAD BICYCLE ACCOMODATION.

TYPICAL SECTION NO. 2

USE TYPICAL SECTION NO. 2 AT THE FOLLOWING LOCATIONS:

–L– STA. 13+75.00 TO –L– STA. 15+43.65 (BEGIN BRIDGE)

–L– STA. 16+86.35 (END BRIDGE) TO –L– STA. 22+50.00

NOTE: SEE PLANS FOR SIDEWALK LIMITS

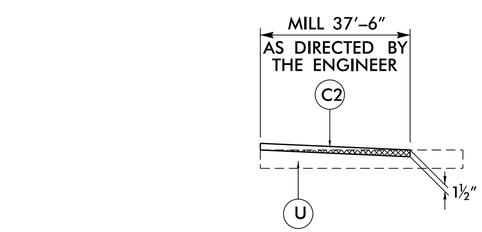

DETAIL OF INCIDENTAL MILLING

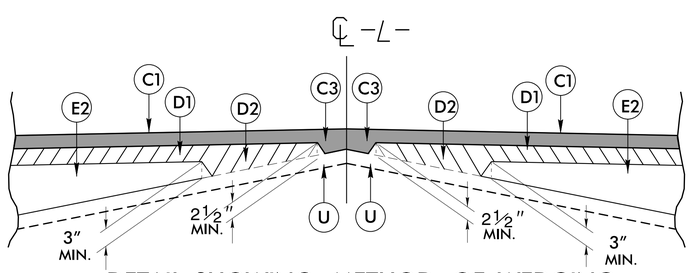

DETAIL SHOWING METHOD OF WEDGING

USE IN CONJUNCTION WITH TYPICAL SECTION NO. 1

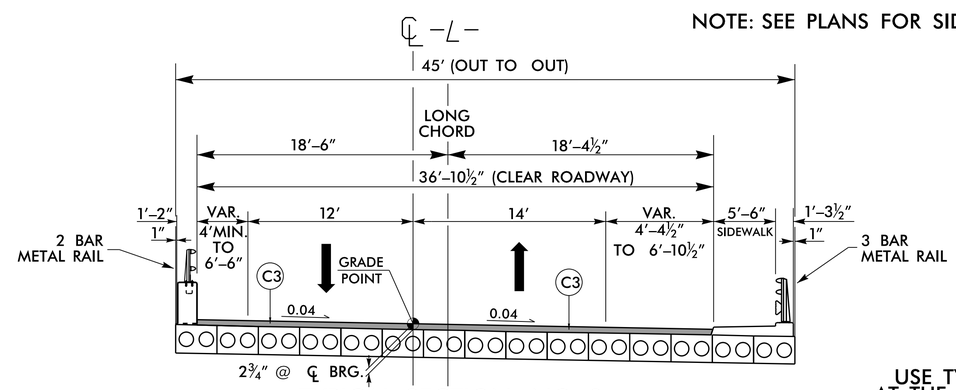

TYPICAL SECTION NO. 3

CORED SLAB BRIDGE
SEE STRUCTURE PLANS

USE TYPICAL SECTION NO. 3 AT THE FOLLOWING LOCATION:

–L– STA. 15+43.65 (BEGIN BRIDGE) TO

–L– STA. 16+86.35 (END BRIDGE)

6/2/99

09-DEC-2014 13:37
R:\Roadway\Proj\B-4659_Rdy_typ.dgn
$$USERNAME$$