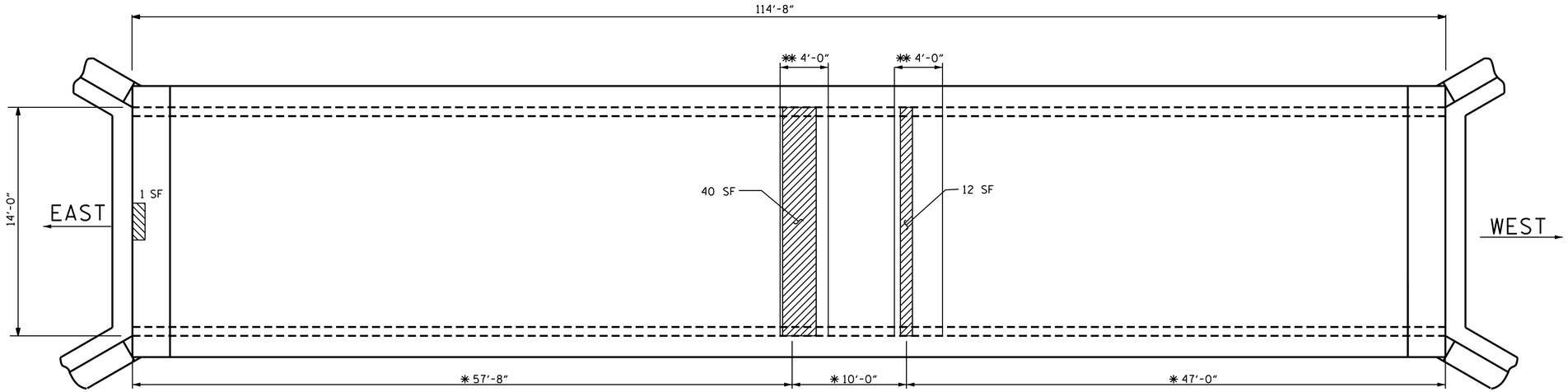

TOP SLAB

NOTES:

REPAIR LOCATIONS AND ESTIMATE OF QUANTITIES ARE GIVEN WITH THE BEST INFORMATION AVAILABLE. IF ADDITIONAL REPAIRS NOT SHOWN ON THE DRAWINGS ARE DEEMED NECESSARY BY THE ENGINEER, THE ENGINEER SHALL NOTE ON THE DRAWINGS THE APPROXIMATE LOCATION AND DESCRIPTION OF THE REPAIRS AND ADJUST THE ACTUAL QUANTITIES ENTERED INTO THE REPAIR QUANTITY TABLE.

THE CONTRACTOR SHALL INSTALL A PLASTIC WATERSTOP FULL LENGTH ALONG THE TOP SLAB JOINT REPAIRS PRIOR TO PLACEMENT OF SHOTCRETE. THE COST OF THE PLASTIC WATERSTOP SHALL BE INCIDENTAL TO THE VARIOUS PAY ITEMS.

✱ CONFIRM JOINT CRACK LOCATION DIMENSIONS BEFORE EXCAVATION FOR EXTERNAL TOP AND SIDE OF CULVERT SEALING PROCESS.

✱✱ THE 4'-0" EXTERNAL JOINT SEALING WIDTH AND 5'-0" DEPTH DIMENSION SHOWN ON THE PLANS FOR SEALING THE TOP SLAB AND FILL FACE OF EXTERIOR WALLS IS ESTIMATED AND MAY VARY AS DIRECTED BY THE ENGINEER.

CARE SHALL BE TAKEN DURING BACKFILL AND COMPACTION OPERATION TO PREVENT DAMAGE TO THE JOINT SEALER WRAP.

SHOTCRETE REPAIR

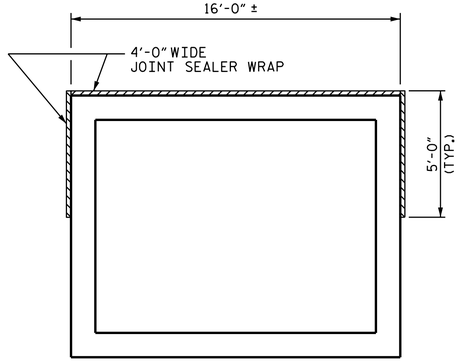

EXTERNAL JOINT SEAL DETAIL

TOP SLAB REPAIR QUANTITY TABLE

CULVERT REPAIRS	QUANTITIES			
	ESTIMATE		ACTUAL	
SHOTCRETE REPAIRS	AREA SF	VOLUME CF	AREA SF	VOLUME CF
TOP SLAB	53.0	17.7		
JOINT SEALER WRAP		LN. FT		LN. FT
CULVERT EXTERIOR		52.0		
EPOXY RESIN INJECTION		LN. FT		LN. FT
TOP SLAB		0.0		

VALUES IN CHART REPRESENT ESTIMATED REPAIR TOTALS AFTER REMOVAL OF UNSOUND CONCRETE, MIN. OF 1" BEHIND REBAR. SEE "TYPICAL REPAIR DETAIL", SHEET 4 OF 5.

PROJECT NO. I-0914BA

VANCE COUNTY

BRIDGE NO.: 113

SHEET 3 OF 5

NORTH CAROLINA PROFESSIONAL SEAL 14855 ENGINEER DOUGLAS R. CALHOUN

DocuSigned by: Douglas R. Calhoun
43019BF9D5E0429...
12/19/2014

STATE OF NORTH CAROLINA
DEPARTMENT OF TRANSPORTATION
RALEIGH

MODIFICATION AND REHABILITATION OF EXISTING VEHICULAR CULVERT

REVISIONS						SHEET NO.
NO.	BY:	DATE:	NO.	BY:	DATE:	CP-3
1			3			TOTAL SHEETS
2			4			5

DRAWN BY : S. WANCE DATE : 11/2014
CHECKED BY : D. R. CALHOUN DATE : 11/2014

19-DEC-2014 11:01
O:\Structures\Plans\Final Plans\I0914BA_SD_VehCuv113_CulvRepairs.dgn
kalford