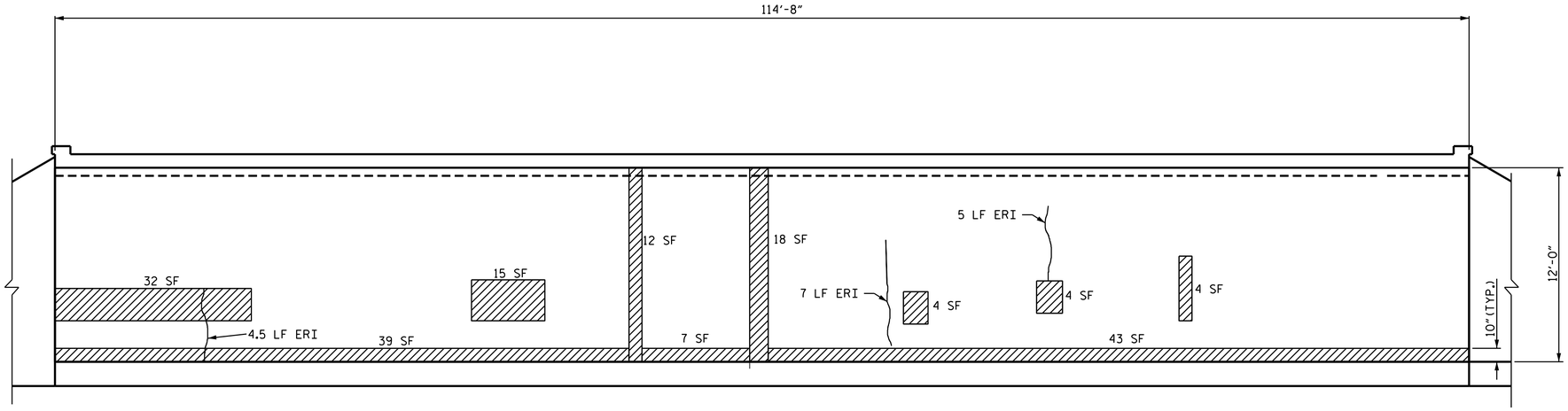

NORTH WALL ELEVATION

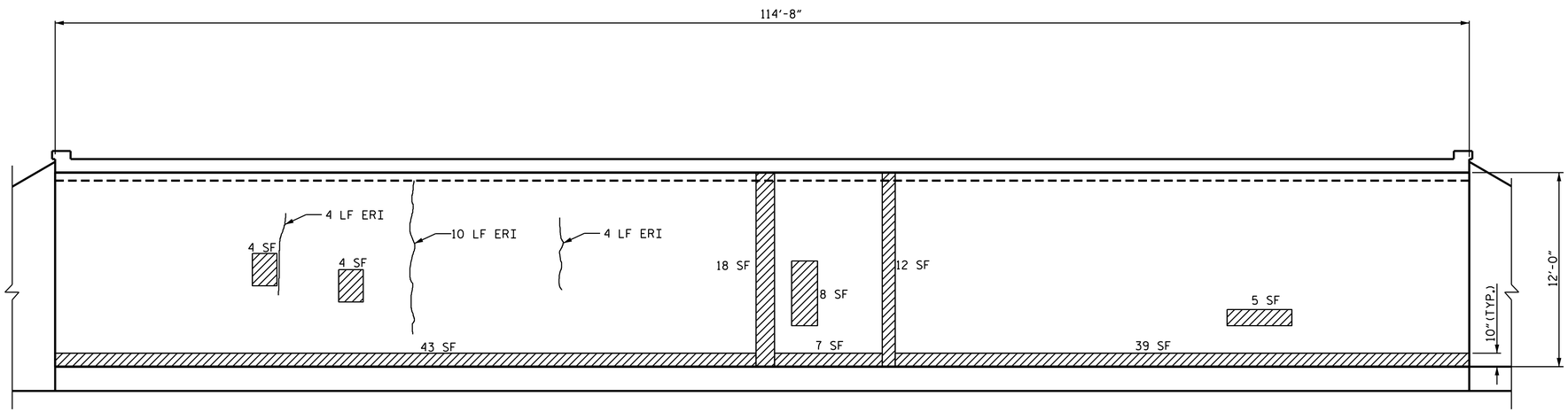

SOUTH WALL ELEVATION

NOTES:

REPAIR LOCATIONS AND ESTIMATE OF QUANTITIES ARE GIVEN WITH THE BEST INFORMATION AVAILABLE. IF ADDITIONAL REPAIRS NOT SHOWN ON THE DRAWINGS ARE DEEMED NECESSARY BY THE ENGINEER, THE ENGINEER SHALL NOTE ON THE DRAWINGS THE APPROXIMATE LOCATION AND DESCRIPTION OF THE REPAIRS AND ADJUST THE ACTUAL QUANTITIES ENTERED INTO THE REPAIR QUANTITY TABLE.

THE CONTRACTOR SHALL INSTALL A PLASTIC WATERSTOP FULL LENGTH ALONG THE WALL JOINT REPAIRS PRIOR TO PLACEMENT OF SHOTCRETE. THE COST OF THE PLASTIC WATERSTOP SHALL BE INCIDENTAL TO THE VARIOUS PAY ITEMS.

AFTER SHOTCRETE REPAIRS TO WALLS, EPOXY COATING SHALL BE APPLIED TO THE WALLS TO A HEIGHT OF 2'-0" ABOVE THE FLOOR SLAB.

SHOTCRETE REPAIR

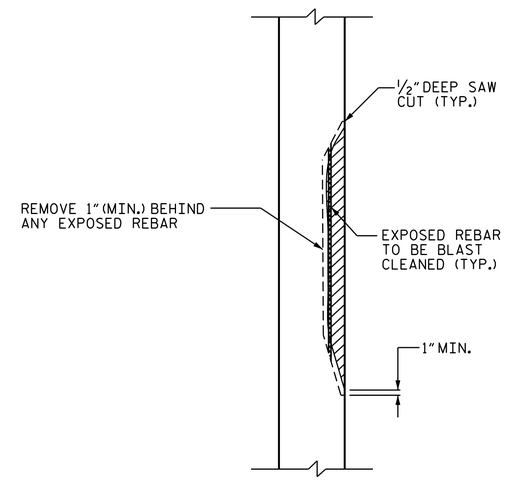

TYPICAL REPAIR DETAIL

WALL REPAIR QUANTITY TABLE

CULVERT REPAIRS	QUANTITIES			
	ESTIMATE		ACTUAL	
SHOTCRETE REPAIRS	AREA SF	VOLUME CF	AREA SF	VOLUME CF
CULVERT WALLS	318.0	106.0		
EPOXY RESIN INJECTION		LN. FT		LN. FT
CULVERT WALLS		34.5		
EPOXY COATING		AREA SF		AREA SF
CULVERT WALLS		459		

VALUES IN CHART REPRESENT ESTIMATED REPAIR TOTALS AFTER REMOVAL OF UNSOUND CONCRETE, MIN. OF 1" BEHIND REBAR. SEE "TYPICAL REPAIR DETAIL".

NORTH CAROLINA PROFESSIONAL SEAL 14855 ENGINEER DOUGLAS R. CALHOUN

DocuSigned by: Douglas R. Calhoun
430196F9D5ED429...
12/19/2014

PROJECT NO. I-0914BA
VANCE COUNTY
BRIDGE NO.: 113
SHEET 4 OF 5

STATE OF NORTH CAROLINA
DEPARTMENT OF TRANSPORTATION
RALEIGH

MODIFICATION AND REHABILITATION OF EXISTING VEHICULAR CULVERT

REVISIONS						SHEET NO.
NO.	BY:	DATE:	NO.	BY:	DATE:	CP-4
1			3			TOTAL SHEETS
2			4			5

DRAWN BY : S. WANCE DATE : 11/2014
CHECKED BY : D. R. CALHOUN DATE : 11/2014

19-DEC-2014 11:02
O:\Structures\Plans\Final Plans\I0914BA_SD_VehCuv113_CulvRepairs.dgn
kalford