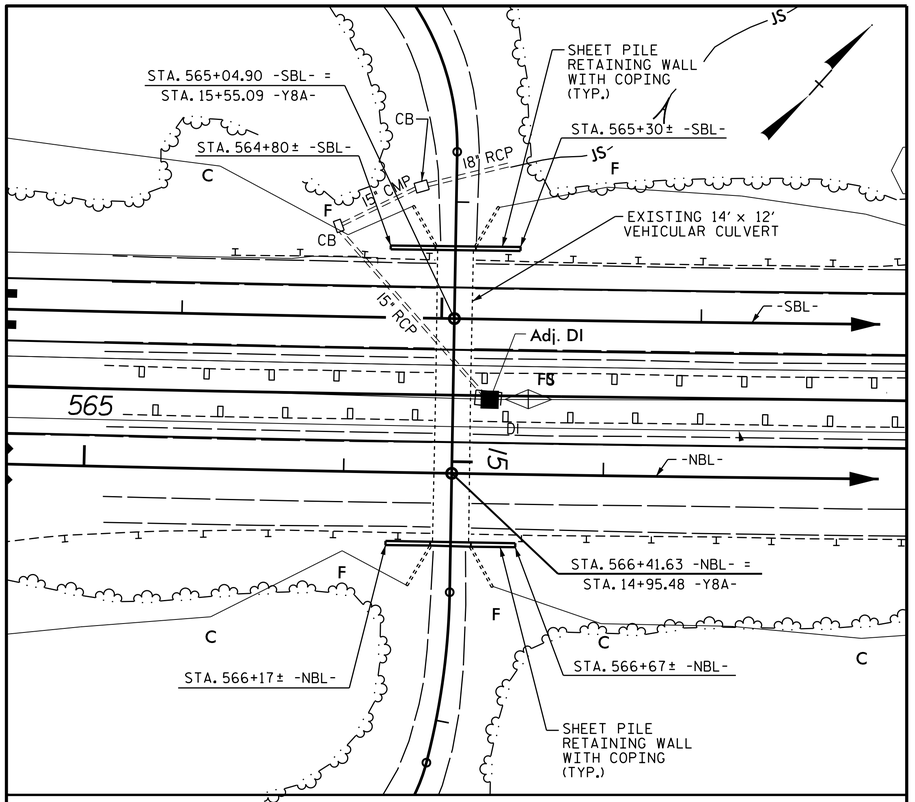

LOCATION SKETCH

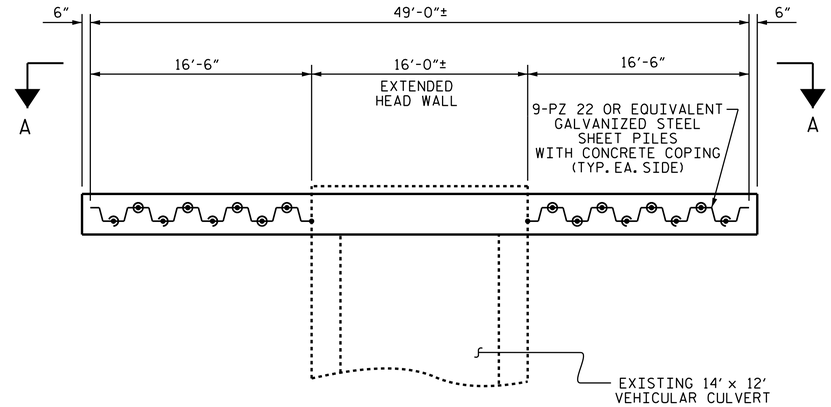

PLAN OF SHEET PILE RETAINING WALL

TYPICAL - BOTH ENDS OF VEHICULAR CULVERT

NOTES

FOR SHEET PILE RETAINING WALLS, SEE SECTION 452 OF THE STANDARD SPECIFICATIONS.

THE BOTTOM SLAB OF THE VEHICULAR CULVERT SHALL BE CLEANED AND PRESSURE WASHED AS DIRECTED BY THE ENGINEER PRIOR TO PERFORMING SHOTCRETE REPAIRS TO WALLS. PAYMENT FOR THIS WORK WILL BE INCLUDED IN THE VARIOUS PAY ITEMS.

FOR SHOTCRETE REPAIRS, SEE SPECIAL PROVISIONS.

FOR EPOXY RESIN INJECTION, SEE SPECIAL PROVISIONS.

FOR EPOXY COATING, SEE SPECIAL PROVISIONS.

FOR EXTERNAL JOINT SEALER WRAP, SEE SPECIAL PROVISIONS.

FOR CRANE SAFETY, SEE SPECIAL PROVISIONS.

FOR FALSEWORK AND FORMWORK, SEE SPECIAL PROVISIONS.

FOR GROUT FOR STRUCTURES, SEE SPECIAL PROVISIONS.

FOR SUBMITTAL OF WORKING DRAWINGS, SEE SPECIAL PROVISIONS.

FOR STEEL SHEET PILES, SEE SPECIAL PROVISIONS.

STEEL SHEET PILES SHALL BE GALVANIZED IN ACCORDANCE WITH SECTION 1076 OF THE STANDARD SPECIFICATIONS.

TOTAL STRUCTURE QUANTITIES

CLASS A CONCRETE	8.9 C.Y.
REINFORCING STEEL	1003 LBS.
SHEET PILE RETAINING WALLS	174 SQ. FT.
SHOTCRETE REPAIRS	136.4 CU. FT.
EPOXY RESIN INJECTION	42.5 LIN. FT.
JOINT SEALER WRAP	52.0 LIN. FT.
EPOXY COATING	459 SQ. FT.

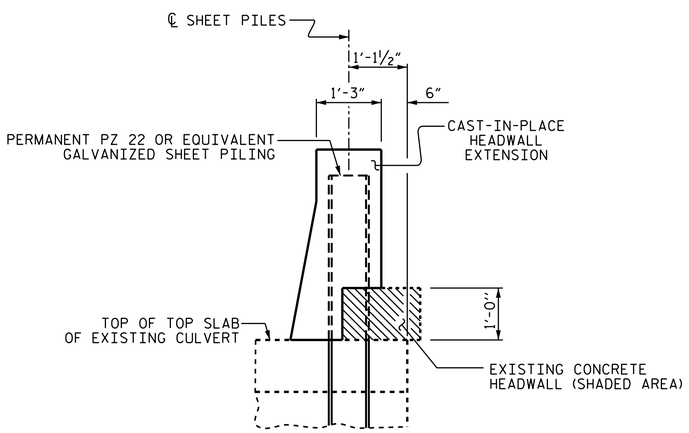

SECTION B-B

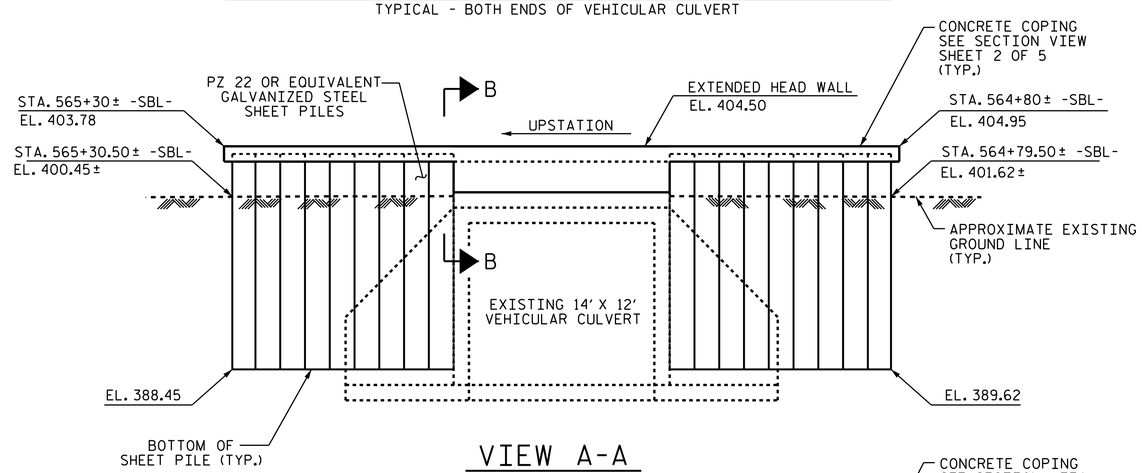

VIEW A-A

-SBL- END

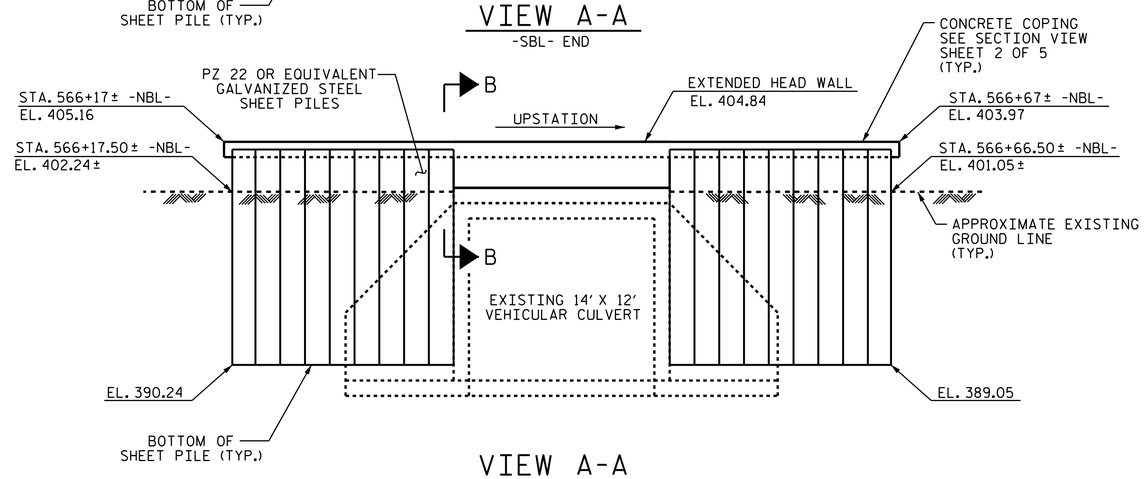

VIEW A-A

-NBL- END

SHEET PILE RETAINING WALL DETAILS

NORTH CAROLINA PROFESSIONAL SEAL 14855 ENGINEER DOUGLAS R. CALHOUN

DocuSigned by: Douglas R. Calhoun 430196F9D5E0429... 12/19/2014

PROJECT NO. I-0914BA

VANCE COUNTY

BRIDGE NO. 113

SHEET 1 OF 5

STATE OF NORTH CAROLINA
DEPARTMENT OF TRANSPORTATION
RALEIGH

MODIFICATION AND REHABILITATION OF EXISTING VEHICULAR CULVERT

REVISIONS						SHEET NO.
NO.	BY:	DATE:	NO.	BY:	DATE:	CP-1
1			3			TOTAL SHEETS
2			4			5

DRAWN BY : S. WANCE DATE : 10/17/14
CHECKED BY : D.R. CALHOUN DATE : 11/14

19-DEC-2014 11:00
Q:\Structures\Plans\FinalPlans\I0914AB_SD_VehCulv113_HdWlsnShor.dgn
kalford