GEOTECHNICAL ENGINEER

NORTH CAROLINA PROFESSIONAL SEAL 038176 ENGINEER SHIHAI ZHANG

DocuSigned by: Shihai Zhang 10/27/2014

245D67F41811435...

SIGNATURE DATE

ENGINEER

SIGNATURE DATE

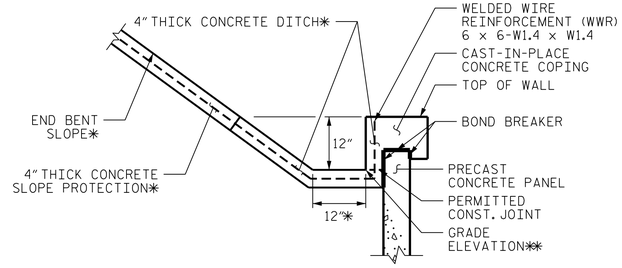

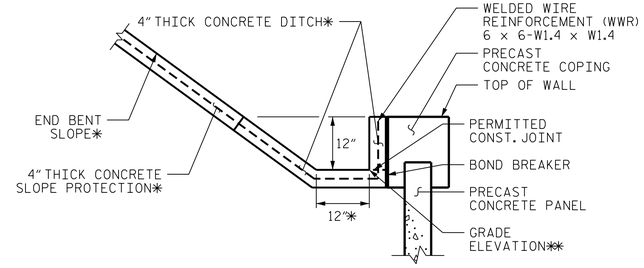

CONCRETE DITCH BEHIND WALL WITH CONCRETE SLOPE PROTECTION AND COPING STATION 20+45.73 TO 20+64.00 -Y2SBL-

✱SEE PLANS FOR END BENT SLOPE AND DITCH DETAILS.
✱✱SEE WALL ENVELOPE FOR GRADE ELEVATIONS.

FOR CONCRETE DITCHES, SEE SECTION 850 OF THE STANDARD SPECIFICATIONS.
FOR CONCRETE SLOPE PROTECTION, SEE SECTION 462 OF THE STANDARD SPECIFICATIONS.

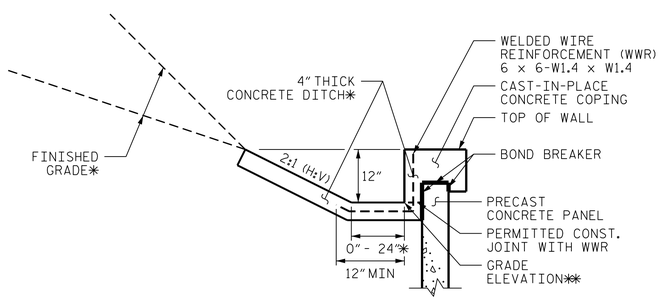

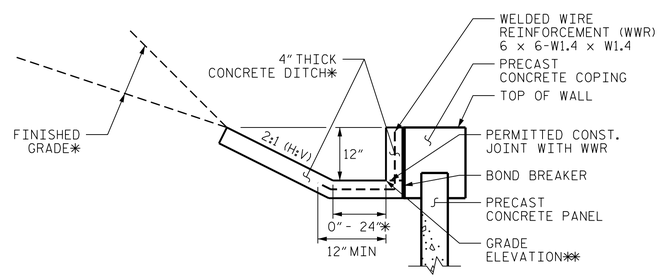

CONCRETE DITCH BEHIND WALL WITH CONCRETE COPING STATION 19+75.00 TO 20+45.73 -Y2SBL-

✱SEE ROADWAY PLANS FOR FINISHED GRADE AND DITCH DETAILS.
✱✱SEE WALL ENVELOPE FOR GRADE ELEVATIONS.

FOR CONCRETE DITCHES, SEE SECTION 850 OF THE STANDARD SPECIFICATIONS.

PROJECT NO.: I-0914BA

VANCE ***COUNTY***

STATION: 20+00.00 -Y2SBL-

SHEET 3 OF 3

GEOTECHNICAL ENGINEERING UNIT

☒ *EASTERN REGIONAL OFFICE*
☐ *WESTERN REGIONAL OFFICE*
☐ *CONTRACT OFFICE*

STATE OF NORTH CAROLINA DEPARTMENT OF TRANSPORTATION RALEIGH

MSE RETAINING WALL NO. 1
CONCRETE DITCH
BEHIND WALL DETAILS

REVISIONS							SHEET NO.
NO.	BY	DATE	NO.	BY	DATE		W-3
1			3				TOTAL SHEETS
2			4				3

PREPARED BY: S. ZHANG	DATE: 10/2014
REVIEWED BY: J. BATTS	DATE: 10/2014