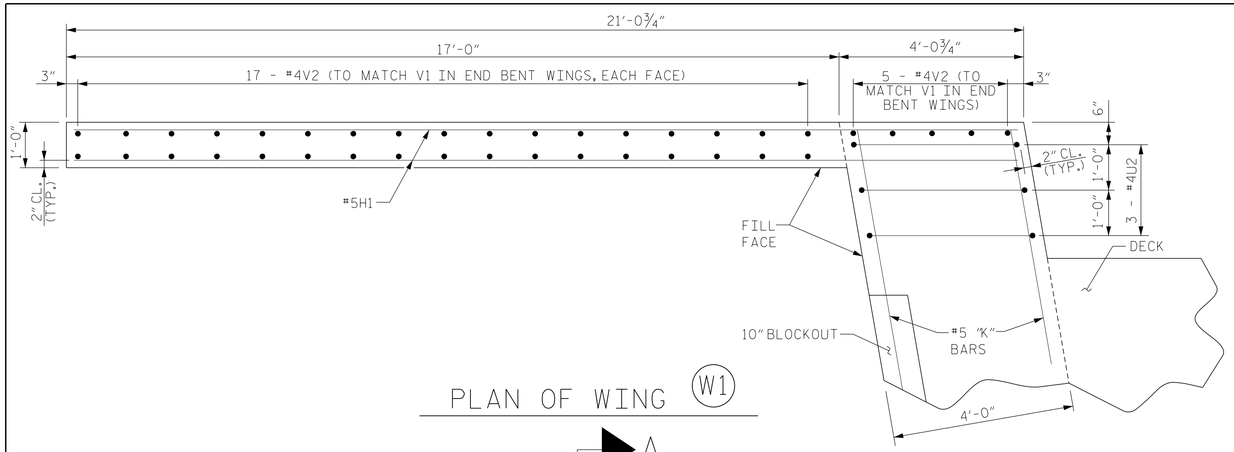

PLAN OF WING (W1)

A

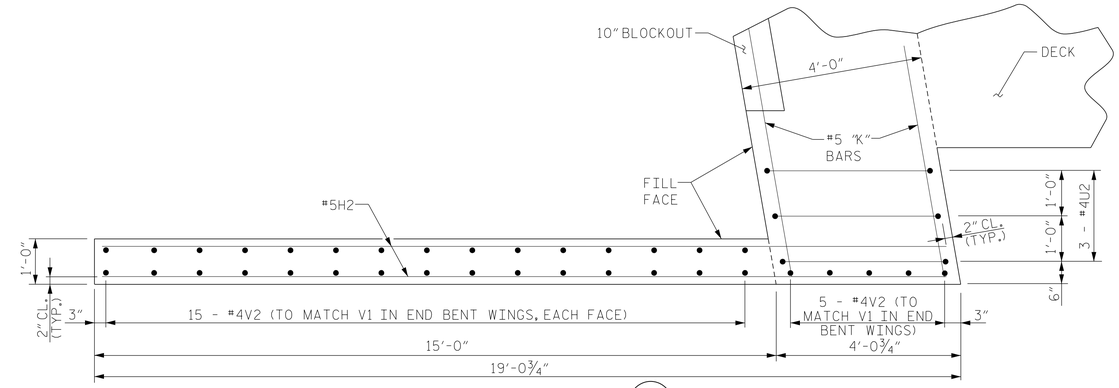

PLAN OF WING (W2)

B

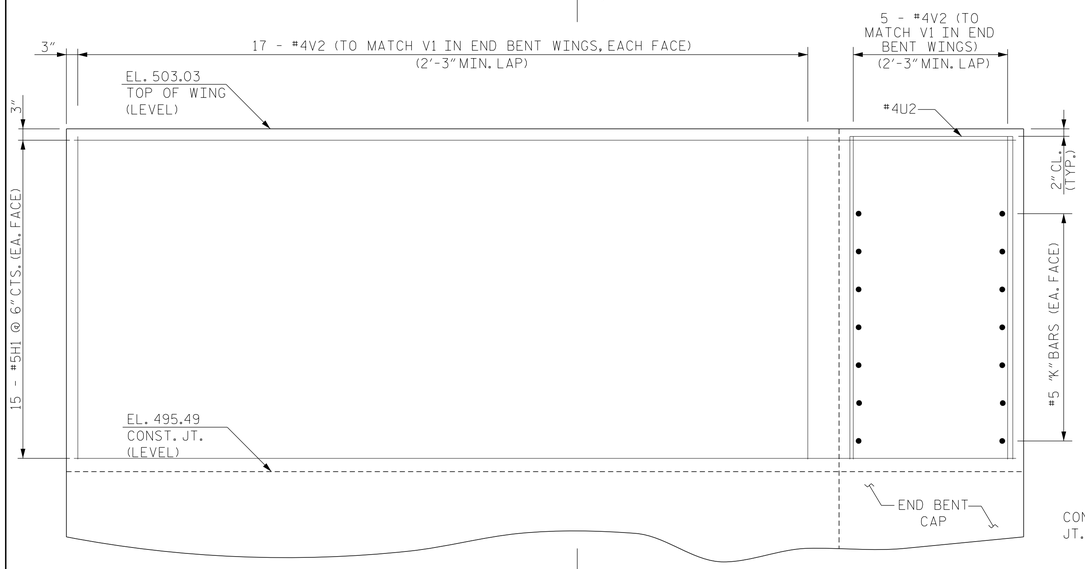

A

ELEVATION OF WING (W1)

FOR REINFORCING STEEL IN LOWER PORTION OF WING, SEE END BENT SHEETS

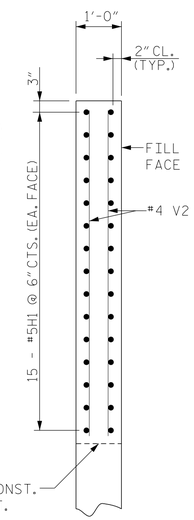

SECTION A-A

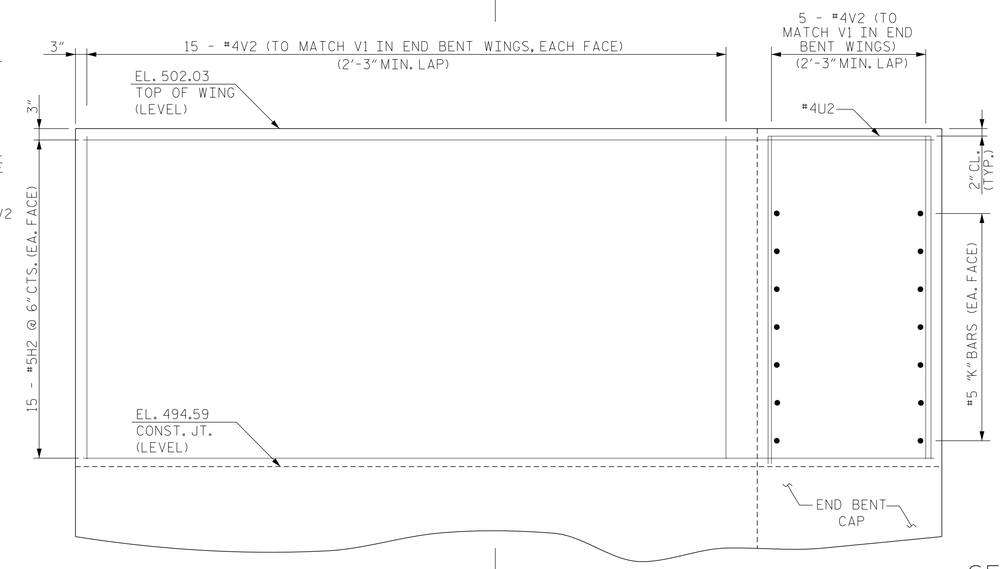

B

ELEVATION OF WING (W2)

FOR REINFORCING STEEL IN LOWER PORTION OF WING, SEE END BENT SHEETS

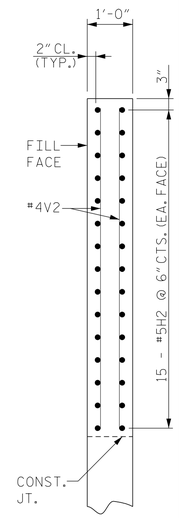

SECTION B-B

PROJECT NO. I-0914BA

VANCE COUNTY

STATION: 421+29.07 -NBL- POT
13+36.32 -Y7- POT

SHEET 3 OF 4

NORTH CAROLINA PROFESSIONAL SEAL 11725 ENGINEER DAVID R. RUGGLES

DocuSigned by: David Ruggles C462768DF412422... 11/14/2014

DWG. 9 OF 26

Firm License No. C-1051
421 Fayetteville St,
Suite 400
Raleigh, NC 27601
T 919.380.8750
www.stewartinc.com
STEWART

STATE OF NORTH CAROLINA
DEPARTMENT OF TRANSPORTATION
RALEIGH

SUPERSTRUCTURE
PLAN OF SPAN
DETAILS

REVISIONS						SHEET NO.
NO.	BY:	DATE:	NO.	BY:	DATE:	S-160
1			3			TOTAL SHEETS
2			4			177

DRAWN BY: J. LOFTUS	DATE : 05/14	
CHECKED BY: D. RUGGLES	DATE : 05/14	
DESIGN ENGINEER OF RECORD: D. RUGGLES	DATE : 04/14	

SITE IV (-NBL-)