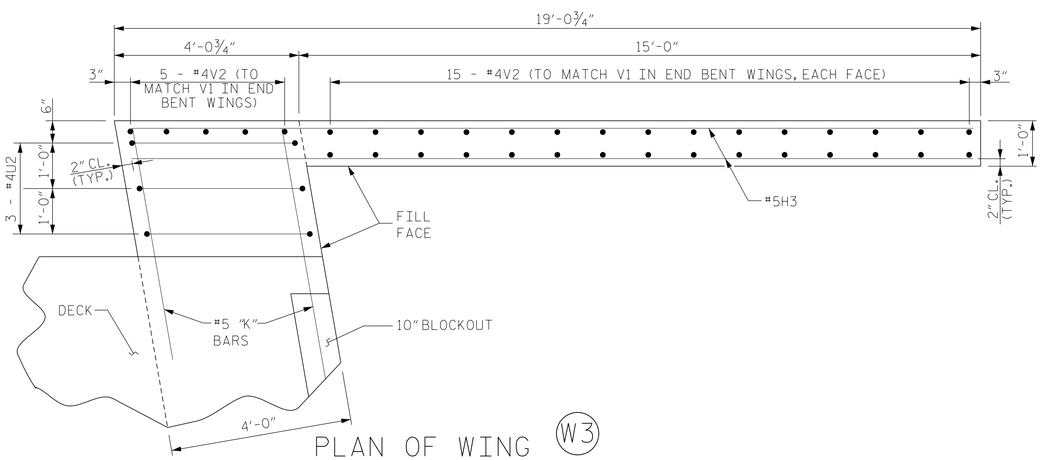

PLAN OF WING (W3)

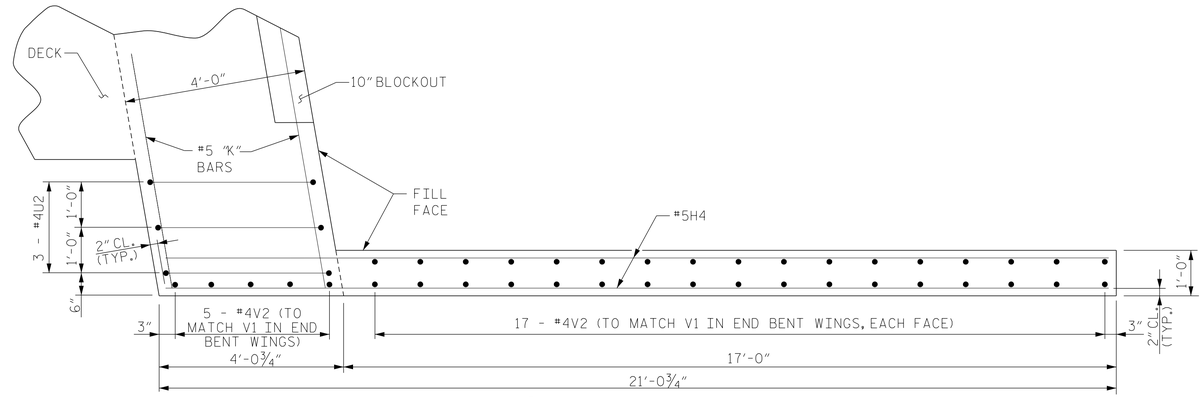

PLAN OF WING (W4)

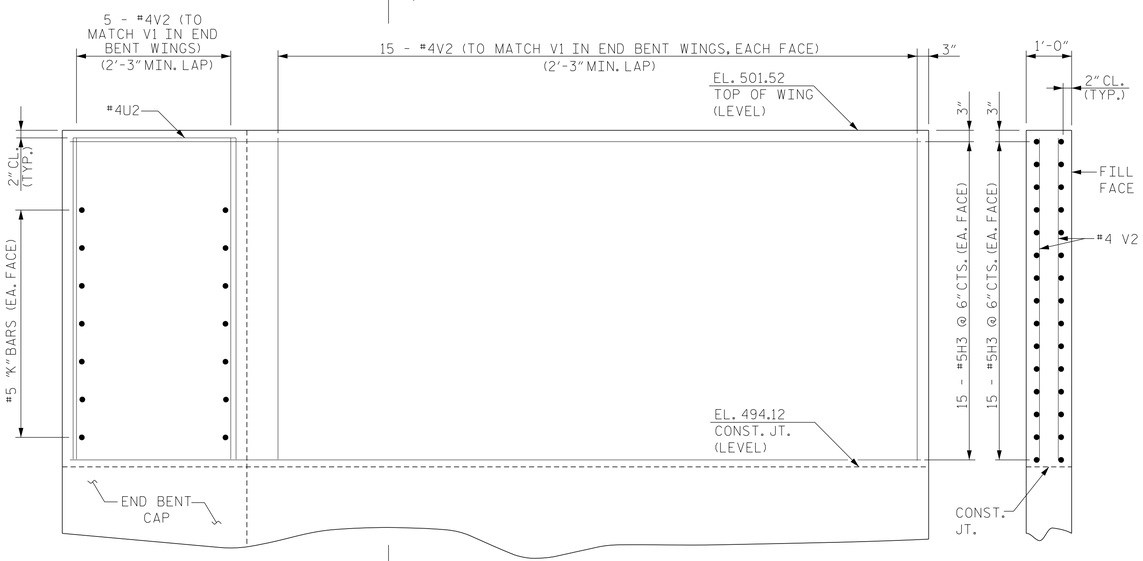

ELEVATION OF WING (W3)

FOR REINFORCING STEEL IN LOWER PORTION OF WING, SEE END BENT SHEETS

SECTION C-C

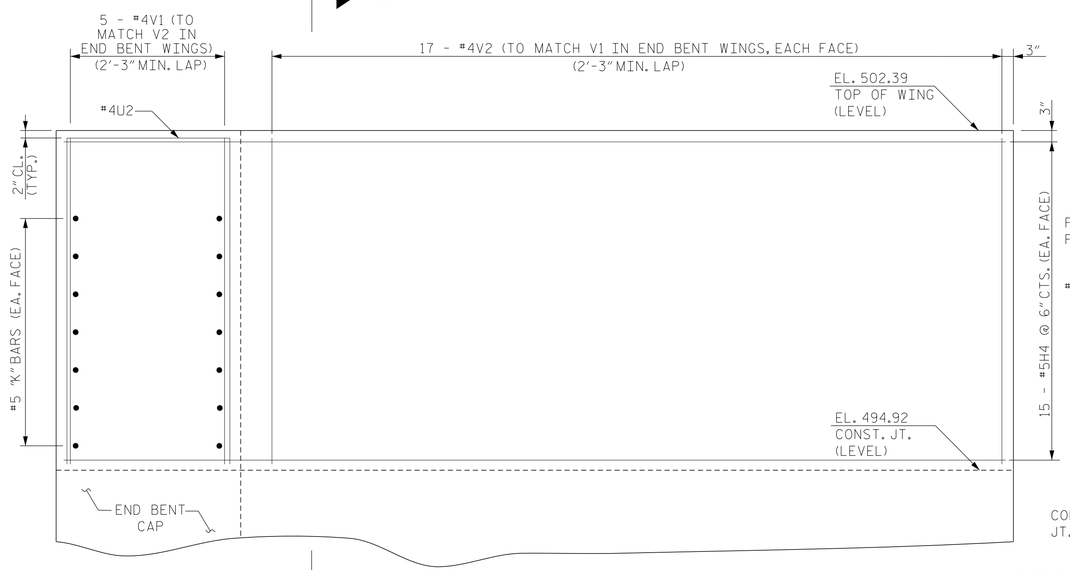

ELEVATION OF WING (W4)

FOR REINFORCING STEEL IN LOWER PORTION OF WING, SEE END BENT SHEETS

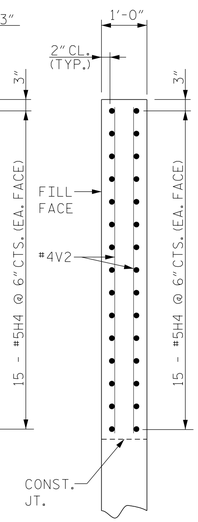

SECTION D-D

PROJECT NO. I-0914BA

VANCE COUNTY

STATION: 419+67.07 -SBL- POT
13+96.65 -Y7- POT

SHEET 4 OF 4

NORTH CAROLINA PROFESSIONAL SEAL 11725 ENGINEER DAVID R. RUGGLES

DocuSigned by: David Ruggles C462F680F412422... 11/14/2014

DWG. 10 OF 26

STEWART

Firm License No. C-1051
421 Fayetteville St,
Suite 400
Raleigh, NC 27601
T 919.380.8750
www.stewartinc.com

STATE OF NORTH CAROLINA
DEPARTMENT OF TRANSPORTATION
RALEIGH

SUPERSTRUCTURE
PLAN OF SPAN
DETAILS

REVISIONS						SHEET NO.
NO.	BY:	DATE:	NO.	BY:	DATE:	S-135
1			3			TOTAL SHEETS
2			4			177

DRAWN BY: J. LOFTUS	DATE : 05/14	
CHECKED BY: D. RUGGLES	DATE : 05/14	
DESIGN ENGINEER OF RECORD: D. RUGGLES	DATE : 04/14	

SITE IV (-SBL-)