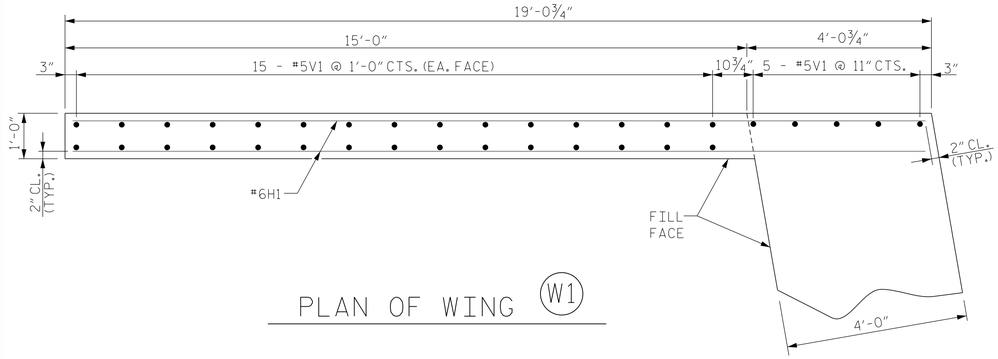

PLAN OF WING (W1)

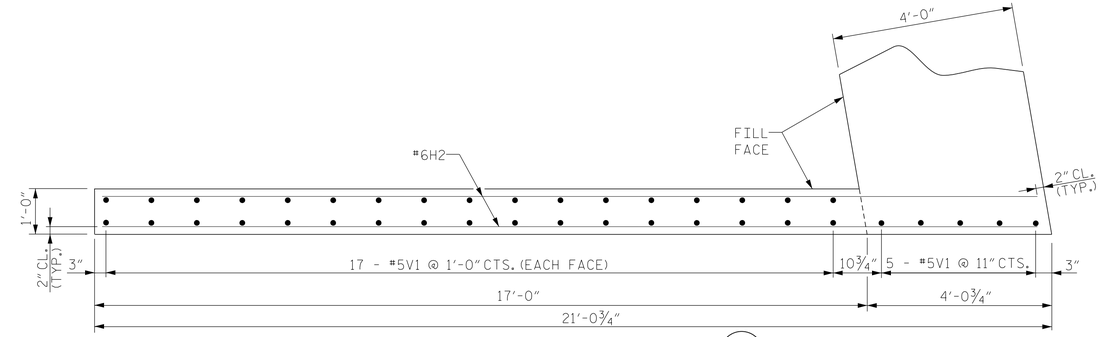

PLAN OF WING (W2)

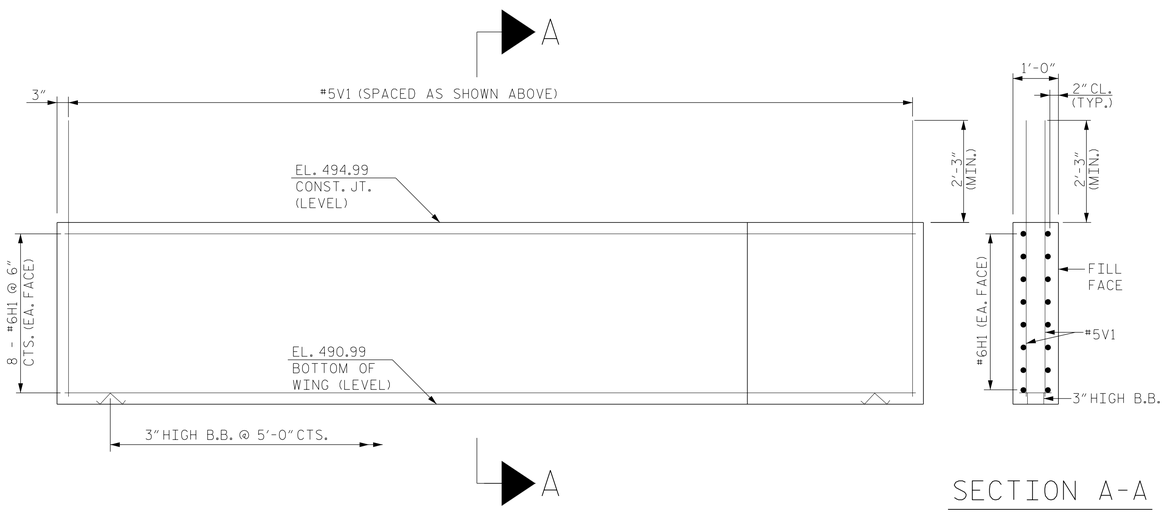

SECTION A-A

ELEVATION OF WING (W1)

FOR REINFORCING STEEL IN UPPER PORTION OF WING, SEE SUPERSTRUCTURE SHEETS

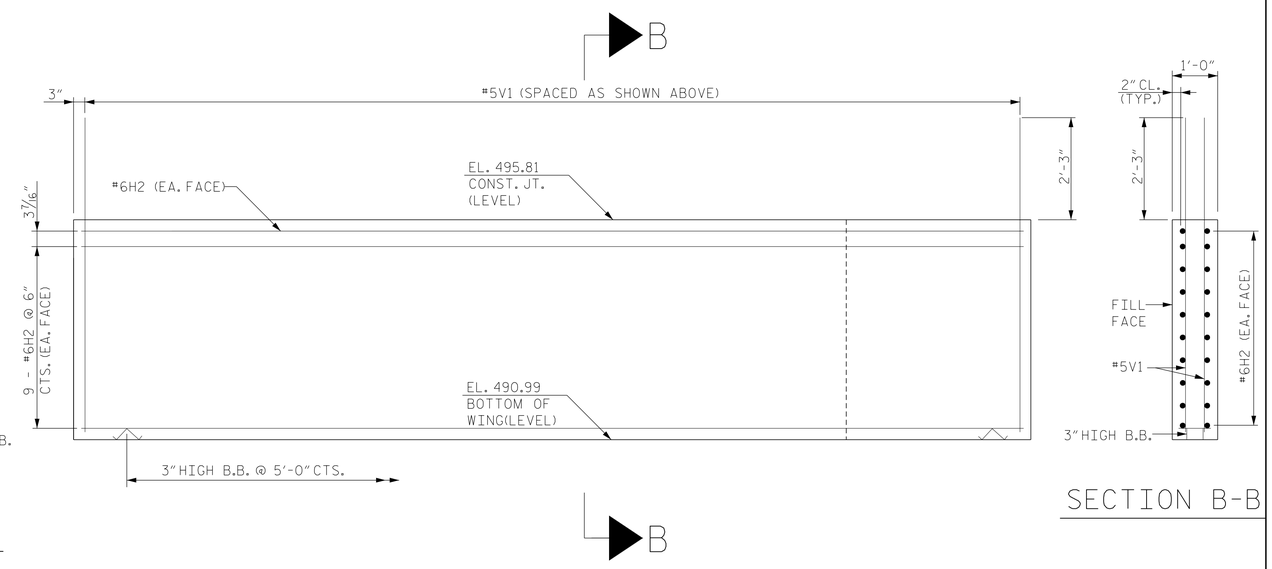

SECTION B-B

ELEVATION OF WING (W2)

FOR REINFORCING STEEL IN UPPER PORTION OF WING, SEE SUPERSTRUCTURE SHEETS

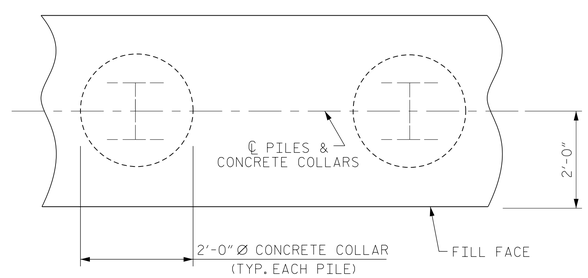

PLAN

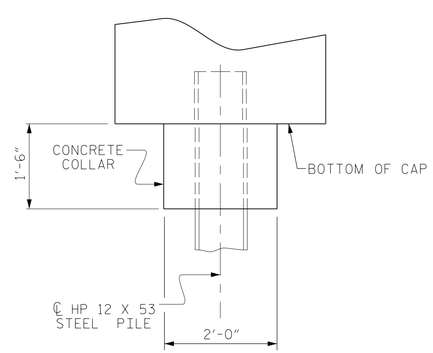

ELEVATION

CORROSION PROTECTION FOR STEEL PILES DETAIL

(END BENT No. 1 SHOWN, END BENT No. 2 SIMILAR BY ROTATION)

PROJECT NO. I-0914BA

VANCE COUNTY

STATION: 419+67.07 -SBL- POT
13+96.65 -Y7- POT

SHEET 2 OF 5

STATE OF NORTH CAROLINA
DEPARTMENT OF TRANSPORTATION
RALEIGH

SUBSTRUCTURE
INTEGRAL END BENT NO.1
DETAILS

NORTH CAROLINA PROFESSIONAL SEAL 11725 ENGINEER DAVID R. RUGGLES

DocuSigned by: David Ruggles 11/14/2014
C462768DF412422...

DWG. 20 OF 26

STEWART

Firm License No. C-1051
421 Fayetteville St,
Suite 400
Raleigh, NC 27601
T 919.380.8750
www.stewartinc.com

REVISIONS						SHEET NO.
NO.	BY:	DATE:	NO.	BY:	DATE:	S-145
1			3			TOTAL SHEETS
2			4			177

DRAWN BY: J. LOFTUS	DATE : 05/14
CHECKED BY: D. RUGGLES	DATE : 05/14
DESIGN ENGINEER OF RECORD: D. RUGGLES	DATE : 04/14

SITE IV (-SBL-)