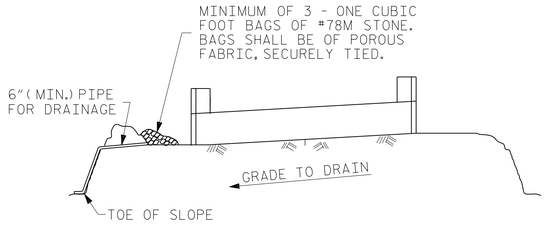

BAGGED STONE AND PIPE SHALL BE PLACED IMMEDIATELY AFTER COMPLETION OF END BENT EXCAVATION. PIPE MAY BE EITHER CONCRETE, CORRUGATED STEEL, CORRUGATED ALUMINUM ALLOY, OR CORRUGATED PLASTIC. PERFORATED PIPE WILL NOT BE ALLOWED.

BAGGED STONE SHALL REMAIN IN PLACE UNTIL THE ENGINEER DIRECTS THAT IT BE REMOVED. THE CONTRACTOR SHALL REMOVE AND DISPOSE OF SILT ACCUMULATIONS AT BAGGED STONE WHEN SO DIRECTED BY THE ENGINEER. BAGS SHALL BE REMOVED AND REPLACED WHENEVER THE ENGINEER DETERMINES THAT THEY HAVE DETERIORATED AND LOST THEIR EFFECTIVENESS.

NO SEPARATE PAYMENT WILL BE MADE FOR THIS WORK AND THE ENTIRE COST OF THIS WORK SHALL BE INCLUDED IN THE UNIT CONTRACT PRICE BID FOR THE SEVERAL PAY ITEMS.

TEMPORARY DRAINAGE AT END BENT

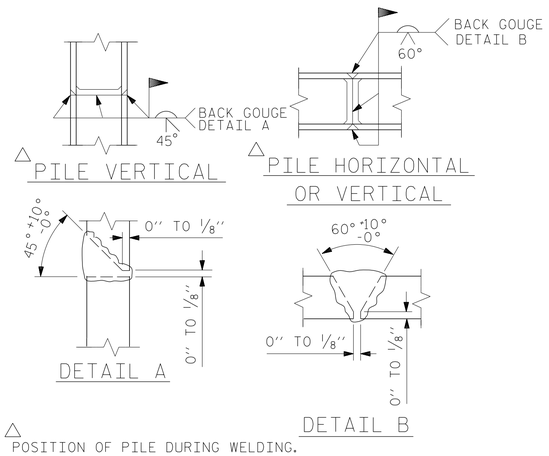

△ POSITION OF PILE DURING WELDING.

PILE SPLICE DETAILS

BAR TYPES

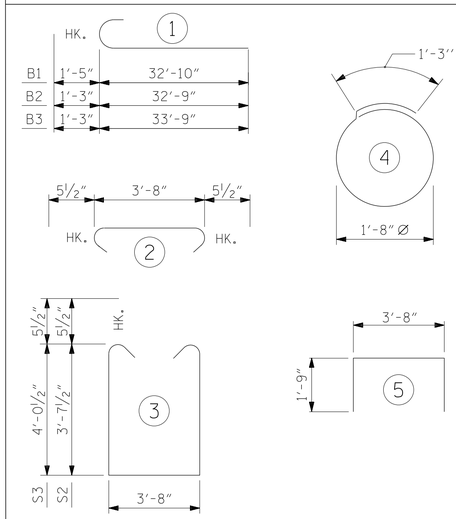

ALL BAR DIMENSIONS ARE OUT TO OUT.

END BENT No. 1	END BENT No. 2
HP 12 X 53 STEEL PILES	HP 12 X 53 STEEL PILES
NO: 10 LIN. FT.= 475	NO: 10 LIN. FT.= 350

BILL OF MATERIAL FOR ONE END BENT

	BAR	NO.	SIZE	TYPE	LENGTH	WEIGHT
	B1	8	#10	1	34'-3"	1179
	B2	5	#9	1	34'-0"	578
	B3	5	#9	1	35'-0"	595
	B4	5	#4	STR	12'-0"	40
	B5	20	#5	STR	30'-5"	634
	B6	12	#4	STR	20'-11"	168
	B7	18	#4	STR	3'-8"	44
END BENT 1	H1	16	#6	STR	18'-9"	451
END BENT 1	H2	20	#6	STR	20'-7"	618
END BENT 2	H3	16	#6	STR	18'-7"	447
END BENT 2	H4	20	#6	STR	20'-9"	623
	S1	67	#5	2	4'-7"	320
	S2	27	#5	3	11'-10"	333
	S3	40	#5	3	12'-8"	528
	S4	40	#4	4	6'-6"	174
	U1	12	#4	5	7'-2"	57
	V1	158	#5	STR	7'-0"	1154

REINFORCING STEEL
FOR END BENT No. 1 6873 LBS.
FOR END BENT No. 2 6874 LBS.

CLASS A CONCRETE BREAKDOWN
CAP, LOWER PART OF WINGS & COLLARS
FOR END BENT No. 1 45.1 C.Y.
FOR END BENT No. 2 44.9 C.Y.

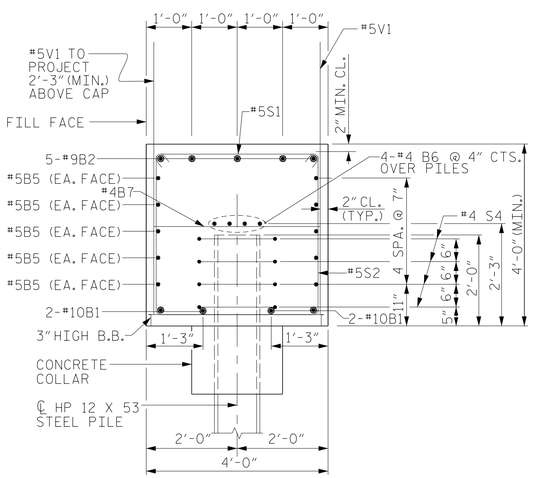

SECTION Z-Z

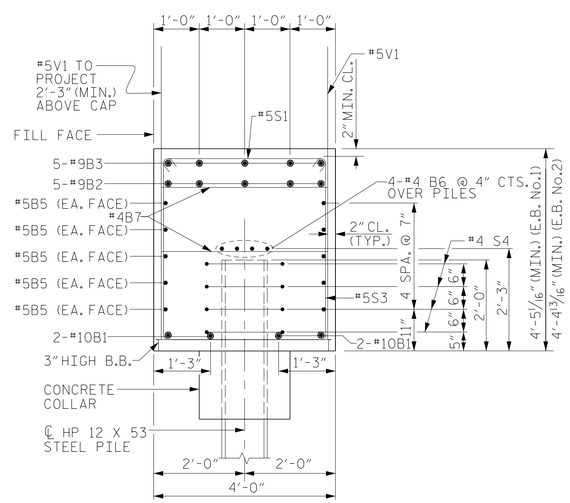

SECTION Y-Y

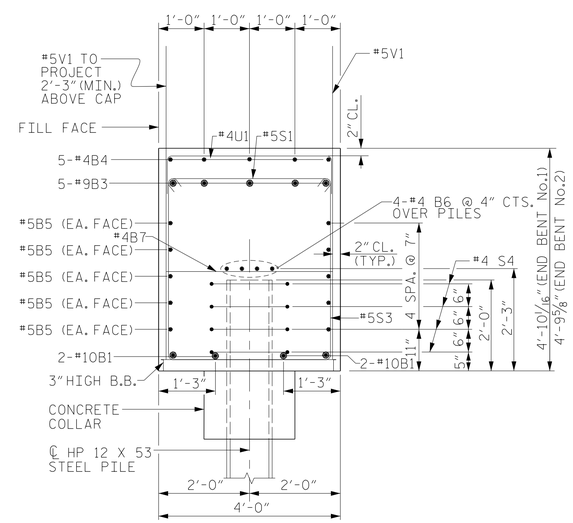

SECTION X-X

PROJECT NO. I-0914BA
VANCE COUNTY
STATION: 419+67.07 -SBL- POT
13+96.65 -Y7- POT

SHEET 5 OF 5

NORTH CAROLINA PROFESSIONAL SEAL 11725 ENGINEER DAVID R. RUGGLES

DocuSigned by: David Ruggles C462768DF412422... 11/14/2014

DWG. 23 OF 26

STEWART
Firm License No. C-1051
421 Fayetteville St,
Suite 400
Raleigh, NC 27601
T 919.380.8750
www.stewartinc.com

STATE OF NORTH CAROLINA
DEPARTMENT OF TRANSPORTATION
RALEIGH

SUBSTRUCTURE
INTEGRAL END BENTS No. 1 & 2
DETAILS

REVISIONS						
NO.	BY:	DATE:	NO.	BY:	DATE:	
1			3			
2			4			

SHEET NO. S-148
TOTAL SHEETS 177

DRAWN BY:	J. LOFTUS	DATE :	05/14
CHECKED BY:	D. RUGGLES	DATE :	05/14
DESIGN ENGINEER OF RECORD:	D. RUGGLES	DATE :	04/14

SITE IV (-SBL-)