NOTES

THE ELASTOMER IN THE STEEL REINFORCED BEARINGS SHALL HAVE A SHEAR MODULUS OF 0.160 KSI, IN ACCORDANCE WITH AASHTO M251.

FOR STEEL REINFORCED ELASTOMERIC BEARINGS, SEE SPECIAL PROVISIONS.

MAXIMUM ALLOWABLE SERVICE LOADS	
D.L.+L.L. (NO IMPACT)	
TYPE V	365 k

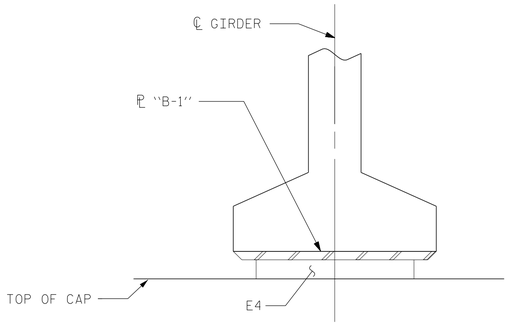

SECTION E-E

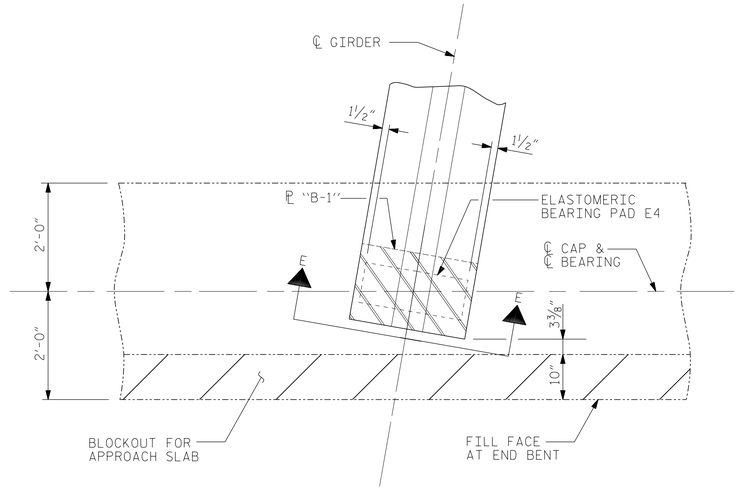

TYPICAL PLAN AT END BENT

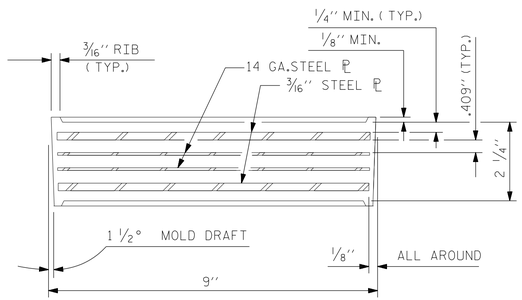

TYPICAL SECTION OF ELASTOMERIC BEARINGS

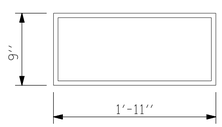

E4 (10 REQ'D)

PLAN VIEW OF ELASTOMERIC BEARING

TYPE V

PROJECT NO. I-0914BA

VANCE COUNTY

STATION: 421+29.07 -NBL- POT
13+36.32 -Y7- POT

SHEET 1 OF 1

NORTH CAROLINA PROFESSIONAL SEAL 11725 ENGINEER DAVID R. RUGGLES

DocuSigned by: David Ruggles 11/14/2014
C402760DF412422

DWG. 15 OF 26

STATE OF NORTH CAROLINA
DEPARTMENT OF TRANSPORTATION
RALEIGH

STANDARD

ELASTOMERIC BEARING DETAILS

PRESTRESSED CONCRETE GIRDER SUPERSTRUCTURE

STEWART
Firm License No. C-1051
421 Fayetteville St,
Suite 400
Raleigh, NC 27601
T 919.380.8750
www.stewartinc.com

REVISIONS							
NO.	BY:	DATE:	NO.	BY:	DATE:	SHEET NO.	S-166
1			3			TOTAL SHEETS	177
2			4				

DRAWN BY:	J. LOFTUS	DATE :	05/14
CHECKED BY:	D. RUGGLES	DATE :	05/14
DESIGN ENGINEER OF RECORD:	D. RUGGLES	DATE :	04/14

STANDARD AT 1 1/2" SCALE

STD. NO. EB4 (SHT 2)

SITE IV (-NBL-)