NOTES

THE ELASTOMER IN THE STEEL REINFORCED BEARINGS SHALL HAVE A SHEAR MODULUS OF 0.160 KSI, IN ACCORDANCE WITH AASHTO M251.

FOR STEEL REINFORCED ELASTOMERIC BEARINGS, SEE SPECIAL PROVISIONS.

MAXIMUM ALLOWABLE SERVICE LOADS	
D.L.+L.L. (NO IMPACT)	
TYPE V	365 k

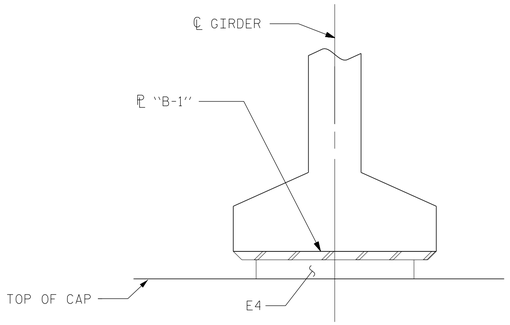

SECTION E-E

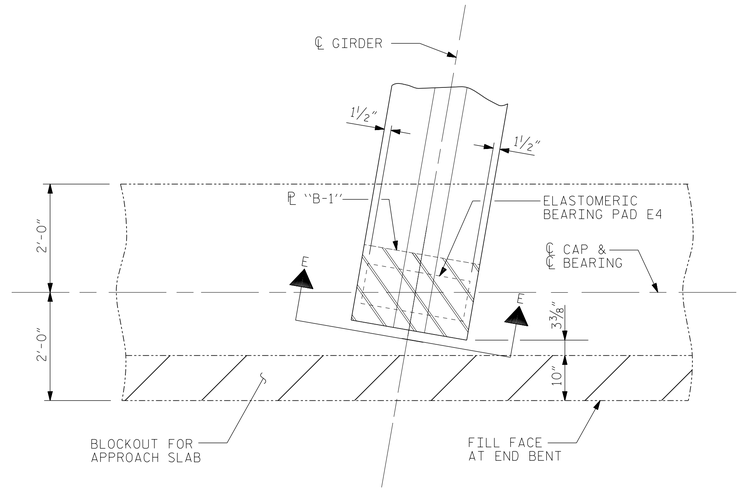

TYPICAL PLAN AT END BENT

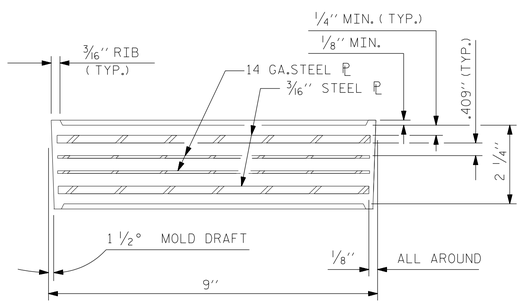

TYPICAL SECTION OF ELASTOMERIC BEARINGS

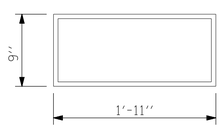

E4 (10 REQ'D)

PLAN VIEW OF ELASTOMERIC BEARING

TYPE V

PROJECT NO. I-0914BA

VANCE COUNTY

STATION: 419+67.07 -SBL- POT
13+96.65 -Y7- POT

SHEET 1 OF 1

NORTH CAROLINA PROFESSIONAL SEAL 11725 ENGINEER DAVID R. RUGGLES

DocuSigned by: David Ruggles 11/14/2014
C462768DF412422

DWG. 15 OF 26

Firm License No. C-1051
421 Fayetteville St,
Suite 400
Raleigh, NC 27601
T 919.380.8750
www.stewartinc.com
STEWART

STATE OF NORTH CAROLINA
DEPARTMENT OF TRANSPORTATION
RALEIGH

ELASTOMERIC BEARING DETAILS

PRESTRESSED CONCRETE GIRDER SUPERSTRUCTURE

REVISIONS						
NO.	BY:	DATE:	NO.	BY:	DATE:	
1			3			
2			4			

SHEET NO. S-140

TOTAL SHEETS 177

DRAWN BY: J. LOFTUS	DATE : 05/14	
CHECKED BY: D. RUGGLES	DATE : 05/14	
DESIGN ENGINEER OF RECORD: D. RUGGLES	DATE : 04/14	

SITE IV (-SBL-)