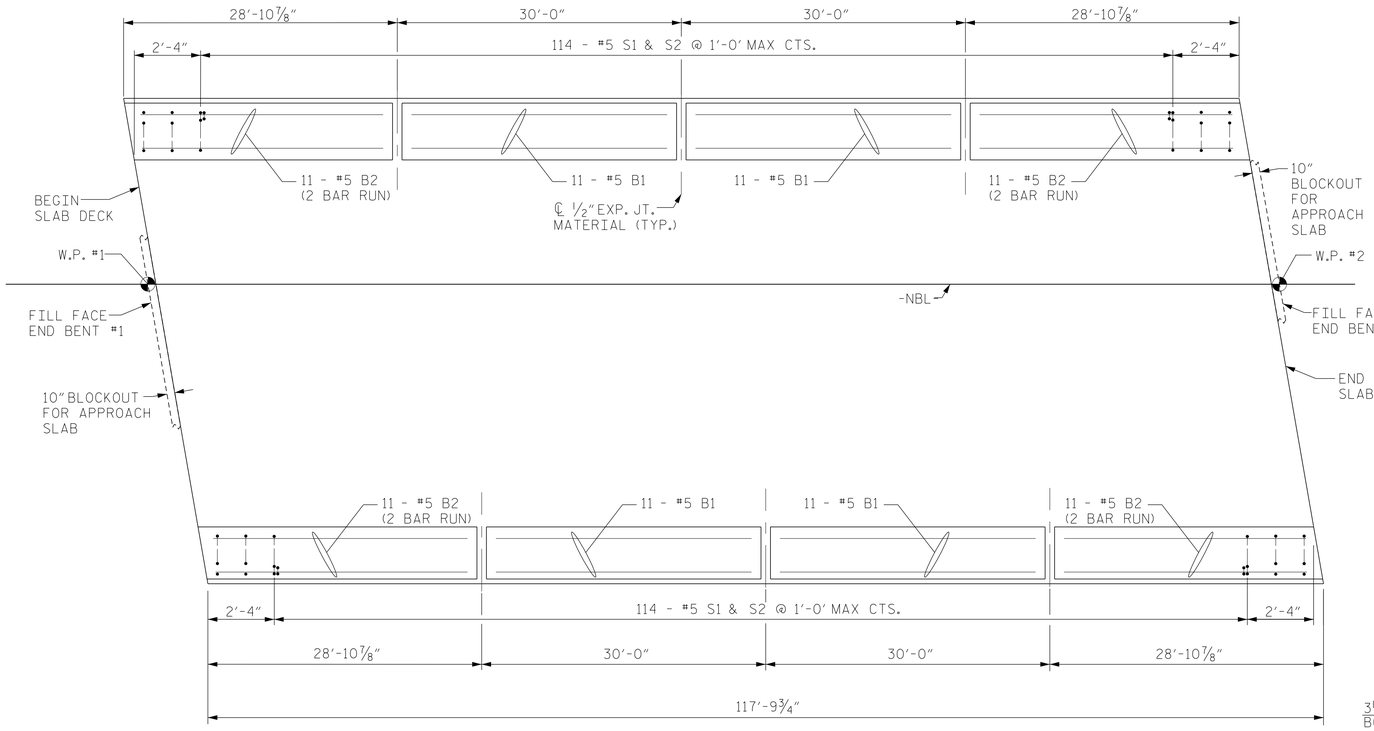

PLAN OF BARRIER RAIL

FOR "S" BARS @ END OF RAIL, SEE "END OF RAIL DETAILS"

NOTES

THE BARRIER RAIL IN EACH SPAN SHALL NOT BE CAST UNTIL ALL SLAB CONCRETE IN THAT SPAN HAS BEEN CAST AND HAS REACHED A MINIMUM COMPRESSIVE STRENGTH OF 3,000 PSI.

ALL REINFORCING STEEL IN BARRIER RAILS SHALL BE EPOXY COATED.

GROOVED CONTRACTION JOINTS, ½" IN DEPTH, SHALL BE TOOLED IN ALL EXPOSED FACES OF THE BARRIER RAIL AND IN ACCORDANCE WITH ARTICLE 825-10(B) OF THE STANDARD SPECIFICATIONS. THE CONTRACTION JOINT SHALL BE LOCATED AT EACH THIRD POINT BETWEEN BARRIER RAIL EXPANSION JOINTS. ONLY ONE CONTRACTION JOINT IS REQUIRED AT MIDPOINT OF BARRIER RAIL SEGMENTS LESS THAN 20 FEET IN LENGTH AND NO CONTRACTION JOINTS ARE REQUIRED FOR THOSE SEGMENTS LESS THAN 10 FEET IN LENGTH.

THE #5 "S" BARS MAY BE SHIFTED AS NECESSARY IN ORDER TO MAINTAIN 2" MIN. CLEAR TO THE ½" EXPANSION JOINT MATERIAL IN THE BARRIER RAIL.

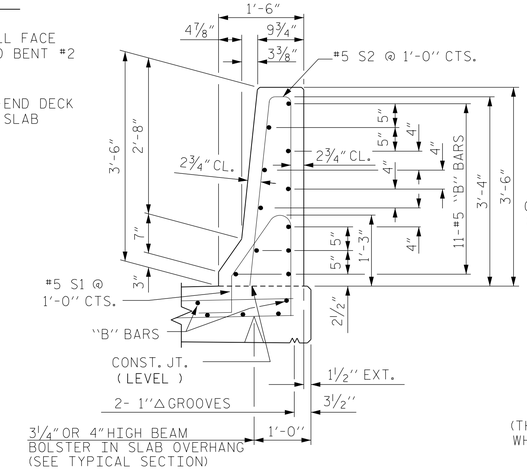

SECTION THRU RAIL

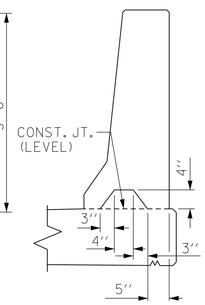

SECTION S-S

AT DAM IN OPEN JOINT
(THIS IS TO BE USED ONLY WHEN SLIP FORM IS USED)

BAR TYPES

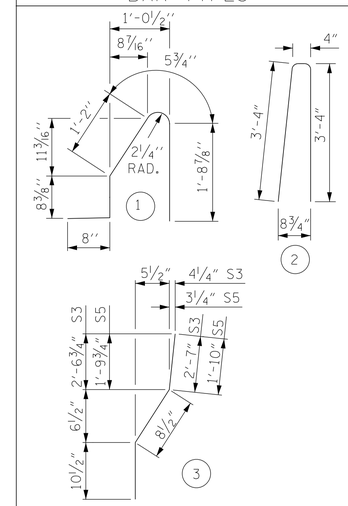

ALL BAR DIMENSIONS ARE OUT TO OUT

BILL OF MATERIAL

FOR CONCRETE BARRIER RAIL ONLY

BAR	NO.	SIZE	TYPE	LENGTH	WEIGHT
* S1	228	#5	1	4'-9"	1130
* S2	228	#5	2	7'-0"	1665
* S5	8	#5	3	3'-5"	29
* S6	8	#5	STR	3'-3"	27
* B1	44	#5	STR	29'-7"	1358
* B2	88	#5	STR	16'-1"	1476

* EPOXY COATED REINFORCING STEEL	5685	LBS.
CLASS AA CONCRETE	32.0	CU. YDS.
CONCRETE BARRIER RAIL	235.62	LIN. FT.

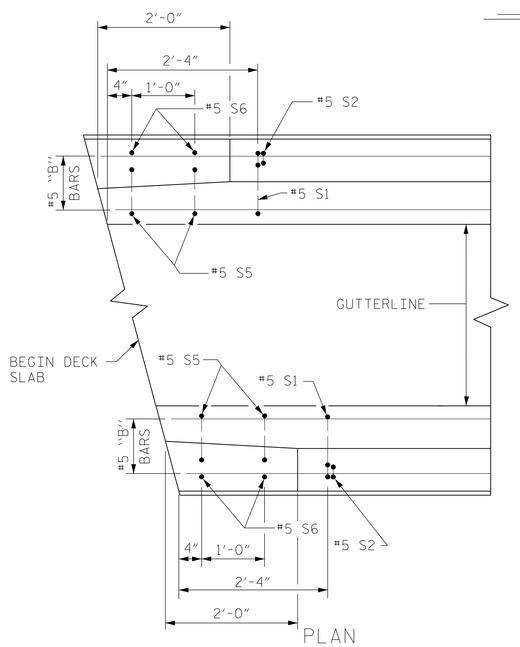

PLAN

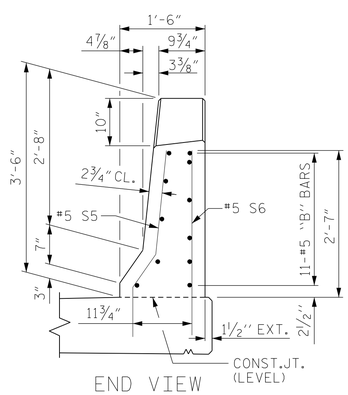

END VIEW

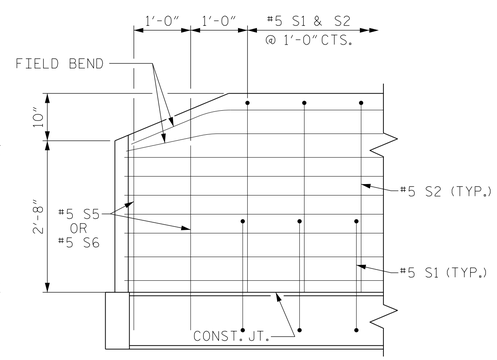

SIDE VIEW

END OF RAIL DETAILS

FOR ADHESIVE ANCHORING AT END BENTS

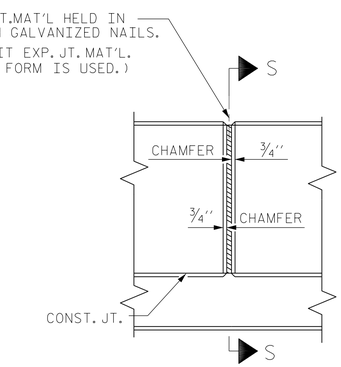

ELEVATION AT EXPANSION JOINTS

BARRIER RAIL DETAILS

PROJECT NO. I-0914BA

VANCE COUNTY

STATION: 421+29.07 -NBL- POT
13+36.32 -Y7- POT

SHEET 1 OF 1

NORTH CAROLINA PROFESSIONAL SEAL 11725 ENGINEER DAVID R. RUGGLES

DocuSigned by: David Ruggles C462768DF412422... 11/14/2014

DWG. 16 OF 26

STEWART

Firm License No. C-1051
421 Fayetteville St,
Suite 400
Raleigh, NC 27601
T 919.380.8750
www.stewartinc.com

STATE OF NORTH CAROLINA
DEPARTMENT OF TRANSPORTATION
RALEIGH

STANDARD

CONCRETE BARRIER RAIL

REVISIONS						SHEET NO.
NO.	BY:	DATE:	NO.	BY:	DATE:	S-167
1			3			TOTAL SHEETS
2			4			177

DRAWN BY:	J. LOFTUS	DATE :	05/14
CHECKED BY:	D. RUGGLES	DATE :	05/14
DESIGN ENGINEER OF RECORD:	D. RUGGLES	DATE :	04/14

STD. NO. CBR1

SITE IV (-NBL-)