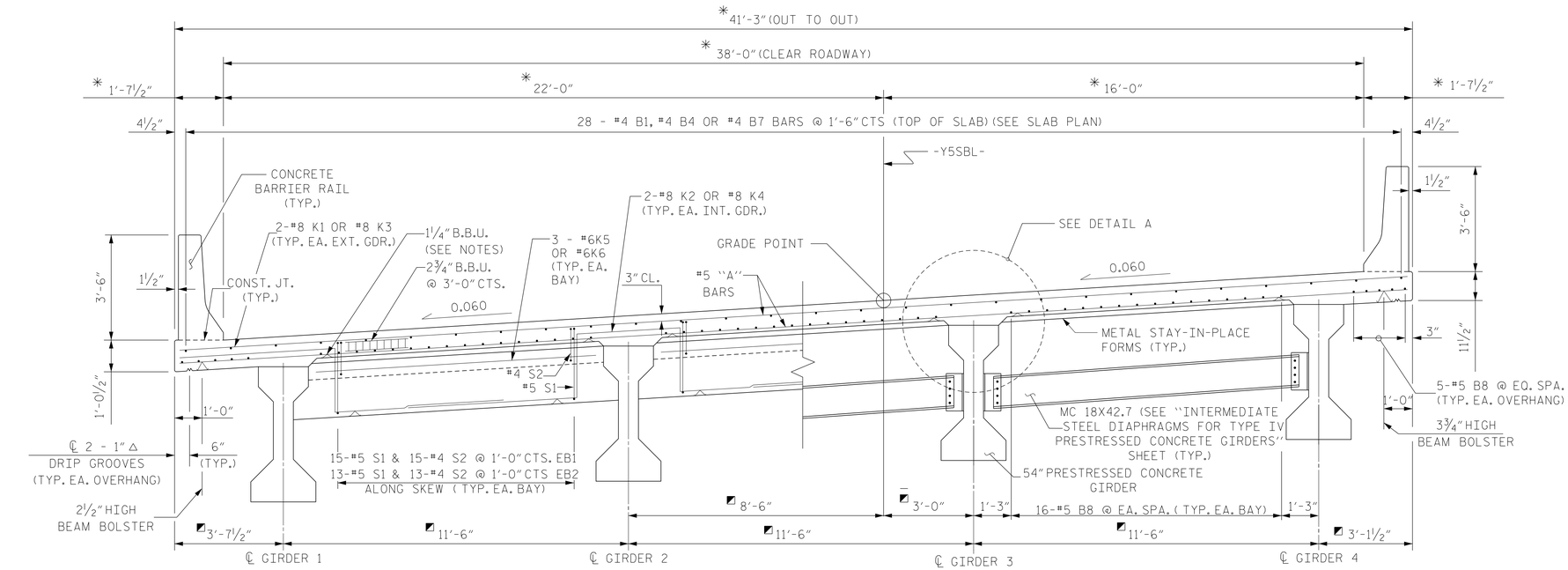

TYPICAL SECTION @ END BENT DIAPHRAGMS

◪ DIMENSIONS RADIAL THRU WORKPOINT

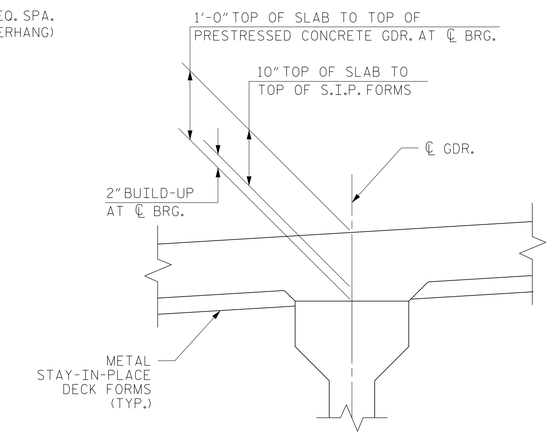

DETAIL A

NOTE: AN EXTRA 1/2" WAS ADDED TO TOP OF SLAB CLEAR COVER TO FACILITATE CONSTRUCTION

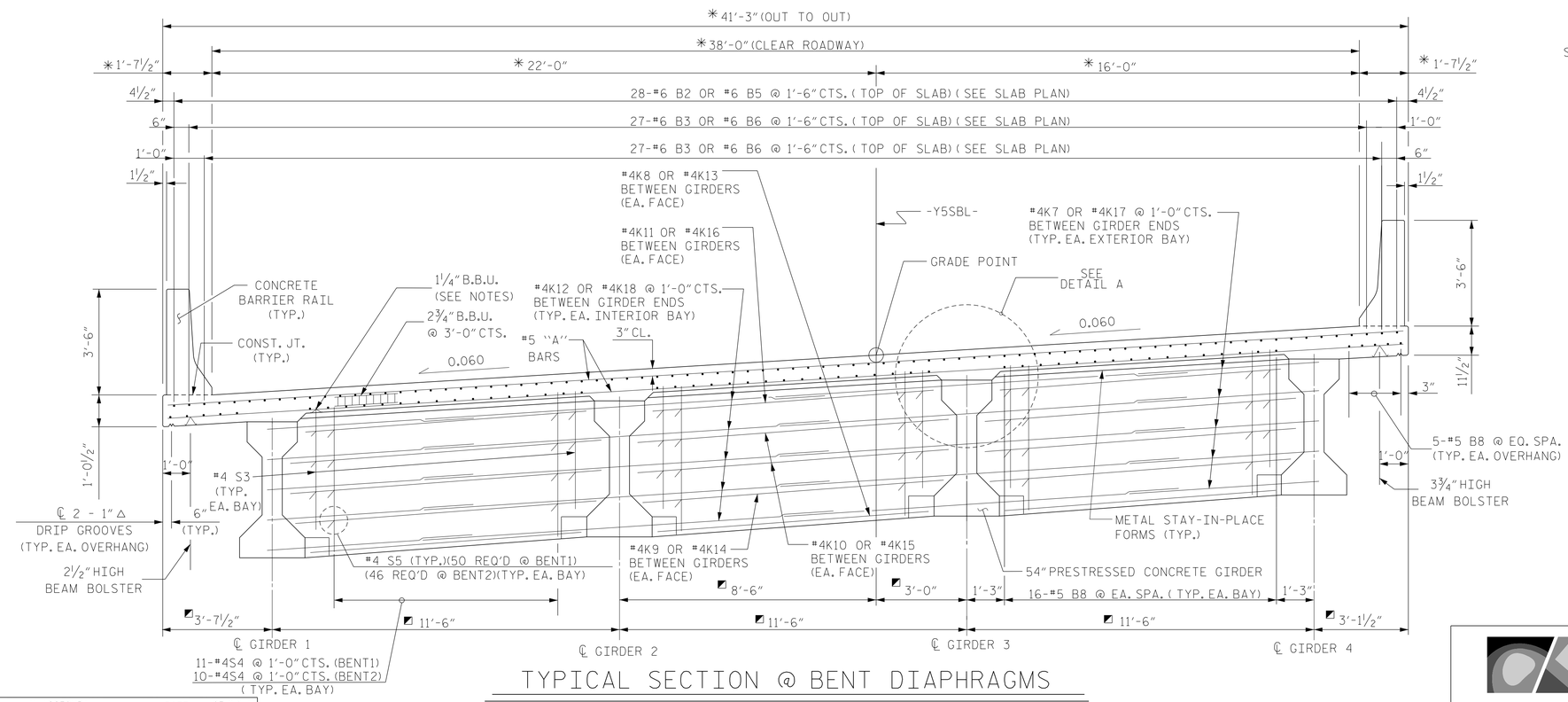

TYPICAL SECTION @ BENT DIAPHRAGMS

* RADIAL DIMENSIONS TO CL -Y5SBL-

◪ DIMENSIONS SHOWN ARE RADIAL THRU WORK POINTS.

PROJECT NO. I-0914BA

VANCE COUNTY

STATION: 21+34.80-Y5SBL-POC

SHEET 1 OF 2

NORTH CAROLINA PROFESSIONAL SEAL 11725 ENGINEER DAVID R. RUGGLES

DocuSigned by: David Ruggles C462768DF412422... 11/14/2014

DWG. 6 OF 40

STEWART

Firm License No. C-1051
421 Fayetteville St,
Suite 400
Raleigh, NC 27601
T 919.380.8750
www.stewartinc.com

STATE OF NORTH CAROLINA
DEPARTMENT OF TRANSPORTATION
RALEIGH

TYPICAL SECTION

REVISIONS						SHEET NO.
NO.	BY:	DATE:	NO.	BY:	DATE:	S-91
1			3			TOTAL SHEETS
2			4			177

DRAWN BY: H. ASSFOURA DATE: 07/14
CHECKED BY: D. RUGGLES DATE: 08/14
DESIGN ENGINEER OF RECORD: D. RUGGLES DATE: 08/14

I-914BA SITE 3
11/14/2014
...\403_006_I0914BA_SMU_TS01.dgn
USER:jloftus