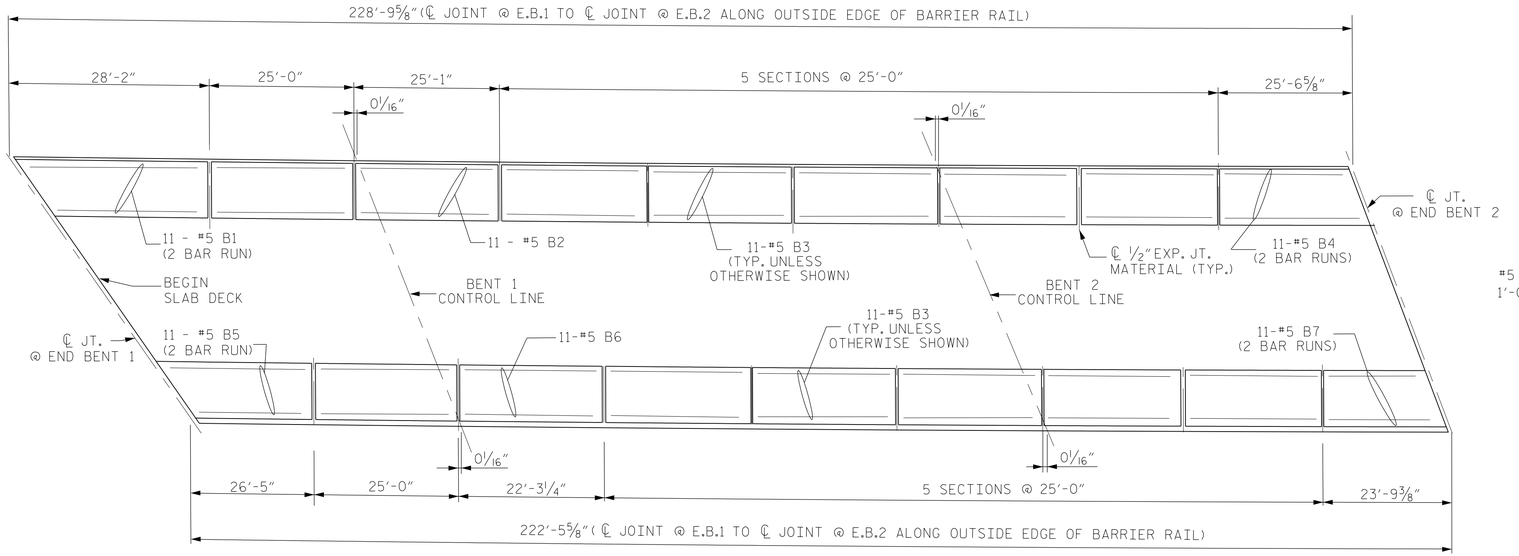

PLAN OF CONCRETE RAIL

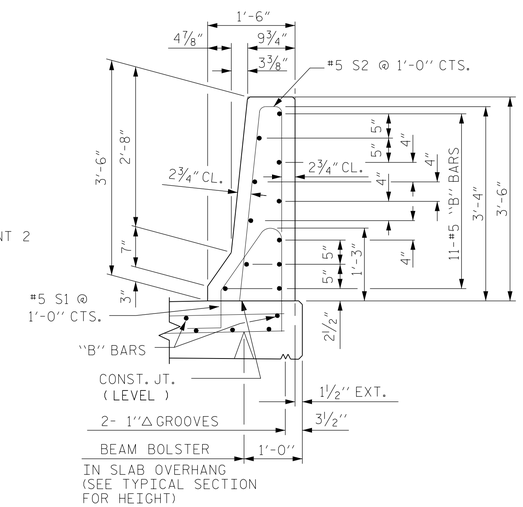

SECTION THRU RAIL

BAR TYPES

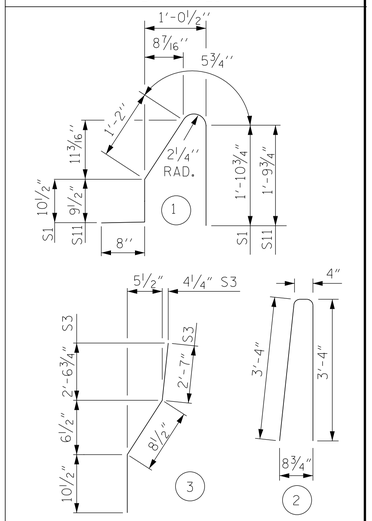

ALL BAR DIMENSIONS ARE OUT TO OUT

BILL OF MATERIAL

FOR CONCRETE BARRIER RAIL ONLY

BAR	NO.	SIZE	TYPE	LENGTH	WEIGHT
B1	22	#5	STR.	15'-8"	359
B2	11	#5	STR.	24'-8"	3385
B3	132	#5	STR.	24'-7"	283
B4	22	#5	STR.	15'-1"	346
B5	22	#5	STR.	15'-9"	361
B6	11	#5	STR.	21'-11"	251
B7	22	#5	STR.	13'-5"	308
S1	228	#5	1	5'-1"	1209
S11	222	#5	1	4'-11"	1138
S2	450	#5	2	7'-0"	3285
S3	2	#5	3	4'-2"	9
S4	4	#5	STR	4'-0"	17

* EPOXY COATED REINFORCING STEEL	10951	LBS
CLASS AA CONCRETE	61.3	CU. YDS.
CONCRETE BARRIER RAIL	451.27	LIN. FT.

NOTES

THE BARRIER RAIL IN A CONTINUOUS UNIT SHALL NOT BE CAST UNTIL ALL SLAB CONCRETE IN THAT UNIT HAS BEEN CAST AND HAS REACHED A MINIMUM COMPRESSIVE STRENGTH OF 3,000 PSI.

ALL REINFORCING STEEL IN BARRIER RAILS SHALL BE EPOXY COATED.

GROOVED CONTRACTION JOINTS, ½" IN DEPTH, SHALL BE TOOLED IN ALL EXPOSED FACES OF THE BARRIER RAIL AND IN ACCORDANCE WITH ARTICLE 825-10(B) OF THE STANDARD SPECIFICATIONS. THE CONTRACTION JOINT SHALL BE LOCATED AT EACH THIRD POINT BETWEEN BARRIER RAIL EXPANSION JOINTS. ONLY ONE CONTRACTION JOINT IS REQUIRED AT MIDPOINT OF BARRIER RAIL SEGMENTS LESS THAN 20 FEET IN LENGTH AND NO CONTRACTION JOINTS ARE REQUIRED FOR THOSE SEGMENTS LESS THAN 10 FEET IN LENGTH.

FOR BARRIER RAIL EXTENSION ON THE APPROACH SLAB, SEE "APPROACH SLAB DETAILS SHEET".

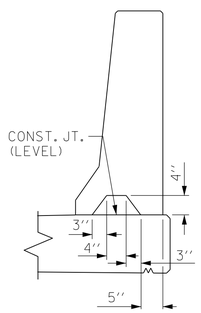

SECTION S-S

AT DAM IN OPEN JOINT (THIS IS TO BE USED ONLY WHEN SLIP FORM IS USED)

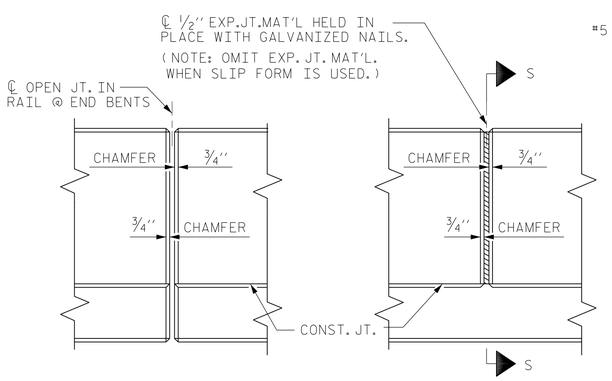

ELEVATION AT EXPANSION JOINTS

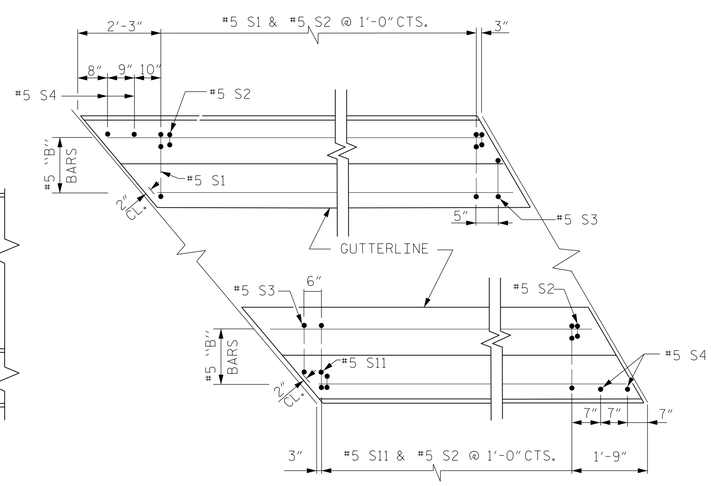

PLAN VIEW

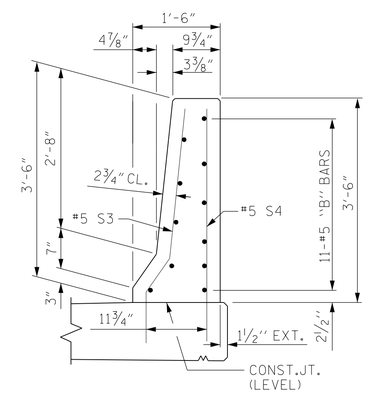

END VIEW

BARRIER RAIL DETAILS

END OF RAIL DETAILS

PROJECT NO. I-0914BA

VANCE COUNTY

STATION: 21+34.80-Y5SBL-POC

SHEET 1 OF 1

STATE OF NORTH CAROLINA
DEPARTMENT OF TRANSPORTATION
RALEIGH

CONCRETE BARRIER RAIL

NORTH CAROLINA PROFESSIONAL SEAL 11725 ENGINEER DAVID R. RUGGLES

DocuSigned by: David Ruggles C46276BDF412422... 11/14/2014

DWG. 20 OF 40

STEWART

Firm License No. C-1051
421 Fayetteville St,
Suite 400
Raleigh, NC 27601
T 919.380.8750
www.stewartinc.com

REVISIONS							SHEET NO.
NO.	BY:	DATE:	NO.	BY:	DATE:		S-105
1			3				TOTAL SHEETS
2			4				177

DRAWN BY:	H.ASSFOURA	DATE :	07/14
CHECKED BY:	D. RUGGLES	DATE :	08/14
DESIGN ENGINEER OF RECORD:	D. RUGGLES	DATE :	08/14

11/14/2014 I-914BA SITE 3
...\403_020_I0914BA_SMU_CBR01.dgn
USER:jloftus