BILL OF MATERIAL

BAR	NO.	SIZE	TYPE	LENGTH	WEIGHT	BAR	NO.	SIZE	TYPE	LENGTH	WEIGHT	BAR	NO.	SIZE	TYPE	LENGTH	WEIGHT
✳ A1	429	#5	STR	40'-10"	18,271	A45	429	#5	STR	40'-10"	18,271	✳ B1	56	#4	STR	17'-6"	655
✳ A2	5	#5	STR	39'-1"	204	A46	5	#5	STR	39'-1"	204	✳ B2	28	#6	STR	57'-0"	2,397
✳ A3	5	#5	STR	37'-4"	195	A47	5	#5	STR	37'-4"	195	✳ B3	54	#6	STR	24'-0"	1,947
✳ A4	5	#5	STR	35'-7"	186	A48	5	#5	STR	35'-7"	186	✳ B4	56	#4	STR	18'-1"	676
✳ A5	5	#5	STR	33'-10"	176	A49	5	#5	STR	33'-10"	176	✳ B5	56	#6	STR	33'-0"	2,776
✳ A6	5	#5	STR	32'-1"	167	A50	5	#5	STR	32'-1"	167	✳ B6	54	#6	STR	27'-0"	2,190
✳ A7	5	#5	STR	30'-4"	158	A51	5	#5	STR	30'-4"	158	✳ B7	56	#4	STR	25'-10"	966
✳ A8	5	#5	STR	28'-8"	149	A52	5	#5	STR	28'-8"	149	B8	232	#5	STR	58'-9"	14,216
✳ A9	5	#5	STR	26'-11"	140	A53	5	#5	STR	26'-11"	140						
✳ A10	5	#5	STR	25'-3"	132	A54	5	#5	STR	25'-3"	132	✳ G1	2	#5	STR	34'-8"	72
✳ A11	5	#5	STR	23'-6"	123	A55	5	#5	STR	23'-6"	123	✳ G2	2	#5	STR	30'-5"	63
✳ A12	5	#5	STR	21'-9"	113	A56	5	#5	STR	21'-9"	113	✳ G3	6	#6	STR	6'-6"	59
✳ A13	5	#5	STR	20'-1"	105	A57	5	#5	STR	20'-1"	105						
✳ A14	5	#5	STR	18'-4"	96	A58	5	#5	STR	18'-4"	96	✳ J1	116	#4	7	1'-5"	110
✳ A15	5	#5	STR	16'-8"	87	A59	5	#5	STR	16'-8"	87						
✳ A16	5	#5	STR	14'-11"	78	A60	5	#5	STR	14'-11"	78	✳ K1	4	#8	1	19'-4"	206
✳ A17	5	#5	STR	13'-3"	69	A61	5	#5	STR	13'-3"	69	✳ K2	4	#8	2	30'-8"	328
✳ A18	5	#5	STR	11'-6"	60	A62	5	#5	STR	11'-6"	60	✳ K3	4	#8	1	17'-8"	189
✳ A19	5	#5	STR	9'-10"	51	A63	5	#5	STR	9'-10"	51	✳ K4	4	#8	2	28'-3"	302
✳ A20	5	#5	STR	8'-1"	42	A64	5	#5	STR	8'-1"	42	✳ K5	9	#6	STR	15'-3"	206
✳ A21	5	#5	STR	6'-5"	33	A65	5	#5	STR	6'-5"	33	✳ K6	9	#6	STR	13'-5"	181
✳ A22	5	#5	STR	4'-9"	25	A66	5	#5	STR	4'-9"	25	K7	10	#4	8	10'-7"	71
✳ A23	5	#5	STR	3'-0"	16	A67	5	#5	STR	3'-0"	16	K8	6	#4	STR	14'-1"	56
✳ A24	3	#5	STR	2'-0"	6	A68	3	#5	STR	2'-0"	6	K9	6	#4	STR	15'-8"	63
✳ A25	5	#5	STR	38'-10"	203	A69	5	#5	STR	38'-10"	203	K10	12	#4	STR	16'-5"	132
✳ A26	5	#5	STR	36'-11"	193	A70	5	#5	STR	36'-11"	193	K11	6	#4	STR	14'-10"	59
✳ A27	5	#5	STR	34'-11"	182	A71	5	#5	STR	34'-11"	182	K12	10	#4	9	21'-2"	141
✳ A28	5	#5	STR	33'-0"	172	A72	5	#5	STR	33'-0"	172	K13	6	#4	STR	13'-3"	53
✳ A29	5	#5	STR	31'-1"	162	A73	5	#5	STR	31'-1"	162	K14	6	#4	STR	14'-9"	59
✳ A30	5	#5	STR	29'-1"	152	A74	5	#5	STR	29'-1"	152	K15	12	#4	STR	15'-5"	124
✳ A31	5	#5	STR	27'-2"	142	A75	5	#5	STR	27'-2"	142	K16	6	#4	STR	14'-0"	56
✳ A32	5	#5	STR	25'-3"	132	A76	5	#5	STR	25'-3"	132	K17	10	#4	8	10'-0"	67
✳ A33	5	#5	STR	23'-3"	121	A77	5	#5	STR	23'-3"	121	K18	10	#4	9	20'-0"	134
✳ A34	5	#5	STR	21'-4"	111	A78	5	#5	STR	21'-4"	111						
✳ A35	5	#5	STR	19'-4"	101	A79	5	#5	STR	19'-4"	101	✳ S1	84	#5	3	5'-11"	518
✳ A36	5	#5	STR	17'-5"	91	A80	5	#5	STR	17'-5"	91	✳ S2	84	#4	5	5'-0"	281
✳ A37	5	#5	STR	15'-5"	80	A81	5	#5	STR	15'-5"	80	S3	12	#4	4	14'-2"	114
✳ A38	5	#5	STR	13'-5"	70	A82	5	#5	STR	13'-5"	70	S4	63	#4	4	15'-10"	666
✳ A39	5	#5	STR	11'-6"	60	A83	5	#5	STR	11'-6"	60	S5	288	#4	6	2'-9"	529
✳ A40	5	#5	STR	9'-6"	50	A84	5	#5	STR	9'-6"	50						
✳ A41	5	#5	STR	7'-6"	39	A85	5	#5	STR	7'-6"	39						
✳ A42	5	#5	STR	5'-7"	29	A86	5	#5	STR	5'-7"	29						
✳ A43	5	#5	STR	3'-7"	19	A87	5	#5	STR	3'-7"	19						
✳ A44	4	#5	STR	2'-0"	8	A88	4	#5	STR	2'-0"	8						

✳ DENOTES EPOXY COATED REINFORCEMENT

BAR TYPES

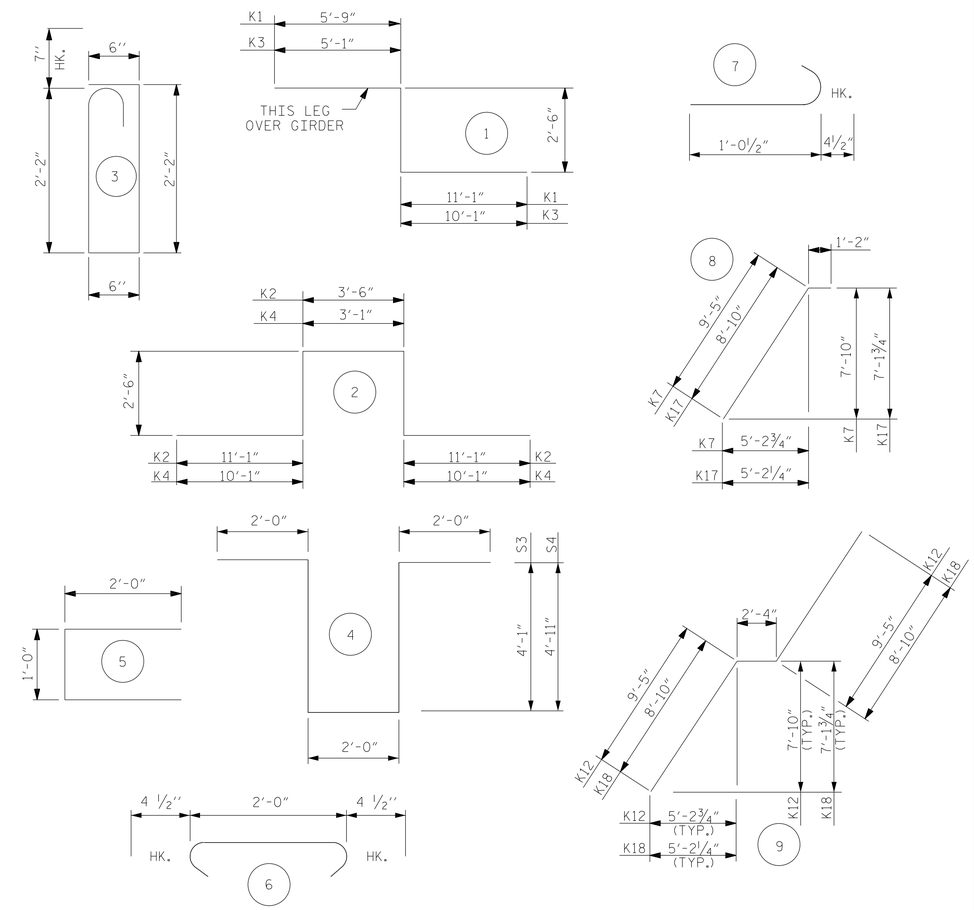

ALL BAR DIMENSIONS ARE OUT TO OUT

SUPERSTRUCTURE REINFORCING STEEL LENGTHS ARE BASED ON THE FOLLOWING MINIMUM SPLICE LENGTHS

BAR SIZE	SUPERSTRUCTURE EXCEPT APPROACH SLABS, PARAPET, AND BARRIER RAIL		APPROACH SLABS		PARAPET AND BARRIER RAIL
	EPOXY COATED	UNCOATED	EPOXY COATED	UNCOATED	
#4	2'-0"	1'-9"	2'-0"	1'-9"	2'-9"
#5	2'-6"	2'-2"	2'-6"	2'-2"	3'-5"
#6	3'-0"	2'-7"	3'-10"	2'-7"	4'-4"
#7	5'-3"	3'-6"			
#8	6'-10"	4'-7"			

SUPERSTRUCTURE BILL OF MATERIAL

	CLASS AA CONCRETE	REINFORCING STEEL	EPOXY COATED REINFORCING STEEL
	(CU. YDS.)	(LBS.)	(LBS.)
POUR 1	69.8		
POUR 2	155.5		
POUR 3	144.9		
TOTALS ✳✳	370.2	39,339	36,921

✳✳ QUANTITIES FOR BARRIER RAIL ARE NOT INCLUDED

GROOVING BRIDGE FLOORS

APPROACH SLABS	2,646	SQ.FT.
BRIDGE DECK	7,871	SQ.FT.
TOTAL	10,517	SQ.FT.

PROJECT NO. I-0914BA

VANCE COUNTY

STATION: 21+34.80-Y5SBL-POC

SHEET 2 OF 2

NORTH CAROLINA PROFESSIONAL SEAL 11725 ENGINEER DAVID R. RUGGLES

DocuSigned by: David Ruggles C462768DF412422 11/14/2014

DWG. 25 OF 40

STEWART
Firm License No. C-1051
421 Fayetteville St,
Suite 400
Raleigh, NC 27601
T 919.380.8750
www.stewartinc.com

STATE OF NORTH CAROLINA
DEPARTMENT OF TRANSPORTATION
RALEIGH

SUPERSTRUCTURE BILL OF MATERIAL

REVISIONS						SHEET NO.
NO.	BY:	DATE:	NO.	BY:	DATE:	S-110
1			3			TOTAL SHEETS
2			4			177

DRAWN BY: H.ASSFOURA DATE : 08/14
CHECKED BY: D. RUGGLES DATE : 08/14
DESIGN ENGINEER OF RECORD: D. RUGGLES DATE : 08/14

I-914BA SITE 3
11/14/2014
...\403_025_I0914BA_SMU_BOM02.dgn
USER:jloftus