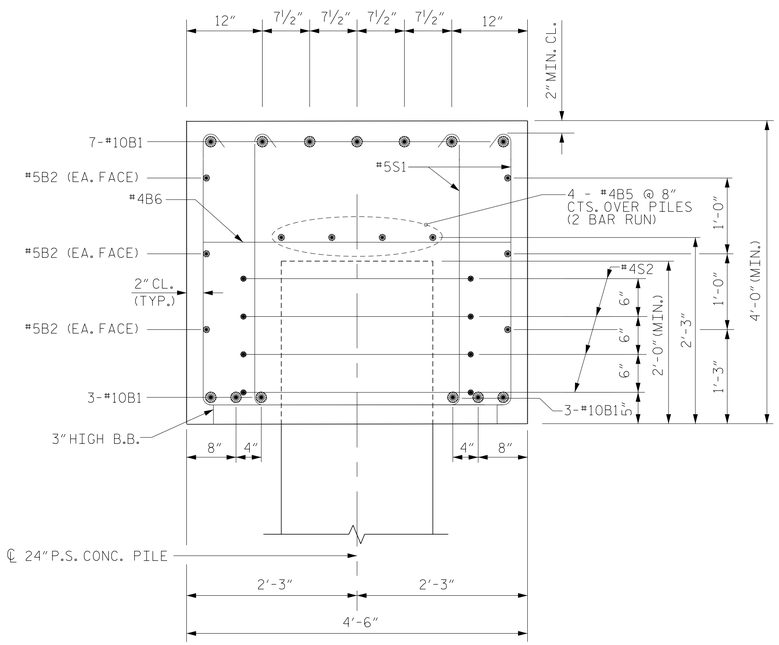

SECTION A-A

INVERT ALTERNATE STIRRUPS

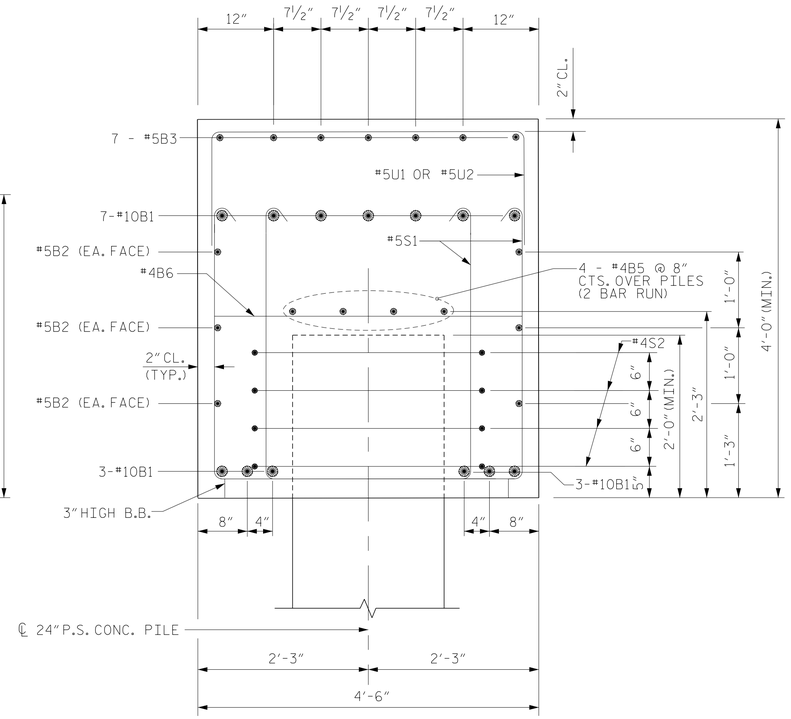

SECTION B-B

INVERT ALTERNATE STIRRUPS

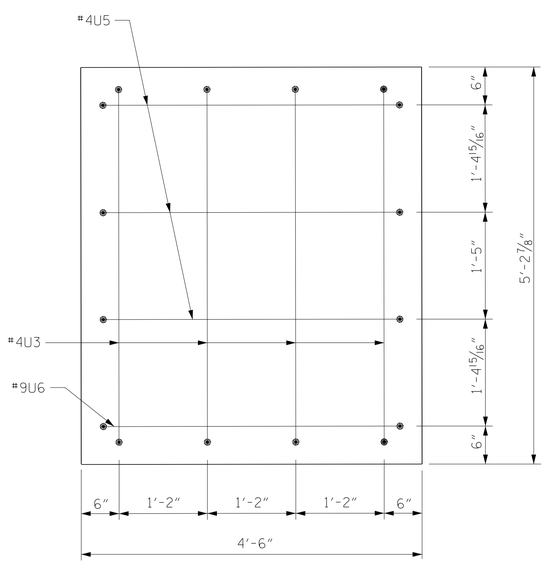

VIEW X-X

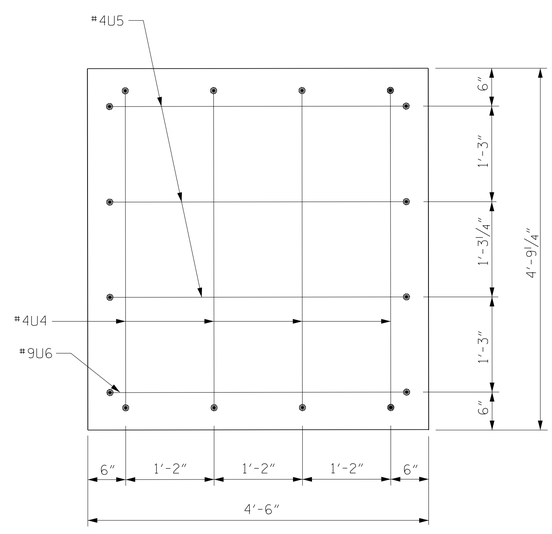

VIEW Y-Y

BAR TYPES

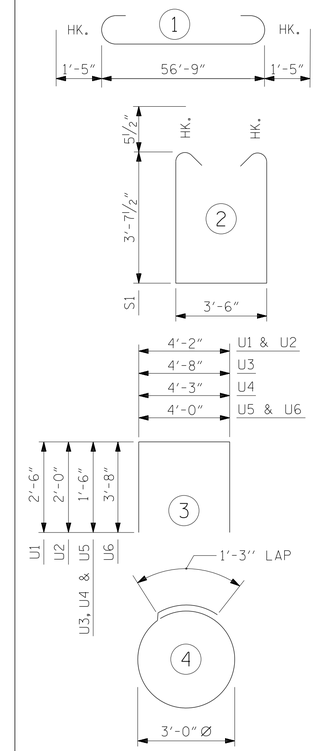

ALL BAR DIMENSIONS ARE OUT TO OUT.

BILL OF MATERIAL

BENT No. 2

BAR	NO.	SIZE	TYPE	LENGTH	WEIGHT
B1	13	#10	1	59'-7"	3333
B2	6	#5	STR	56'-9"	355
B3	21	#5	STR	15'-0"	329
B4	7	#5	STR	5'-3"	38
B5	8	#4	STR	29'-8"	159
B6	14	#4	STR	4'-2"	39
S1	100	#5	2	11'-8"	1217
S2	36	#4	4	10'-9"	259
U1	45	#5	3	9'-2"	430
U2	18	#5	3	8'-2"	153
U3	4	#4	3	7'-8"	20
U4	4	#4	3	7'-3"	19
U5	6	#4	3	7'-0"	28
U6	2	#9	3	11'-4"	77

REINFORCING STEEL = 6456 LBS

CLASS A CONCRETE = 44.2 (CU. YDS.)

24" P.S. CONCRETE PILES
NO: 9 LIN. FT.= 473

PROJECT NO. I-0914BA

VANCE COUNTY

STATION: 21+34.80-Y5SBL-POC

SHEET 2 OF 2

NORTH CAROLINA PROFESSIONAL SEAL 11725 ENGINEER DAVID R. RUGGLES

DocuSigned by: David Ruggles C46276BDF412422... 11/14/2014

DWG. 32 OF 40

Firm License No. C-1051
421 Fayetteville St,
Suite 400
Raleigh, NC 27601
T 919.380.8750
www.stewartinc.com
STEWART

STATE OF NORTH CAROLINA
DEPARTMENT OF TRANSPORTATION
RALEIGH

SUBSTRUCTURE
BENT No. 2

REVISIONS						SHEET NO.
NO.	BY:	DATE:	NO.	BY:	DATE:	S-117
1			3			TOTAL SHEETS
2			4			177

DRAWN BY: J. LOFTUS DATE : 07/14
CHECKED BY: D. RUGGLES DATE : 08/14
DESIGN ENGINEER OF RECORD: D. RUGGLES DATE : 08/14

11/14/2014 I-914BA SITE 3
...\403_032_I0914BA_SMU_2B02.dgn
USER:jloftus