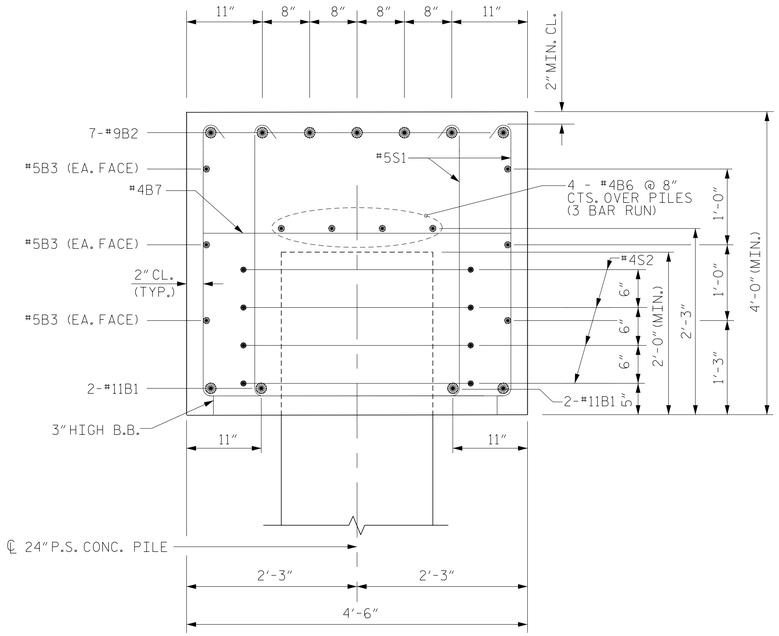

SECTION A-A

INVERT ALTERNATE STIRRUPS

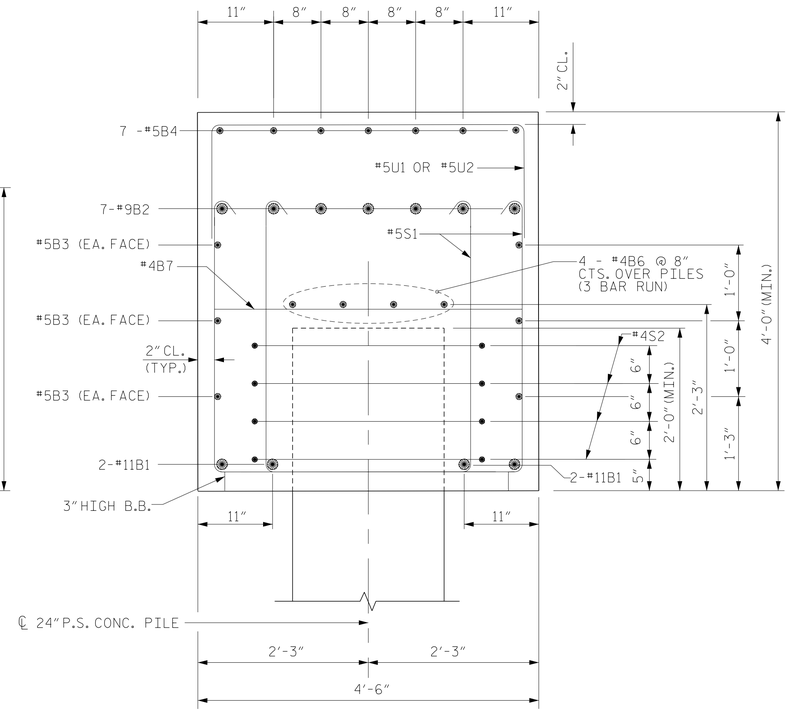

SECTION B-B

INVERT ALTERNATE STIRRUPS

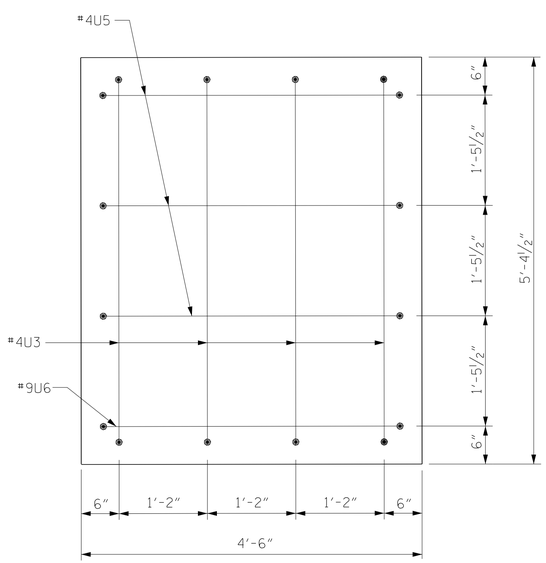

VIEW X-X

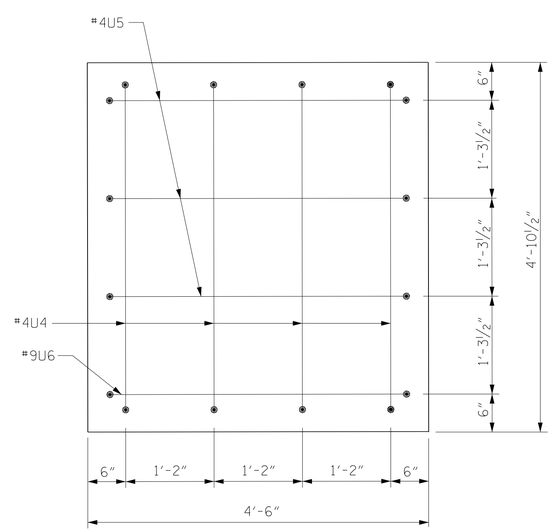

VIEW Y-Y

BAR TYPES

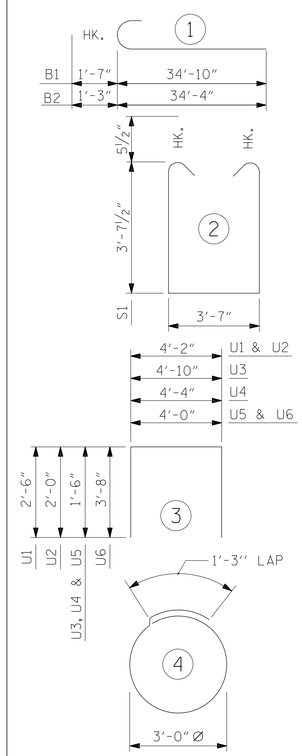

ALL BAR DIMENSIONS ARE OUT TO OUT.

BILL OF MATERIAL

BENT No. 1

BAR	NO.	SIZE	TYPE	LENGTH	WEIGHT
B1	8	#11	1	36'-6"	1551
B2	14	#9	1	35'-7"	1694
B3	12	#5	STR	31'-6"	394
B4	21	#5	STR	15'-0"	329
B5	7	#5	STR	5'-3"	38
B6	12	#4	STR	21'-7"	173
B7	15	#4	STR	4'-2"	42
S1	100	#5	2	11'-9"	1226
S2	36	#4	4	10'-9"	259
U1	45	#5	3	9'-2"	430
U2	18	#5	3	8'-2"	153
U3	4	#4	3	7'-10"	21
U4	4	#4	3	7'-4"	20
U5	6	#4	3	7'-0"	28
U6	2	#9	3	11'-4"	77

REINFORCING STEEL = 6435 LBS

CLASS A CONCRETE = 47.3 (CU. YDS.)

24" P.S. CONCRETE PILES
NO: 9 LIN. FT.= 473

PROJECT NO. I-0914BA

VANCE COUNTY

STATION: 21+34.80-Y5SBL-POC

SHEET 2 OF 2

NORTH CAROLINA PROFESSIONAL SEAL 11725 ENGINEER DAVID R. RUGGLES

DocuSigned by: David Ruggles C462768DF412422... 11/14/2014

DWG. 30 OF 40

STATE OF NORTH CAROLINA
DEPARTMENT OF TRANSPORTATION
RALEIGH

SUBSTRUCTURE
BENT No. 1

STEWART
Firm License No. C-1051
421 Fayetteville St,
Suite 400
Raleigh, NC 27601
T 919.380.8750
www.stewartinc.com

REVISIONS						
NO.	BY:	DATE:	NO.	BY:	DATE:	
1			3			
2			4			

SHEET NO. S-115

TOTAL SHEETS 177

DRAWN BY: J. LOFTUS DATE : 07/14
CHECKED BY: D. RUGGLES DATE : 08/14
DESIGN ENGINEER OF RECORD: D. RUGGLES DATE : 08/14

11/14/2014 I-914BA SITE 3
...\403_030_I0914BA_SMU_1B02.dgn
USER:jloftus