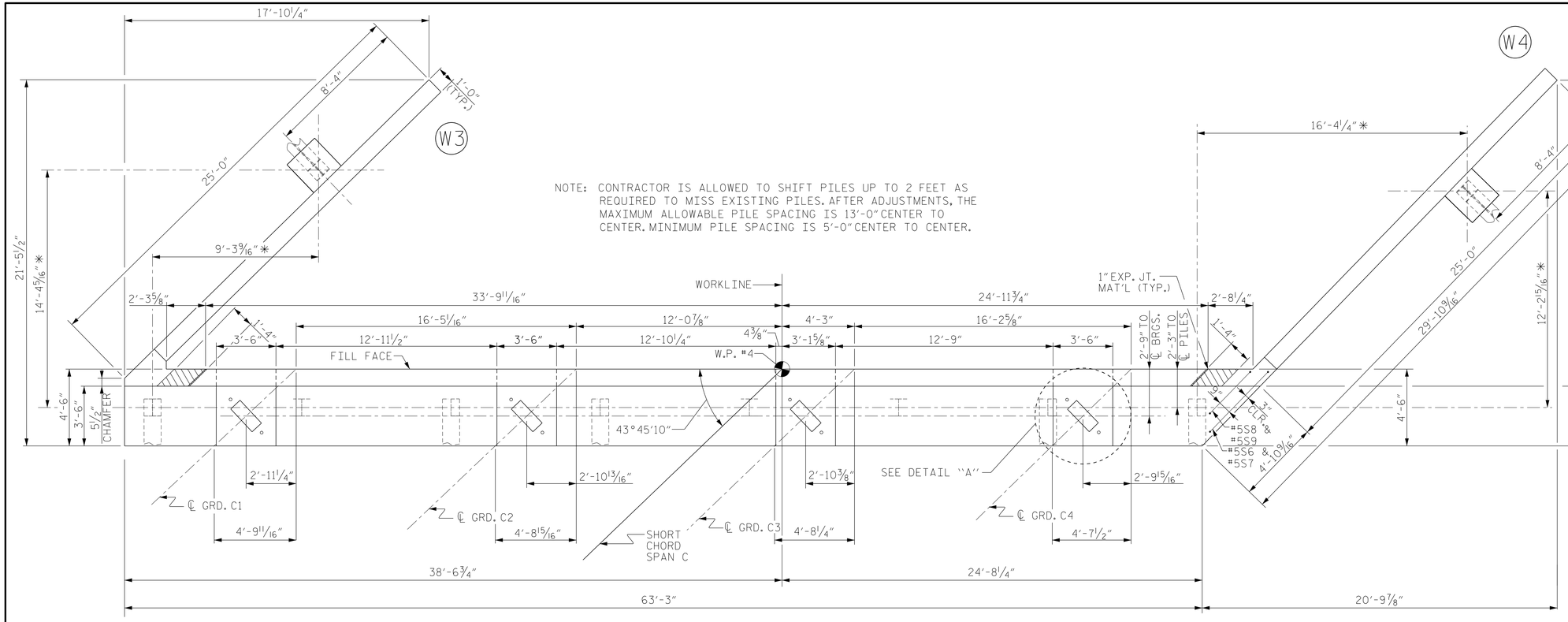

NOTE: CONTRACTOR IS ALLOWED TO SHIFT PILES UP TO 2 FEET AS REQUIRED TO MISS EXISTING PILES. AFTER ADJUSTMENTS, THE MAXIMUM ALLOWABLE PILE SPACING IS 13'-0" CENTER TO CENTER. MINIMUM PILE SPACING IS 5'-0" CENTER TO CENTER.

PLAN

NOTES

STIRRUPS IN CAP MAY BE SHIFTED AS NECESSARY TO CLEAR ANCHOR BOLTS.

THE CONCRETE IN THE SHADED AREA OF THE WING SHALL BE POURED AFTER THE VERTICAL CONCRETE BARRIER RAIL IS CAST IF SLIP FORMING IS USED.

FOR BEARING DETAILS, SEE ELASTOMERIC BEARING DETAILS SHEET.

FOR PILE SPLICE DETAILS, SEE END BENT No.1 SHEET 3 OF 3.

BACKWALL SHALL BE PLACED BEFORE APPLYING THE EPOXY PROTECTIVE COATING.

THE TOP SURFACE AREAS OF THE END BENT CAPS SHALL BE CURED IN ACCORDANCE WITH THE STANDARD SPECIFICATIONS EXCEPT THE MEMBRANE CURING COMPOUND METHOD SHALL NOT BE USED.

INSTALL THE 4" DIA. DRAIN PIPE THROUGH THE WING WALL AS REQUIRED FOR REINFORCED BRIDGE APPROACH FILLS, SEE THE ROADWAY PLANS. REINFORCING STEEL IN THE WING WALL MAY BE SHIFTED AS NECESSARY TO CLEAR THE DRAIN PIPE.

FOR CONCRETE COLLAR DETAIL, SEE END BENT No.1 SHEET 3 OF 3.

✱ DIMENSIONS ARE SHOWN AT BOTTOM OF CAP

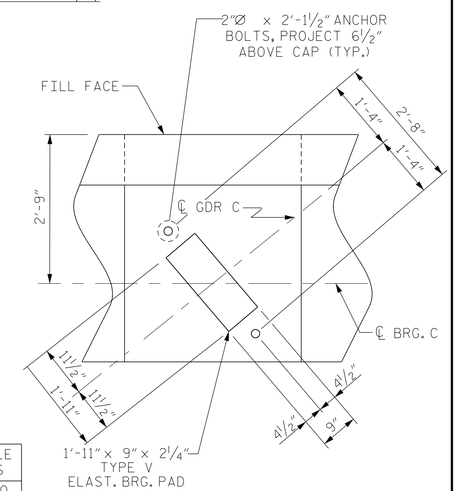

DETAIL "A"

(DIMENSIONS ARE TYPICAL EACH GIRDER)
(HP 12X53 PILES NOT SHOWN FOR CLARITY)

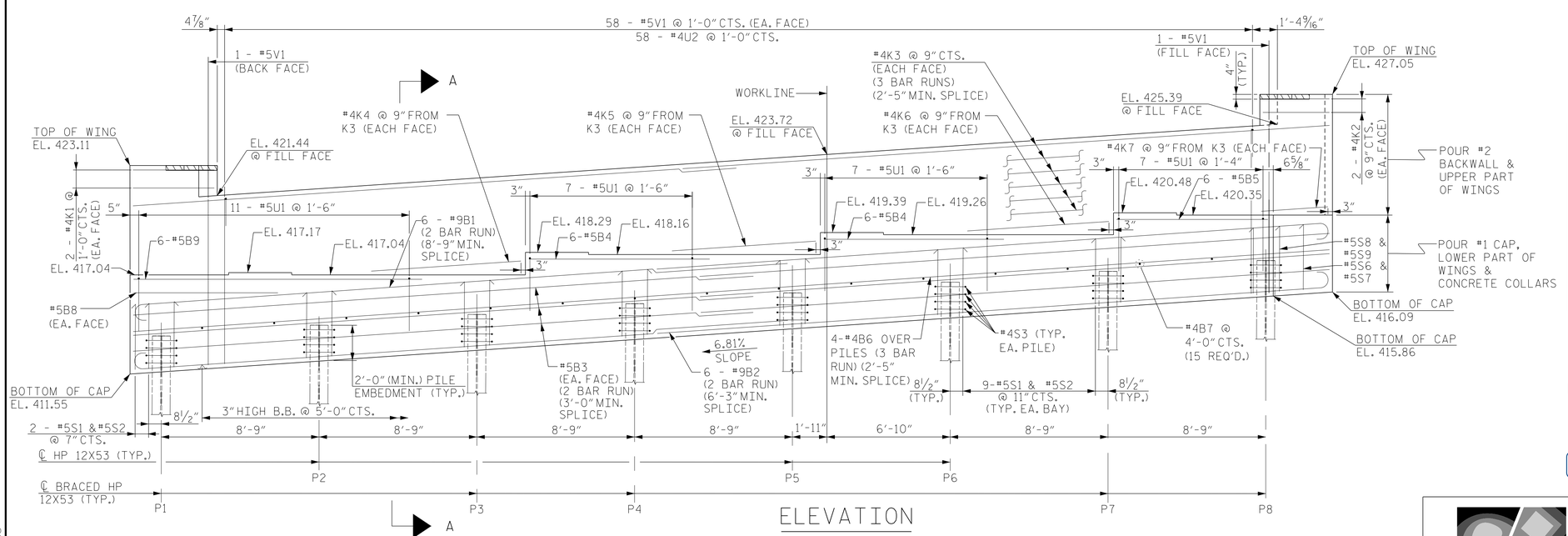

ELEVATION

WINGS NOT SHOWN FOR CLARITY.
FOR SECTION A-A, SEE SHEET 3 OF 3.
CONCRETE COLLARS FOR STEEL PILES NOT SHOWN IN PLAN AND ELEVATION VIEWS FOR CLARITY.
SEE "CORROSION PROTECTION FOR STEEL PILES DETAIL", END BENT No.1 SHEET 3 OF 3.

TOP OF PILE ELEVATIONS	
P1	413.70
P2	414.29
P3	414.89
P4	415.49
P5	416.08
P6	416.68
P7	417.28
P8	417.87
W3	413.55
W4	418.09

PROJECT NO. I-0914BA
VANCE COUNTY
STATION: 21+34.80-Y5SBL-POC

SHEET 1 OF 3

STATE OF NORTH CAROLINA
DEPARTMENT OF TRANSPORTATION
RALEIGH

SUBSTRUCTURE
END BENT No. 2

NORTH CAROLINA PROFESSIONAL SEAL 11725 ENGINEER DAVID R. RUGGLES

DocuSigned by: David Ruggles C46276BDF412422... 11/14/2014

DWG. 33 OF 40

STEWART
Firm License No. C-1051
421 Fayetteville St,
Suite 400
Raleigh, NC 27601
T 919.380.8750
www.stewartinc.com

REVISIONS							
NO.	BY:	DATE:	NO.	BY:	DATE:	SHEET NO.	S-118
1			3			TOTAL SHEETS	177
2			4				

DRAWN BY:	J. LOFTUS	DATE :	07/14
CHECKED BY:	D. RUGGLES	DATE :	08/14
DESIGN ENGINEER OF RECORD:	D. RUGGLES	DATE :	08/14

I-914BA SITE 3
11/14/2014
...\403_033_I0914BA_SMU_2EB01.dgn
USER:jloftus