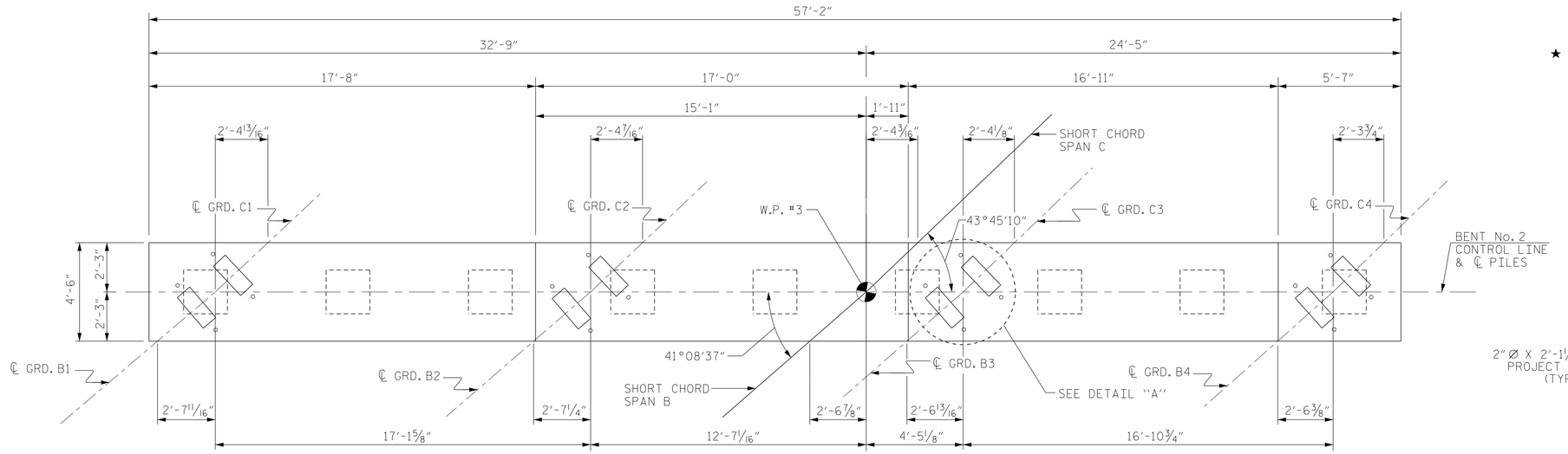

NOTES

STIRRUPS IN CAP MAY BE SHIFTED AS NECESSARY TO CLEAR ANCHOR BOLTS.

★ INVERT ALTERNATE STIRRUPS.

GIRDER BEARING OFFSET FROM BENT #2 ℄	
GIRDER	OFFSET
B1	8 3/4"
B2	8 13/16"
B3	8 7/8"
B4	9"
C1	9 1/4"
C2	9 5/16"
C3	9 3/8"
C4	9 7/16"

TOP OF PILE ELEVATIONS	
P1	411.28
P2	411.74
P3	412.20
P4	412.66
P5	413.12
P6	413.57
P7	414.03
P8	414.49
P9	414.95

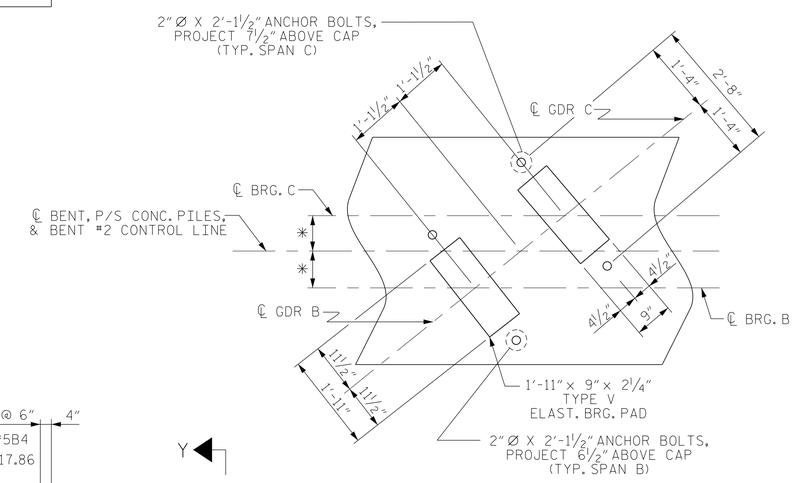

DETAIL "A"

* SEE TABLE FOR DIMENSIONS
(24" P.S. CONCRETE PILES NOT SHOWN FOR CLARITY)

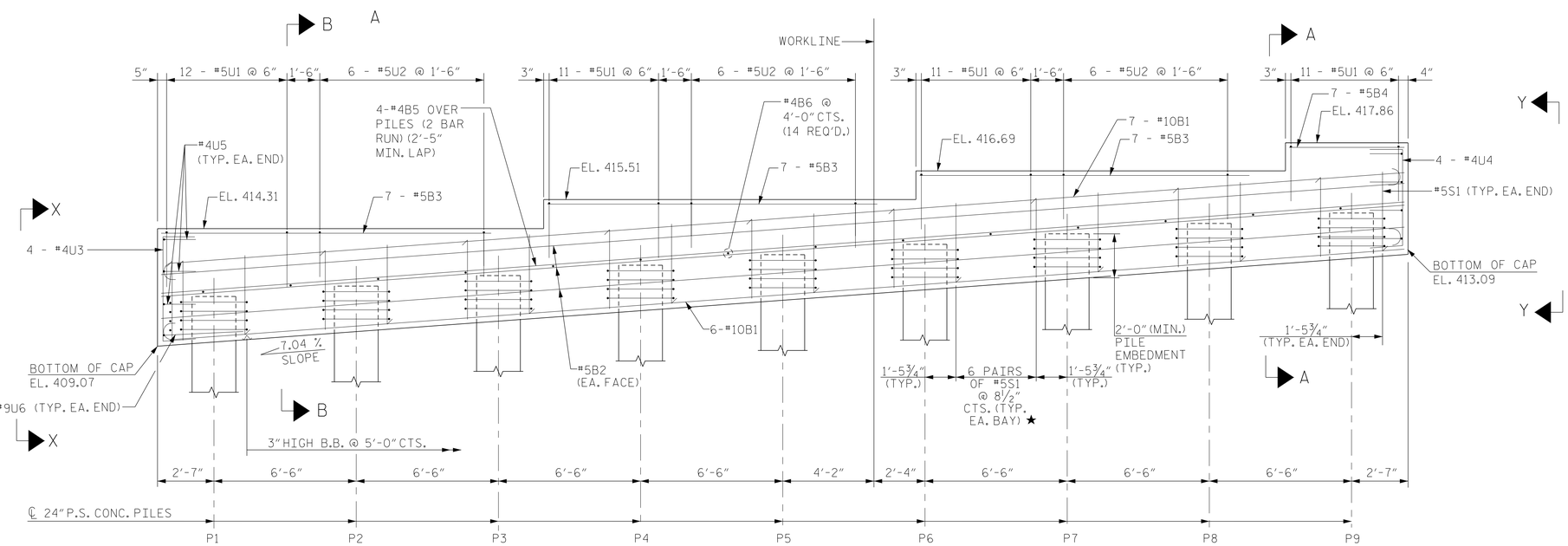

PROJECT NO. I-0914BA

VANCE COUNTY

STATION: 21+34.80-Y5SBL-POC

SHEET 1 OF 2

NORTH CAROLINA PROFESSIONAL SEAL 11725 ENGINEER DAVID R. RUGGLES

DocuSigned by: David Ruggles C4627680DF412422 11/14/2014

DWG. 31 OF 40

STATE OF NORTH CAROLINA
DEPARTMENT OF TRANSPORTATION
RALEIGH

SUBSTRUCTURE
BENT No. 2

STEWART

Firm License No. C-1051
421 Fayetteville St,
Suite 400
Raleigh, NC 27601
T 919.380.8750
www.stewartinc.com

REVISIONS						SHEET NO.
NO.	BY:	DATE:	NO.	BY:	DATE:	S-116
1			3			TOTAL SHEETS
2			4			177

DRAWN BY:	J. LOFTUS	DATE :	07/14
CHECKED BY:	D. RUGGLES	DATE :	08/14
DESIGN ENGINEER OF RECORD:	D. RUGGLES	DATE :	08/14

11/14/2014
...\403_031_I0914BA_SMU_2B01.dgn
USER:jloftus
I-9148A SITE 3