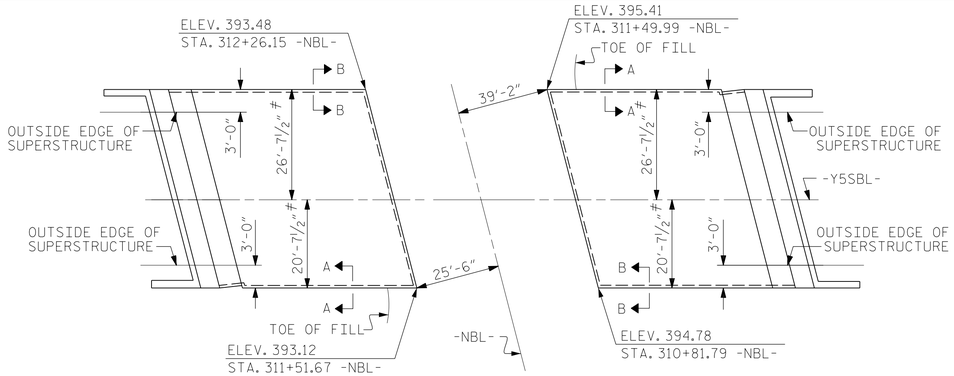

MEASURED RADIALLY

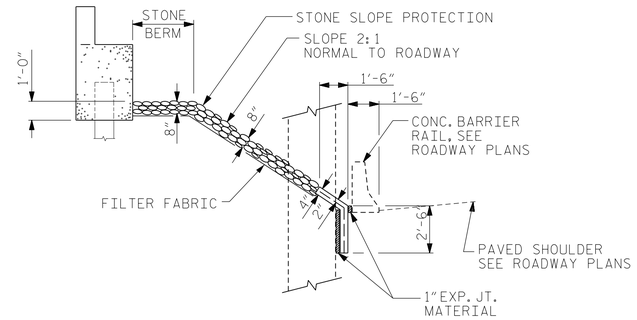

SECTION ALONG ℄ ROADWAY WITH SHOULDER PIER

DETAILS FOR ALTERNATE "B"

GENERAL NOTES

SLOPE PROTECTION SHALL BE PLACED UNDER THE ENDS OF THE BRIDGE AS SHOWN IN THE DETAILS. THE CONTRACTOR, AT HIS OPTION, MAY USE ALTERNATE "B" ONLY FOR HIGHWAY OVER HIGHWAY GRADE SEPARATIONS WITH 2:1 END BENT SLOPE IN RURAL, UNPOPULATED AREAS. STRAIGHT EDGING WILL NOT BE REQUIRED UNLESS, IN THE OPINION OF THE ENGINEER, VISUAL INSPECTION INDICATES A NEED FOR IT. MEASUREMENT AND PAYMENT SHALL BE AS PRESCRIBED IN SECTION 462 OF THE STANDARD SPECIFICATIONS. FOR BERM WIDTH, SEE GENERAL DRAWING.

ALTERNATE "A"

ALTERNATE "A" SHALL CONSIST OF 4" POURED-IN-PLACE CONCRETE PAVING AS SHOWN IN THE DETAILS ON THIS SHEET. CONCRETE SHALL BE CLASS "B". THE CONCRETE SURFACE SHALL BE FLOATED WITH A WOODEN FLOAT AND FINISHED. WELDED WIRE FABRIC REINFORCING SHALL BE 6 X 6 - W1.4 X W1.4, 60" WIDE. SLOPE PROTECTION SHALL BE POURED IN 5' STRIPS AS SHOWN IN THE "POURING DETAIL" WITH 2'-0" LONG #4 BARS PLACED ALONG THE SLOPE BETWEEN STRIPS AT 1'-6" MAXIMUM SPACING. SLOPE PROTECTION MAY BE POURED IN ALTERNATE 4' AND 5' STRIPS AS SHOWN IN THE "OPTIONAL POURING DETAIL" WITH ADJACENT RUNS OF WELDED WIRE FABRIC LAPPING AT LEAST 6". THE COST OF THE WELDED WIRE FABRIC AND #4 BARS, IF USED, SHALL BE INCLUDED IN THE CONTRACT UNIT PRICE BID PER SQUARE YARD FOR SLOPE PROTECTION.

ALTERNATE "B"

ALTERNATE "B" SHALL CONSIST OF A COMBINATION CONCRETE SLAB AND STONE SLOPE PROTECTION. THE CONCRETE PORTIONS SHALL CONSIST OF PAVED STRIPS ALONG THE DITCH AS SHOWN IN THE DETAILS. FILTER FABRIC AND 8" OF STONE SHALL BE PLACED OVER THE REMAINING AREA SHOWN ON THE PLANS TO BE COVERED WITH SLOPE PROTECTION. CONCRETE SHALL BE CLASS "B". THE COST OF THE CONCRETE, FILTER FABRIC, STONE AND WELDED WIRE FABRIC 6 X 6 - W1.4 X W1.4, SHALL BE INCLUDED IN THE CONTRACT UNIT PRICE BID PER SQUARE YARD FOR SLOPE PROTECTION. SUBGRADING, STONE TYPE, STONE SIZING, AND HERBICIDE PROTECTION, SHALL BE IN ACCORDANCE WITH THE STANDARD SPECIFICATIONS EXCEPT THE HERBICIDE TYPE SHALL BE SUBMITTED TO THE ENGINEER FOR APPROVAL PRIOR TO APPLICATION.

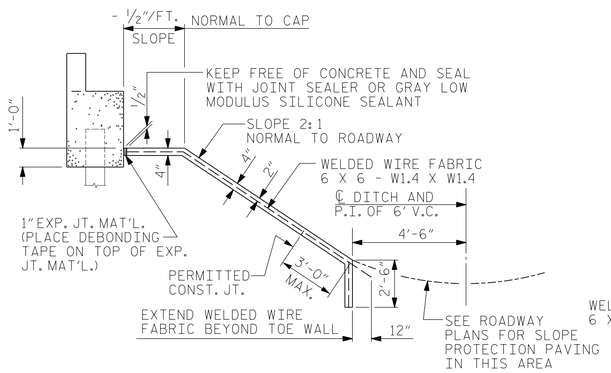

SECTION ALONG ℄ ROADWAY WHEN FILL CATCHES IN DITCH

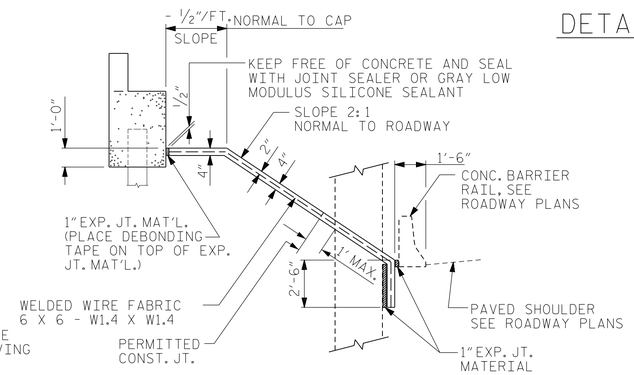

SECTION ALONG ℄ ROADWAY WITH SHOULDER PIER

DETAILS FOR ALTERNATE "A"

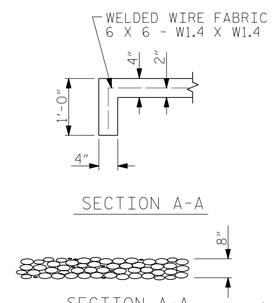

SECTION A-A

SECTION A-A

BRIDGE @ STA. 21+34.80 -Y5SBL-	4 INCH SLOPE PROTECTION	* WELDED WIRE FABRIC 60 INCHES WIDE
	SQUARE YARDS	APPROX. L.F.
END BENT 1	329	582
END BENT 2	420	776

* QUANTITY SHOWN IS BASED ON 5' POURS.

FOR BERM WIDTHS, SEE GENERAL DRAWING

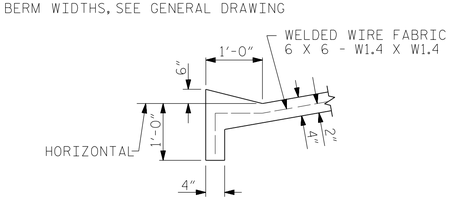

SECTION B-B

SECTION B-B

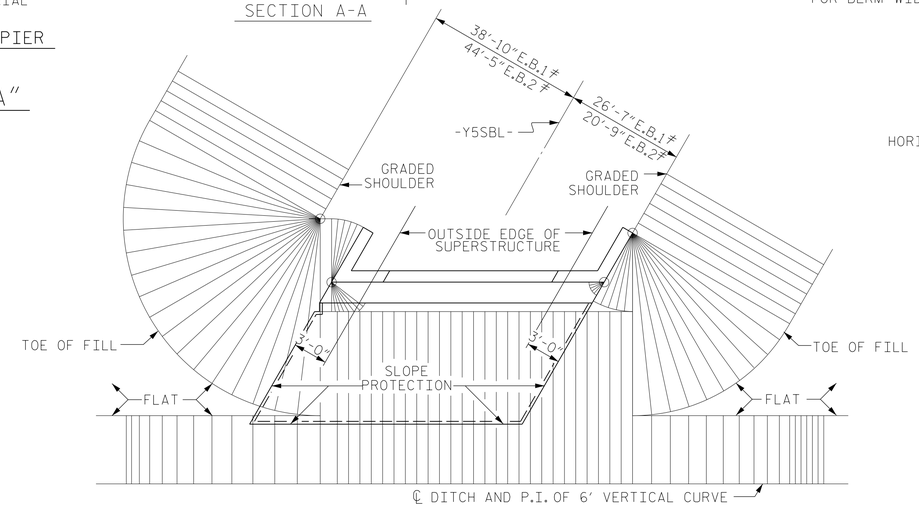

PLAN - END BENT WITH SWEPT BACK WINGS - SKEWED

(2:1 SLOPE)

MEASURED RADIALLY

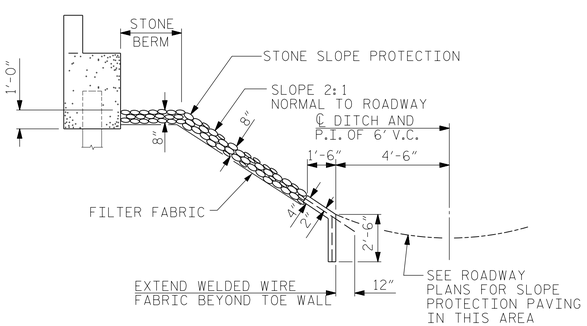

SECTION ALONG ℄ ROADWAY WHEN FILL CATCHES IN DITCH

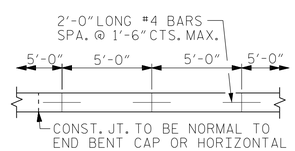

STRIP WIDTHS MAY VARY IN CURVED PORTION.

POURING DETAIL

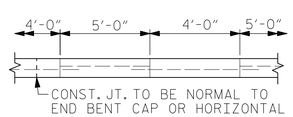

POUR A 4'-0" STRIP FIRST. STRIP WIDTHS MAY VARY IN CURVED PORTION.

OPTIONAL POURING DETAIL

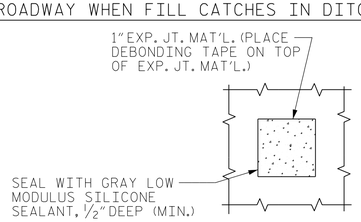

PLAN WHERE CONCRETE SLOPE PROTECTION MUST BE PLACED AROUND A BENT COLUMN

PROJECT NO. I-0914BA

VANCE COUNTY

STATION: 21+34.80-Y5SBL-POC

STATE OF NORTH CAROLINA
DEPARTMENT OF TRANSPORTATION
RALEIGH

STANDARD

SLOPE PROTECTION DETAILS

DocuSigned by: David Ruggles
C462768DF412422...
11/14/2014

NORTH CAROLINA PROFESSIONAL SEAL 11725 ENGINEER DAVID R. RUGGLES

DWG. 37 OF 40

Firm License No. C-1051
421 Fayetteville St,
Suite 400
Raleigh, NC 27601
T 919.380.8750
www.stewartinc.com

STEWART

REVISIONS							SHEET NO.
NO.	BY:	DATE:	NO.	BY:	DATE:		S-122
1			3				TOTAL SHEETS
2			4				177

ASSEMBLED BY :	P. JACOB	DATE :	08/14
CHECKED BY :	D. RUGGLES	DATE :	08/14
DRAWN BY : ELR 5/92	REV. 5/1/06	TLA/GM	
CHECKED BY : GRP 6/92	REV. 10/1/11	MAA/GM	
	REV. 12/21/11	MAA/GM	

11/14/2014 I-914BA SITE 3
...\403_037_I0914BA_SMU_SP01.dgn
USER:jloftus

STD. NO. SP1 (SHT 2)