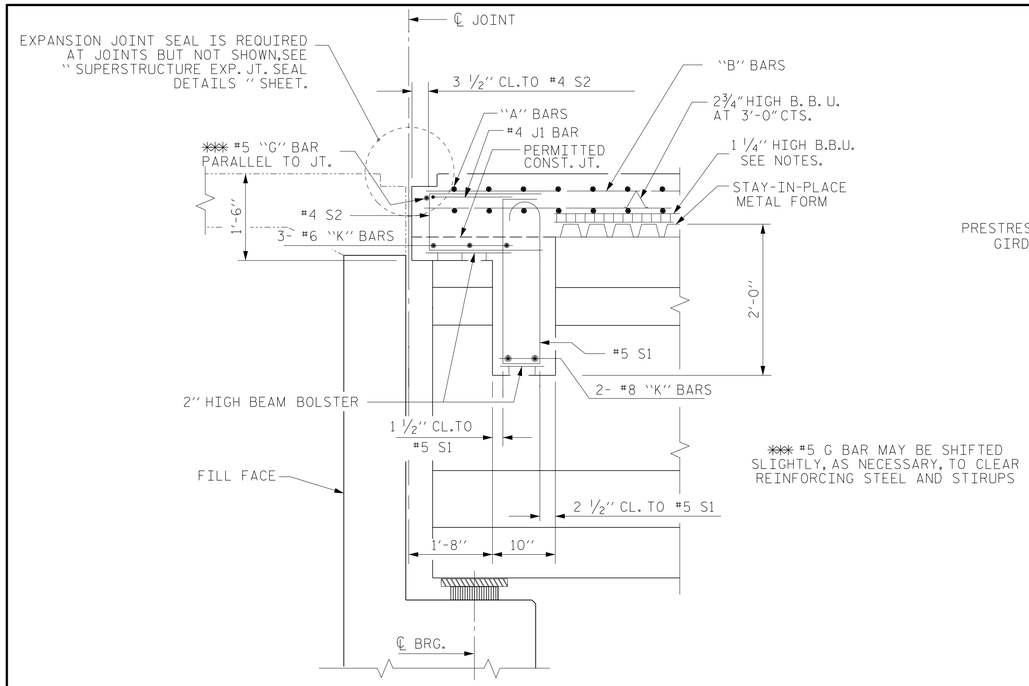

SECTION @ END BENT DIAPHRAGM

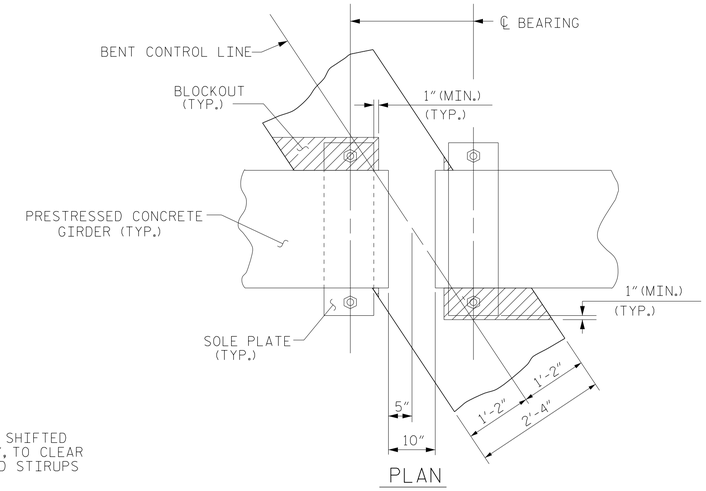

PLAN

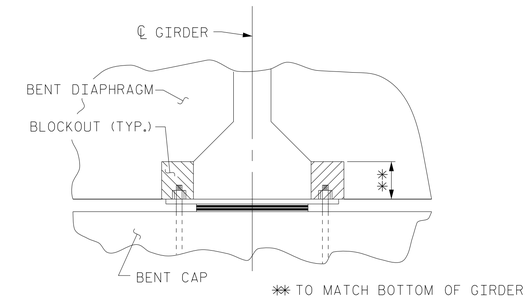

SECTION

BENT DIAPHRAGM BLOCK-OUT DETAIL

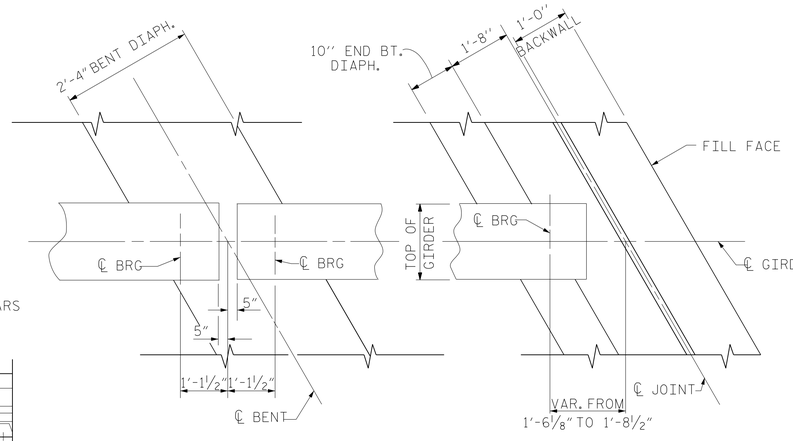

BENT DIAPHRAGM

END BENT DIAPHRAGM

PLAN

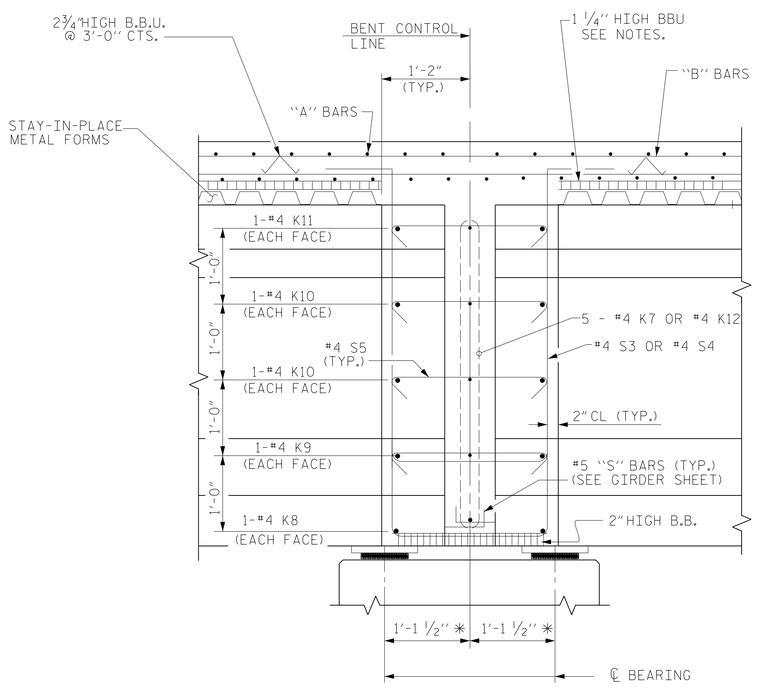

SECTION @ BENT 1 DIAPHRAGM

✱ MEASURED ALONG GIRDER

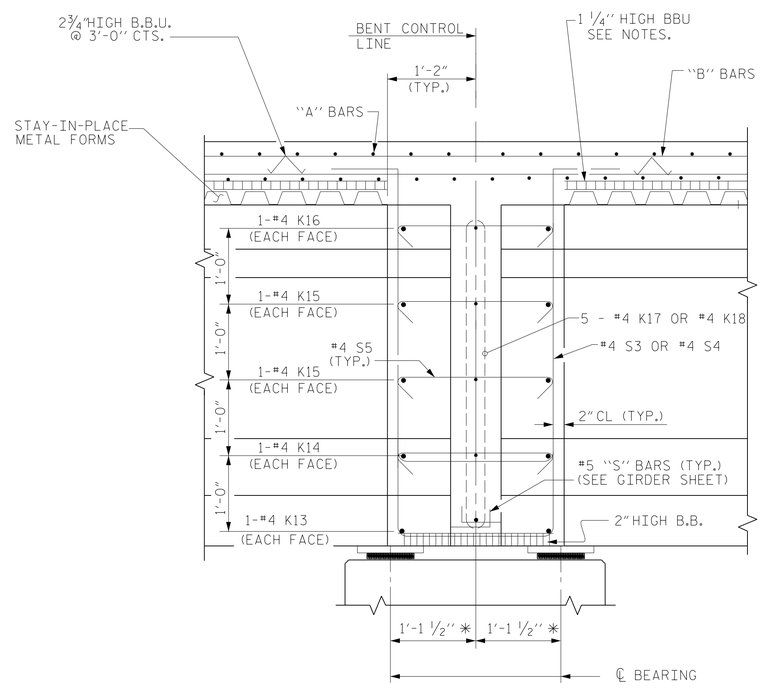

SECTION @ BENT 2 DIAPHRAGM

✱ MEASURED ALONG GIRDER

PROJECT NO. I-0914BA

VANCE COUNTY

STATION: 21+34.80-Y5SBL-POC

SHEET 2 OF 2

STATE OF NORTH CAROLINA
DEPARTMENT OF TRANSPORTATION
RALEIGH

TYPICAL SECTION DETAILS

NORTH CAROLINA PROFESSIONAL SEAL 11725 ENGINEER DAVID R. RUGGLES

DocuSigned by: David Ruggles C462768DF412422... 11/14/2014

DWG. 7 OF 40

STEWART

Firm License No. C-1051
421 Fayetteville St,
Suite 400
Raleigh, NC 27601
T 919.380.8750
www.stewartinc.com

REVISIONS						SHEET NO.
NO.	BY:	DATE:	NO.	BY:	DATE:	S-92
1			3			TOTAL SHEETS
2			4			177

DRAWN BY: P. JACOB	DATE : 02/14	
CHECKED BY: D. RUGGLES	DATE : 08/14	
DESIGN ENGINEER OF RECORD: D. RUGGLES	DATE : 08/14	

11/14/2014 I-914BA SITE 3
...\403_007_I0914BA_SMU_TS02.dgn
USER:jloftus