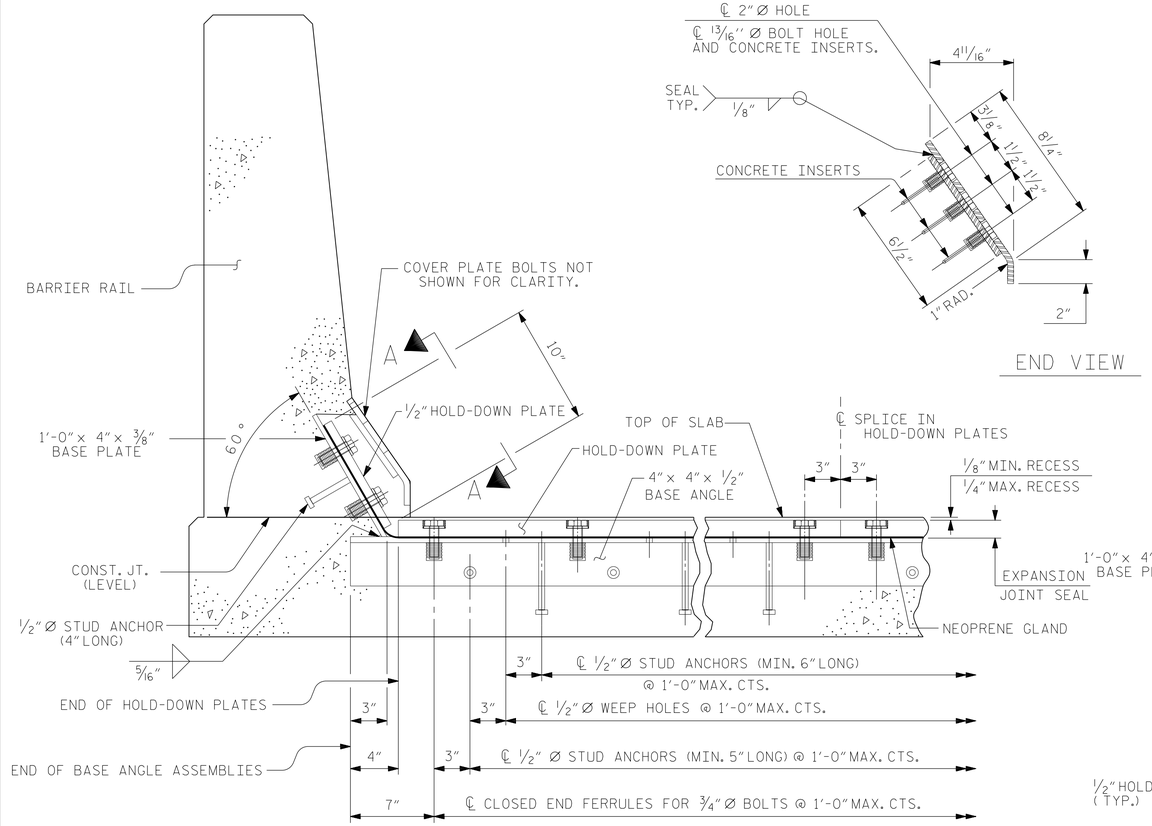

SECTION THRU RAIL NORMAL TO JOINT

END VIEW

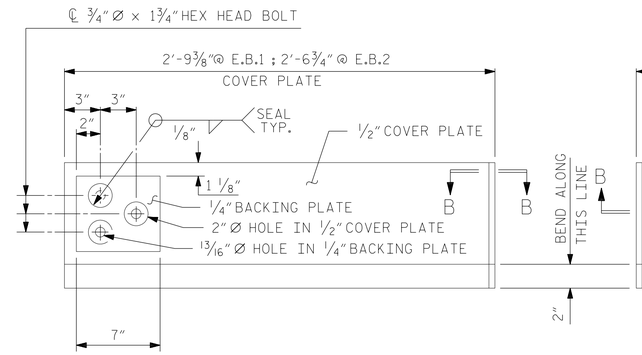

TYPE I - ELEVATION VIEW

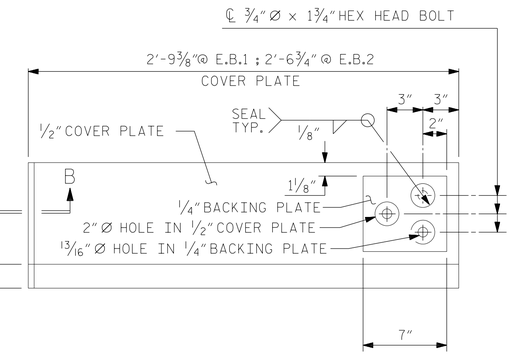

TYPE II - ELEVATION VIEW

COVER PLATE DETAILS

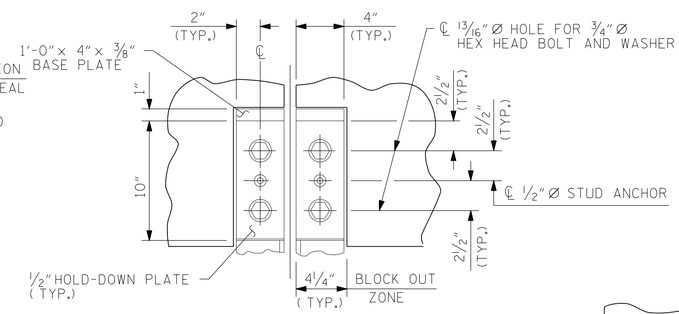

SECTION A - A

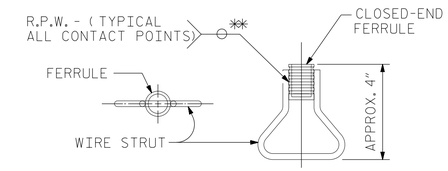

CONCRETE INSERT

** EACH WELDED ATTACHMENT OF WIRE TO FERRULE SHALL DEVELOP THE TENSILE STRENGTH OF THE WIRE.

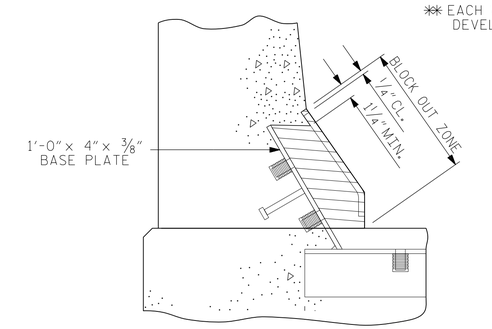

BLOCK OUT DETAIL

SEE " SECTION A - A " FOR OTHER DETAILS.

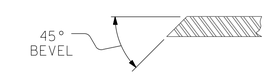

SECTION B - B

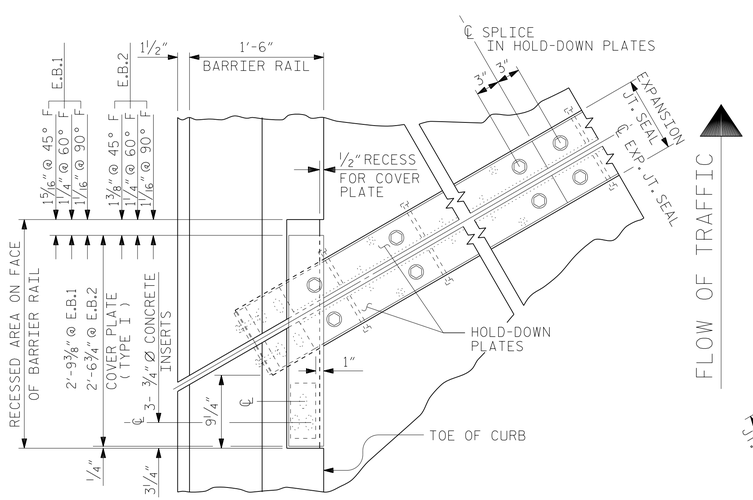

FLOW OF TRAFFIC

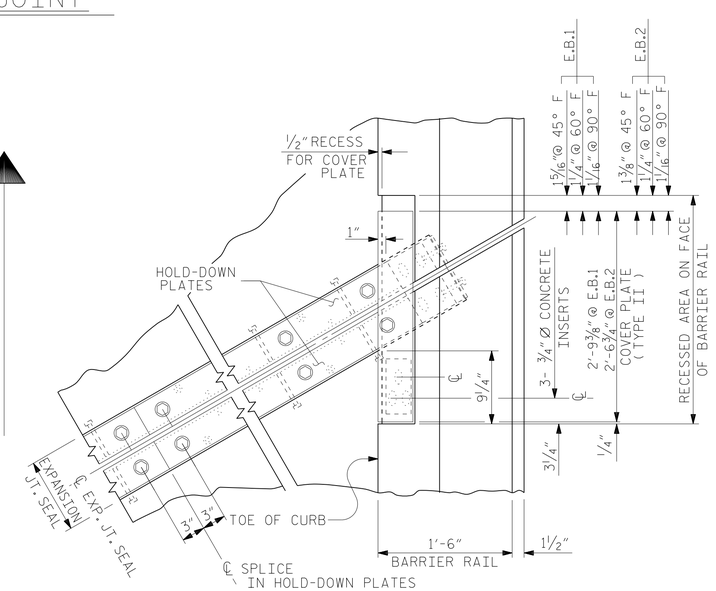

PLAN OF EXPANSION JOINT SEAL

PROJECT NO. I-0914BA

VANCE COUNTY

STATION: 21+34.80-Y5SBL-POC

SHEET 2 OF 2

STATE OF NORTH CAROLINA
DEPARTMENT OF TRANSPORTATION
RALEIGH

STANDARD
EXPANSION JOINT
SEAL DETAILS
FOR BARRIER RAIL

NORTH CAROLINA PROFESSIONAL SEAL 11725 ENGINEER DAVID R. RUGGLES

DocuSigned by: David Ruggles C462768DF412422... 11/14/2014

DWG. 23 OF 40

Firm License No. C-1051
421 Fayetteville St,
Suite 400
Raleigh, NC 27601
T 919.380.8750
www.stewartinc.com
STEWART

REVISIONS							SHEET NO.
NO.	BY:	DATE:	NO.	BY:	DATE:		S-108
1			3				TOTAL SHEETS
2			4				177

DRAWN BY:	H.ASSFOURA	DATE :	07/14
CHECKED BY:	P.JACOB	DATE :	08/14
DESIGN ENGINEER OF RECORD:	D.RUGGLES	DATE :	08/14

I-914BA SITE 3
11/14/2014
...\403_023_I0914BA_SMU_EJS02.dgn
USER:jloftus

******SYSTTUF******