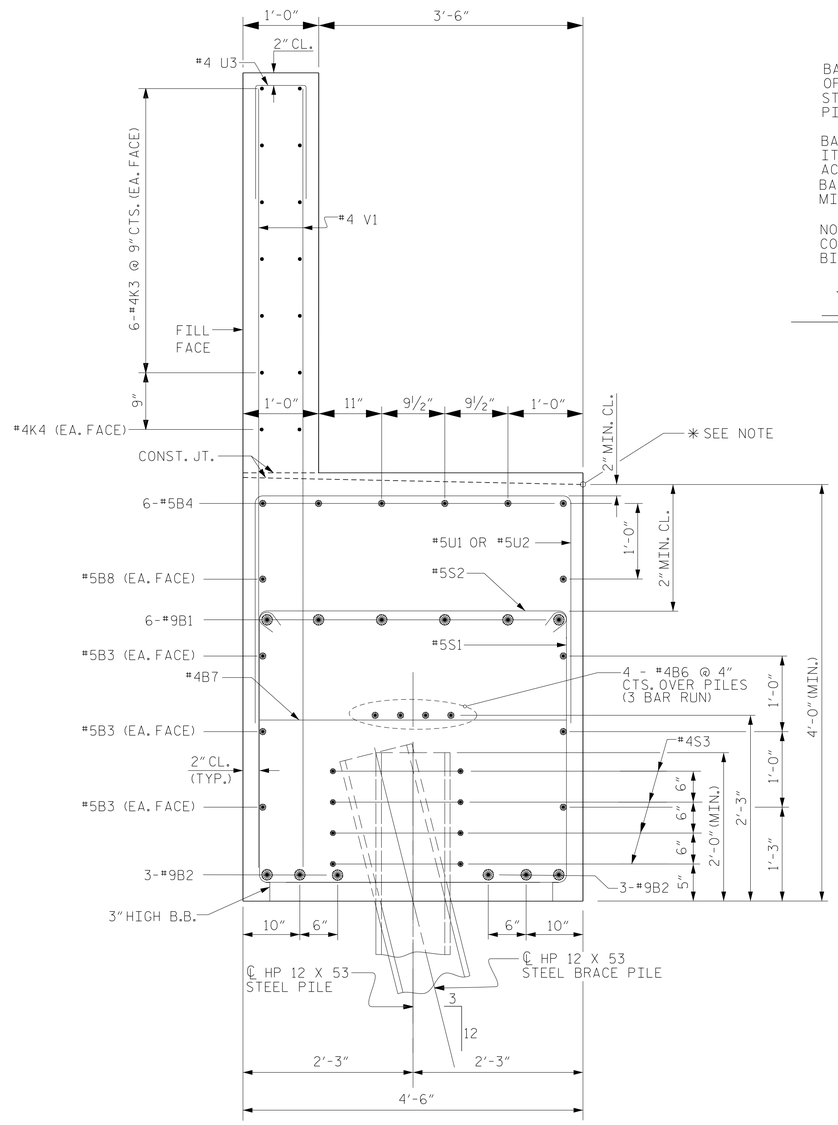

✱ NOTE: THE TOP SURFACE OF THE CAP EXCEPT THE BRIDGE SEAT BUILDUPS SHALL BE SLOPED TRANSVERSLY FROM THE FILL FACE TO THE BACK FACE AT THE RATE OF 2%.

SECTION A-A

(CONCRETE COLLAR NOT SHOWN FOR CLARITY. SEE "CORROSION PROTECTION FOR STEEL PILES DETAIL.")

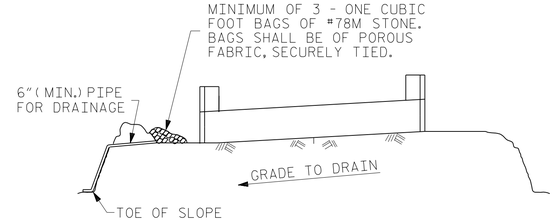

BAGGED STONE AND PIPE SHALL BE PLACED IMMEDIATELY AFTER COMPLETION OF END BENT EXCAVATION. PIPE MAY BE EITHER CONCRETE, CORRUGATED STEEL, CORRUGATED ALUMINUM ALLOY, OR CORRUGATED PLASTIC. PERFORATED PIPE WILL NOT BE ALLOWED.

BAGGED STONE SHALL REMAIN IN PLACE UNTIL THE ENGINEER DIRECTS THAT IT BE REMOVED. THE CONTRACTOR SHALL REMOVE AND DISPOSE OF SILT ACCUMULATIONS AT BAGGED STONE WHEN SO DIRECTED BY THE ENGINEER. BAGS SHALL BE REMOVED AND REPLACED WHENEVER THE ENGINEER DETERMINES THAT THEY HAVE DETERIORATED AND LOST THEIR EFFECTIVENESS.

NO SEPARATE PAYMENT WILL BE MADE FOR THIS WORK AND THE ENTIRE COST OF THIS WORK SHALL BE INCLUDED IN THE UNIT CONTRACT PRICE BID FOR THE SEVERAL PAY ITEMS.

TEMPORARY DRAINAGE AT END BENT

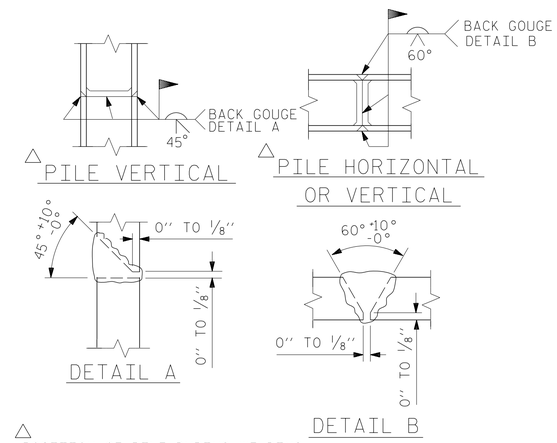

△ POSITION OF PILE DURING WELDING.

PILE SPLICE DETAILS

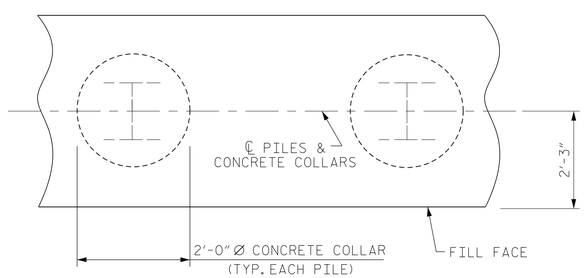

PLAN

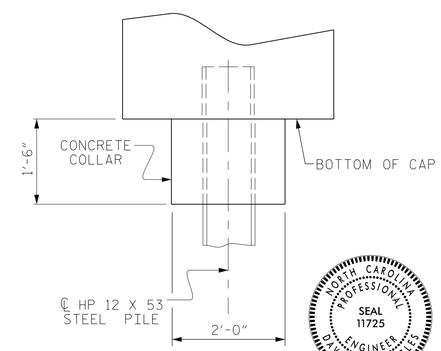

ELEVATION

CORROSION PROTECTION FOR STEEL PILES DETAIL

(END BENT No. 1 SHOWN, END BENT No. 2 SIMILAR BY ROTATION)

BAR TYPES

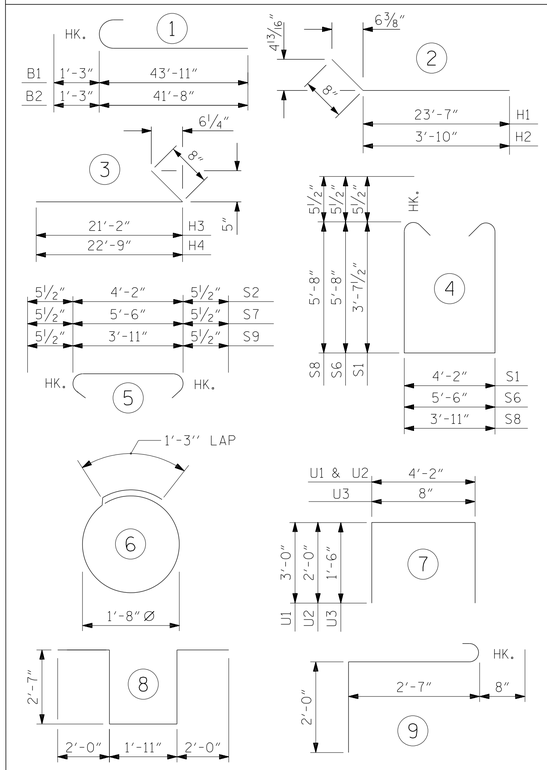

ALL BAR DIMENSIONS ARE OUT TO OUT.

CLASS A CONCRETE BREAKDOWN		
POUR #1	CAP, LOWER PART OF WINGS & COLLARS	72.9 C.Y.
POUR #2	BACKWALL & UPPER PART OF WINGS	24.0 C.Y.
TOTAL CLASS A CONCRETE		96.9 C.Y.

HP 12 X 53 STEEL PILES	
NO: 11	LIN. FT.= 550

BILL OF MATERIAL FOR ONE END BENT

BAR	NO.	SIZE	TYPE	LENGTH	WEIGHT
B1	12	#9	1	45'-2"	1843
B2	12	#9	1	42'-11"	1751
B3	12	#5	STR	40'-0"	501
B4	24	#5	STR	16'-0"	401
B5	6	#5	STR	8'-4"	52
B6	12	#4	STR	26'-8"	214
B7	18	#4	STR	4'-2"	50
B8	2	#5	STR	13'-0"	27
H1	34	#5	2	24'-3"	860
H2	2	#5	2	4'-6"	9
H3	16	#5	3	21'-10"	364
H4	16	#5	3	23'-5"	391
K1	4	#4	STR	4'-3"	11
K2	4	#4	STR	3'-10"	10
K3	36	#4	STR	27'-1"	651
K4	2	#4	STR	9'-1"	12
K5	2	#4	STR	9'-6"	13
K6	2	#4	STR	8'-9"	12
S1	74	#5	4	12'-4"	952
S2	74	#5	5	5'-1"	392
S3	36	#4	6	6'-6"	156
S4	6	#6	8	11'-1"	100
S5	6	#6	9	5'-3"	47
S6	1	#5	4	17'-9"	19
S7	1	#5	5	6'-5"	7
S8	1	#5	4	16'-2"	17
S9	1	#5	5	4'-10"	5
U1	30	#5	7	10'-2"	318
U2	14	#5	7	8'-2"	119
U3	66	#4	7	3'-8"	162
V1	134	#5	STR	9'-6"	1328
V2	9	#5	STR	11'-5"	107
V3	14	#5	STR	10'-8"	156
V4	8	#5	STR	11'-4"	95
V5	8	#5	STR	11'-2"	93
V6	8	#5	STR	11'-0"	92
V7	8	#5	STR	10'-9"	90
V8	8	#5	STR	10'-7"	88
V9	8	#5	STR	10'-5"	87
V10	8	#5	STR	10'-7"	88
V11	8	#5	STR	10'-5"	87
V12	8	#5	STR	10'-3"	86
V13	8	#5	STR	10'-1"	84
V14	8	#5	STR	9'-10"	82
REINFORCING STEEL (FOR ONE END BENT)					12029 LBS.

PROJECT NO. I-0914BA

VANCE COUNTY

STATION: 21+34.80-Y5SBL-POC

SHEET 3 OF 3

STATE OF NORTH CAROLINA
DEPARTMENT OF TRANSPORTATION
RALEIGH

SUBSTRUCTURE
END BENT No.1
DETAILS

NORTH CAROLINA PROFESSIONAL SEAL 11725 ENGINEER DAVID R. RUGGLES

DocuSigned by: David Ruggles 11/14/2014
C462768DF412422...

DWG. 28 OF 40

Firm License No. C-1051
421 Fayetteville St,
Suite 400
Raleigh, NC 27601
T 919.380.8750
www.stewartinc.com
STEWART

REVISIONS							SHEET NO.
NO.	BY:	DATE:	NO.	BY:	DATE:		S-113
1			3				TOTAL SHEETS
2			4				177

DRAWN BY:	J. LOFTUS	DATE :	07/14
CHECKED BY:	D. RUGGLES	DATE :	08/14
DESIGN ENGINEER OF RECORD:	D. RUGGLES	DATE :	08/14

I-914BA SITE 3
11/14/2014
...\403_028_I0914BA_SMU_1EB03.dgn
USER:jloftus