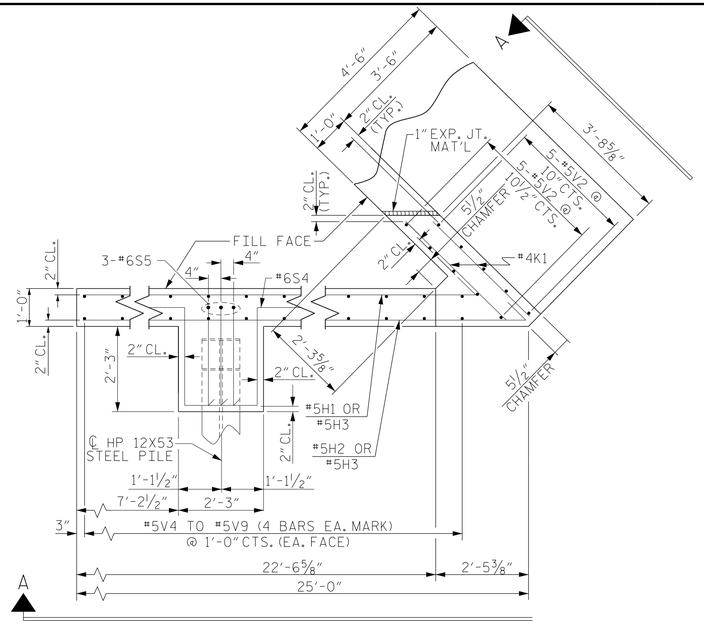

PLAN OF WING (W3)

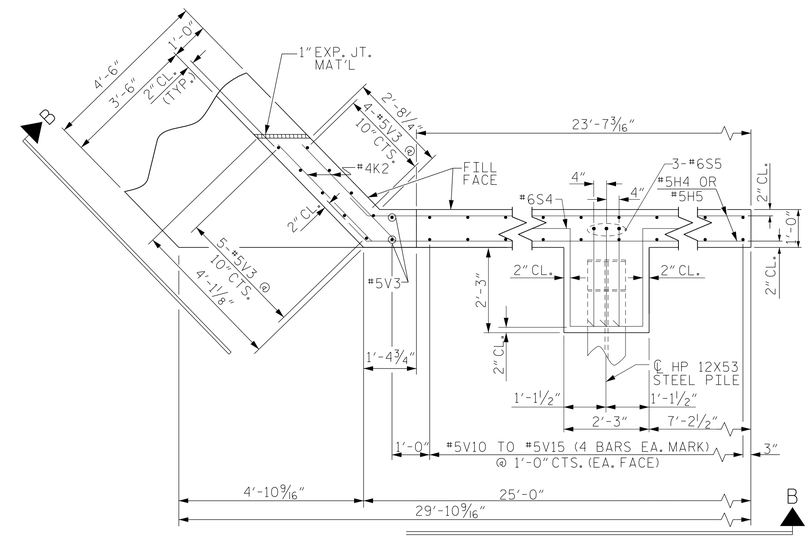

PLAN OF WING (W4)

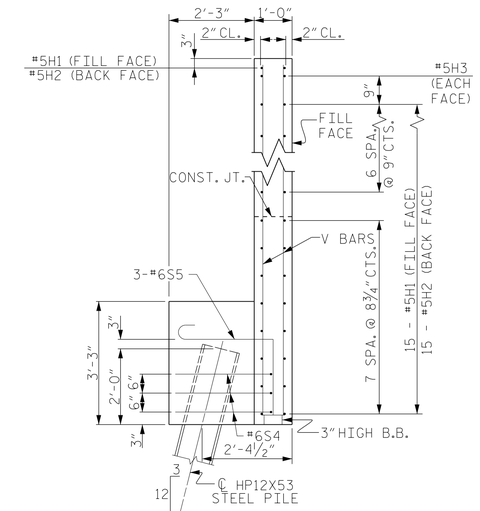

SECTION X-X

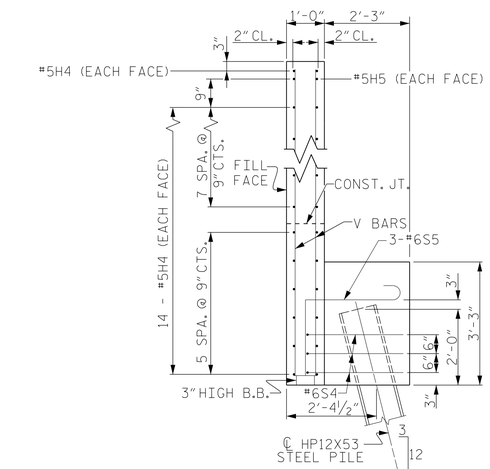

SECTION Y-Y

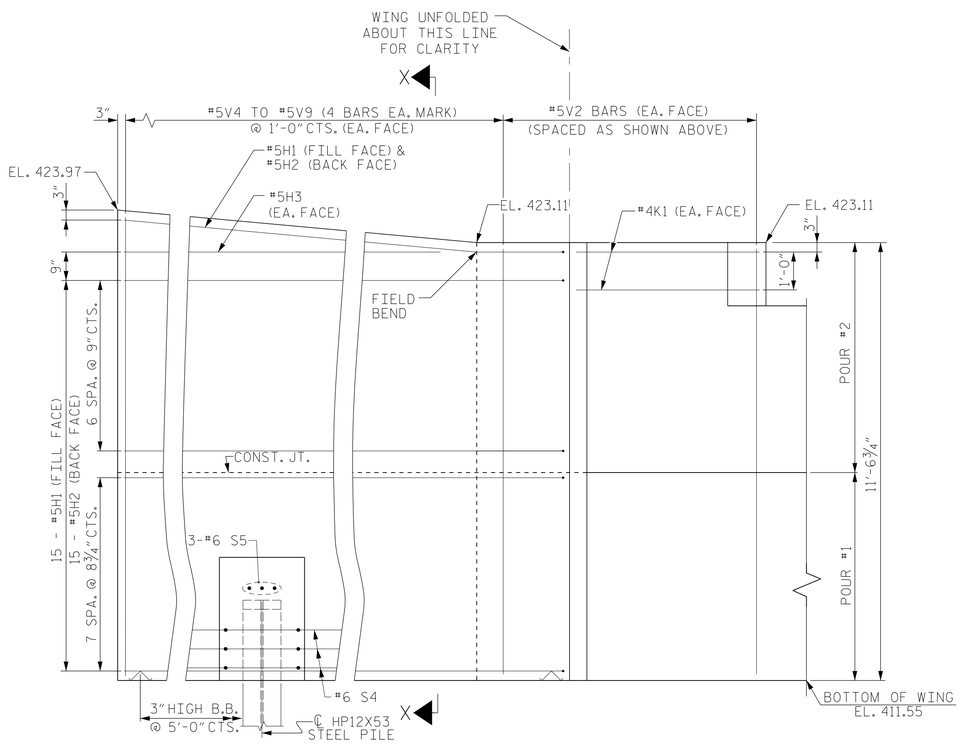

VIEW A-A

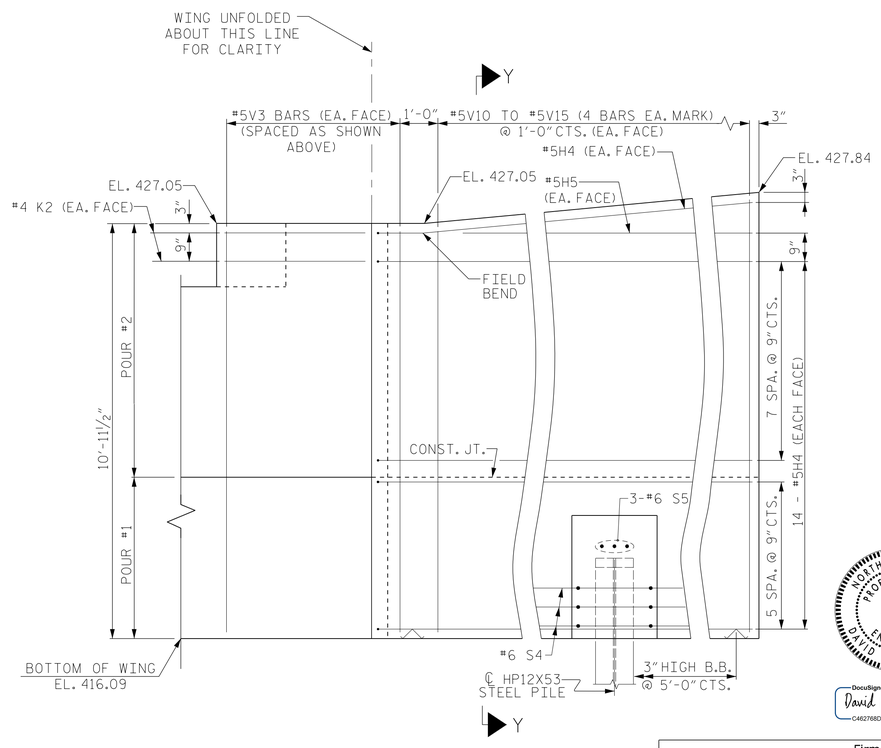

VIEW B-B

WING ELEVATION DETAILS

PROJECT NO. I-0914BA

VANCE COUNTY

STATION: 21+34.80-Y5SBL-POC

SHEET 2 OF 3

STATE OF NORTH CAROLINA
DEPARTMENT OF TRANSPORTATION
RALEIGH

SUBSTRUCTURE
END BENT No.2
WING DETAILS

NORTH CAROLINA PROFESSIONAL SEAL 11725 ENGINEER DAVID R. RUGGLES

DocuSigned by: David Ruggles C4627680F412422... 11/14/2014

DWG. 34 OF 40

Firm License No. C-1051
421 Fayetteville St,
Suite 400
Raleigh, NC 27601
T 919.380.8750
www.stewartinc.com
STEWART

REVISIONS						SHEET NO.
NO.	BY:	DATE:	NO.	BY:	DATE:	S-119
1			3			TOTAL SHEETS
2			4			177

DRAWN BY:	J. LOFTUS	DATE :	07/14
CHECKED BY:	D. RUGGLES	DATE :	08/14
DESIGN ENGINEER OF RECORD:	D. RUGGLES	DATE :	08/14

11/14/2014
...\403_034_I0914BA_SMU_2EB02.dgn
USER:jloftus
I-9148A SITE 3