BILL OF MATERIAL
FOR END BENT NO. 1

BAR	NO.	SIZE	TYPE	LENGTH	WEIGHT
B1	14	#11	1	47'-7"	3539
B2	12	#5	STR	40'-9"	510
B3	19	#4	STR	4'-5"	56
B4	24	#4	STR	27'-9"	445
B5	25	#4	STR	3'-8"	61
B6	14	#11	1	45'-8"	3397
H1	4	#4	4	17'-7"	47
H101	1	#4	4	17'-3"	12
H102				16'-3"	11
H103				15'-3"	10
H104				14'-3"	10
H105				13'-3"	9
H106				12'-3"	8
H107				11'-9"	8
H108				10'-9"	7
H109				9'-9"	7
H110				8'-9"	6
H111	1	#4	4	7'-9"	5
H2	4	#4	4	16'-9"	45
H201	1	#4	4	16'-5"	11
H202				15'-5"	10
H203				14'-5"	10
H204				13'-5"	9
H205				12'-5"	8
H206				11'-5"	8
H207				10'-10"	7
H208				9'-10"	7
H209				8'-11	6
H210				7'-11"	5
H211	1	#4	4	6'-11"	5
H3	4	#4	3	15'-11"	43
H301	1	#4	3	15'-7"	10
H302				14'-8"	10
H303				13'-9"	9
H304				12'-9"	9
H305				11'-10"	8
H306				10'-11"	7
H307				9'-10"	7
H308				8'-10"	6
H309				7'-11"	5
H310				7'-0"	5
H311	1	#4	3	6'-1"	4
H4	4	#4	3	16'-3"	43
H401	1	#4	3	15'-11"	11
H402				15'-0"	10
H403				14'-1"	9
H404				13'-2"	9
H405				12'-2"	8
H406				11'-3"	8
H407				10'-2"	7
H408	1	#4	3	9'-3"	6

BAR	NO.	SIZE	TYPE	LENGTH	WEIGHT
H409	1	#4	3	8'-3"	6
H410	1	#4	3	7'-4"	5
H411	1	#4	3	6'-5"	4
K1	54	#4	STR	27'-9"	1001
K2	4	#4	STR	6'-10"	18
K3	4	#4	STR	4'-9"	13
S1	62	#5	6	13'-6"	873
S2	62	#5	7	5'-4"	345
S3	72	#5	6	12'-1"	907
S4	72	#5	7	3'-11"	294
S5	50	#5	6	10'-8"	556
S6	50	#5	7	2'-6"	130
S7	100	#4	10	8'-1"	540
S8	6	#6	8	5'-6"	50
S9	4	#6	9	9'-11"	60
S10	2	#6	9	8'-11"	27
S11	2	#5	6	15'-4"	32
S12	2	#5	7	7'-2"	15
U1	98	#4	2	4'-8"	305
U2	20	#4	2	7'-5"	99
U3	8	#4	5	9'-0"	48
U4	8	#4	2	7'-0"	37
V1	196	#6	STR	9'-3"	2723
V100	28	#5	STR	14'-1"	411
V101	2			13'-3"	28
V102	2			12'-3"	26
V103	2			11'-2"	23
V104	2			10'-1"	21
V105	2			9'-1"	19
V106	2			8'-0"	17
V107	2			7'-0"	15
V108	2			5'-11"	12
V109	2			4'-10"	10
V110	2	#5	STR	3'-10"	8
V200	22	#5	STR	13'-9"	316
V201	2			13'-0"	27
V202	2			12'-0"	25
V203	2			11'-0"	23
V204	2			9'-11"	21
V205	2			8'-11"	19
V206	2			7'-11"	17
V207	2			6'-11"	14
V208	2			5'-10"	12
V209	2			4'-10"	10
V210	2	#5	STR	3'-10"	8

REINFORCING STEEL
(FOR END BENT NO. 1) 17,683 LBS.

BAR TYPES

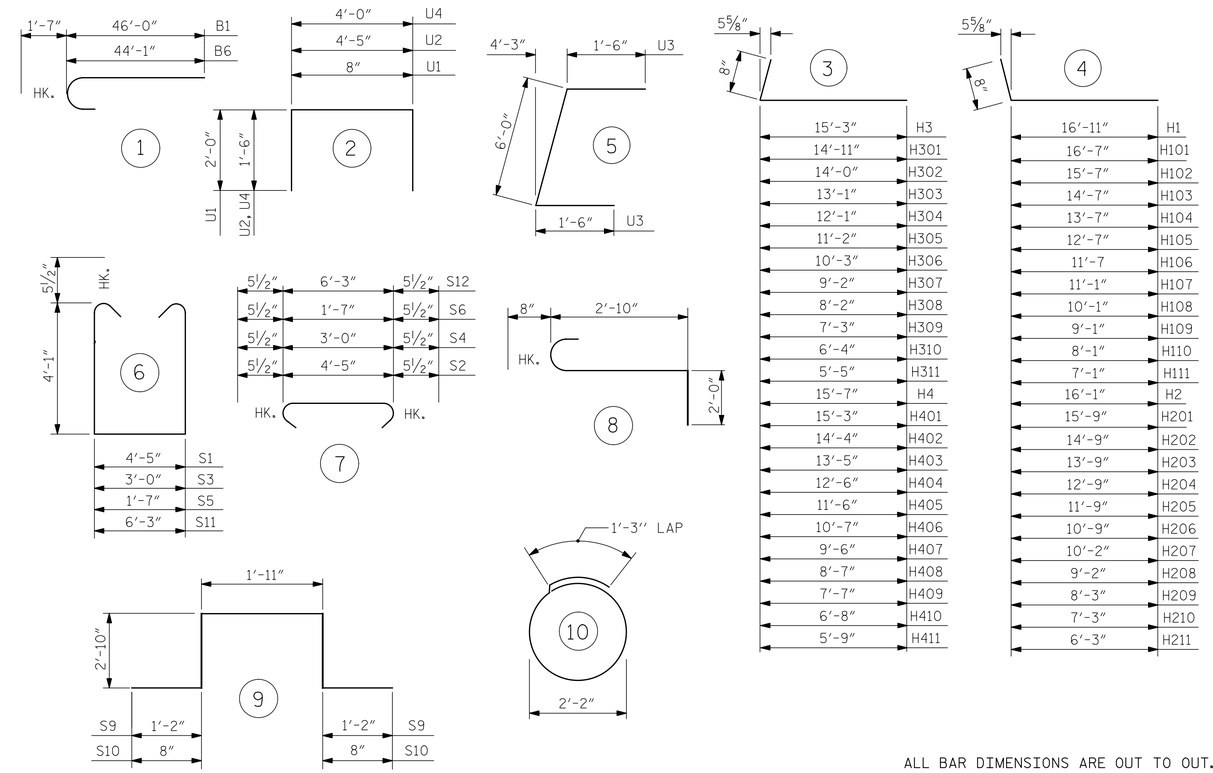

ALL BAR DIMENSIONS ARE OUT TO OUT.

CLASS A CONCRETE BREAKDOWN (FOR END BENT NO. 1)

POUR #1	CAP, LOWER PART OF WINGS, AND CONCRETE COLLARS	71.0 C.Y.
POUR #2	BACKWALL AND UPPER PART OF WINGS	38.5 C.Y.
TOTAL CLASS A CONCRETE		109.5 C.Y.

PILE EXCAVATION

IN SOIL (L.F.)	NOT IN SOIL (L.F.)
112	48

STEEL PILE POINTS

NO. REQ'D.: 11

HP 14X73 STEEL PILES

*NO.: 27 LIN. FT.: 338

*INCLUDES WINGWALL PILES

NOTES:

1) STEEL PILE POINTS WITH TEETH ARE REQUIRED FOR PILE NO. 1, 3, 5, 7, 9 AND 11 AT END BENT NO. 1. FOR STEEL PILE POINTS, SEE SECTION 450 OF THE STANDARD SPECIFICATIONS.

2) STEEL PILE POINTS ARE REQUIRED FOR PILE NO. 2, 4, 6, 8 AND 10 AT END BENT NO. 1. FOR STEEL PILE POINTS, SEE SECTION 450 OF THE STANDARD SPECIFICATIONS.

3) PILE EXCAVATION IS REQUIRED TO INSTALL PILE NO. 12 THROUGH PILE NO. 27 AT END BENT NO. 1. EXCAVATE HOLES AT PILE LOCATIONS TO 10 FT. BELOW THE BOTTOM of CAP OR WING WALL ELEVATION AT EACH PILE LOCATION. FOR PILE EXCAVATION, SEE SECTION 450 OF THE STANDARD SPECIFICATIONS.

NORTH CAROLINA PROFESSIONAL SEAL 17 ENGINEER HARDEN L. WILKS COUNTY OF CUMBERLAND
DocuSigned by: Harden Wilks
7/14/2014

V&M Vaughn & Melton Consulting Engineers
Charlotte, North Carolina 704-357-0486
Tri-Cities, Tennessee 423-467-8401
Knoxville, Tennessee 865-546-5800
Asheville, North Carolina 828-253-2796
Middlesboro, Kentucky 606-248-6600
Spartanburg, South Carolina 864-574-4775
Copyright © 2006 Vaughn & Melton, Inc. All Rights Reserved

PROJECT NO. I-0914BA
VANCE COUNTY
STATION: STA. 177+61.31 -NBL-
STA. 22+31.77 -Y2SBL-
SHEET 5 OF 5

STATE OF NORTH CAROLINA
DEPARTMENT OF TRANSPORTATION
RALEIGH

END BENT NO. 1

SHEET 28 OF 37

DWN. BY: MAF DATE: 2/14
CHKD. BY: HLW DATE: 2/14
DES. EGR. OF RECORD: RTS DATE: 2/14

REVISIONS					
NO.	BY:	DATE:	NO.	BY:	DATE:
1			3		
2			4		

SHEET NO. S-76
TOTAL SHEETS 177