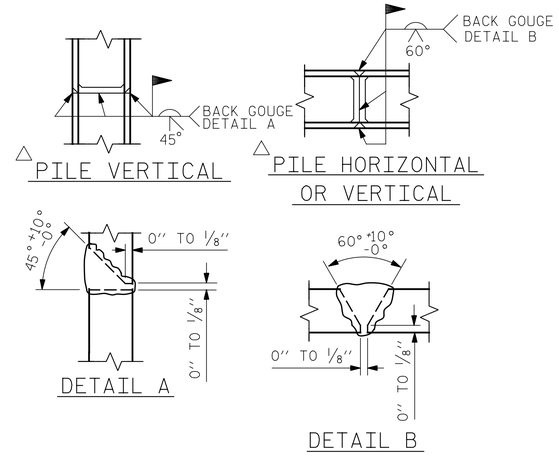

PILE SPLICE DETAILS

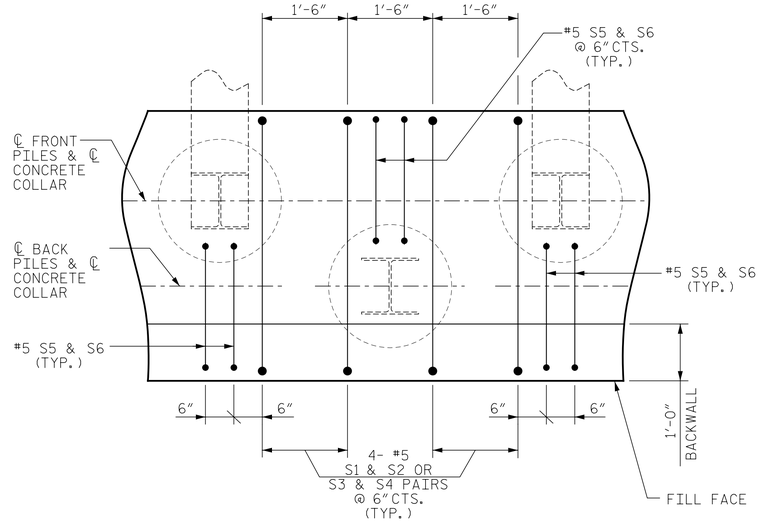

DETAIL 'C'

STIRRUP LAYOUT

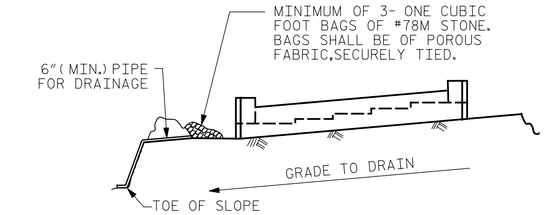

BAGGED STONE AND PIPE SHALL BE PLACED IMMEDIATELY AFTER COMPLETION OF END BENT EXCAVATION. PIPE MAY BE EITHER CONCRETE, CORRUGATED STEEL, CORRUGATED ALUMINUM ALLOY, OR CORRUGATED PLASTIC. PERFORATED PIPE WILL NOT BE ALLOWED.

BAGGED STONE SHALL REMAIN IN PLACE UNTIL THE ENGINEER DIRECTS THAT IT BE REMOVED. THE CONTRACTOR SHALL REMOVE AND DISPOSE OF SILT ACCUMULATIONS AT BAGGED STONE WHEN SO DIRECTED BY THE ENGINEER. BAGS SHALL BE REMOVED AND REPLACED WHENEVER THE ENGINEER DETERMINES THAT THEY HAVE DETERIORATED AND LOST THEIR EFFECTIVENESS.

NO SEPARATE PAYMENT WILL BE MADE FOR THIS WORK AND THE ENTIRE COST OF THIS WORK SHALL BE INCLUDED IN THE UNIT CONTRACT PRICE BID FOR THE SEVERAL PAY ITEMS.

TEMPORARY DRAINAGE AT END BENT

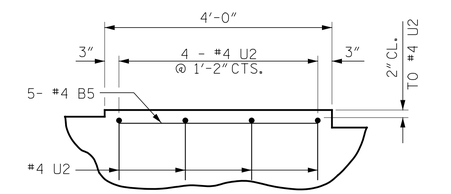

DETAIL "B"

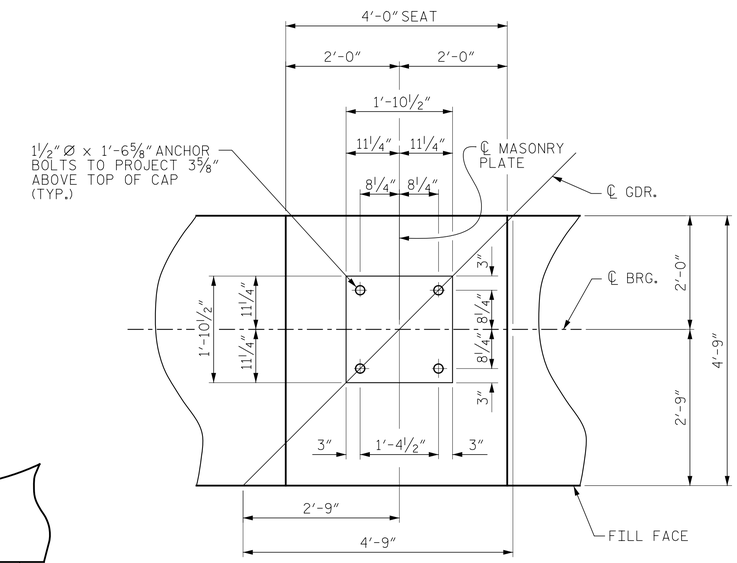

DETAIL 'A'

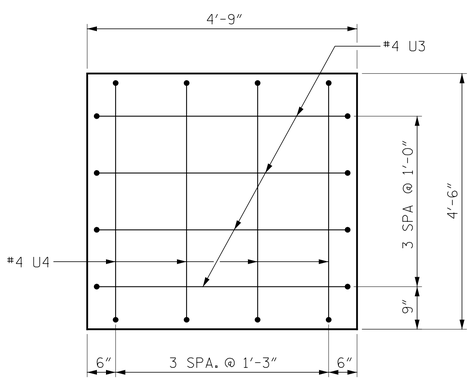

VIEW D-D

LEFT END SHOWN. RIGHT END SIMILAR.

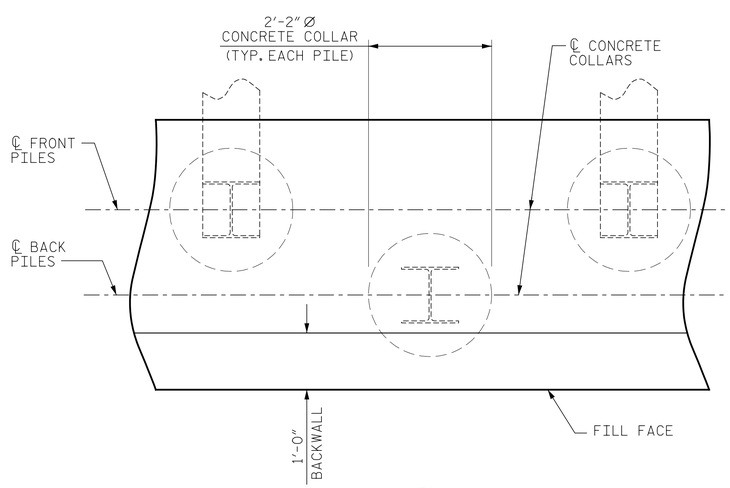

PLAN

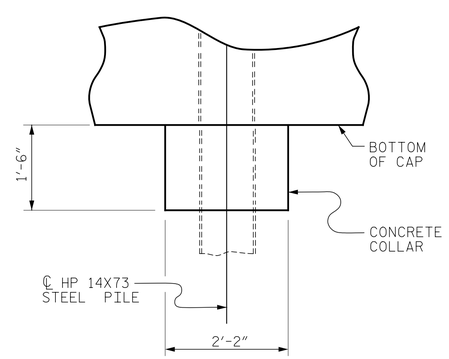

ELEVATION

CORROSION PROTECTION FOR STEEL PILES DETAIL

PROJECT NO. I-0914BA

VANCE COUNTY

STATION: 177+61.31 -NBL-
22+31.77 -Y2SBL-

SHEET 4 OF 5

STATE OF NORTH CAROLINA
DEPARTMENT OF TRANSPORTATION
RALEIGH

END BENT NO. 1

NORTH CAROLINA PROFESSIONAL SEAL 20703 ENGINEER HARRY L. WILLIS JR.

DocuSigned by: Harry Willis
CC2C7A7CE02C4D1...
7/14/2014

V&M Vaughn & Melton Consulting Engineers
Asheville, North Carolina 828-253-2796
Charlotte, North Carolina 704-357-0488
Tri-Cities, Tennessee 423-467-840
Knoxville, Tennessee 865-546-1800
Middlesboro, Kentucky 606-248-6600
Spartanburg, South Carolina 864-574-4775
Copyright © 2006 Vaughn & Melton, Inc. All Rights Reserved

SHEET 27 OF 37		REVISIONS						SHEET NO.
DWN. BY: MAF	DATE: 5/14	NO.	BY:	DATE:	NO.	BY:	DATE:	S-75
CHKD. BY: HLW	DATE: 5/14	1			3			TOTAL SHEETS
DES. EGR. OF RECORD: RTS	DATE: 5/14	2			4			177