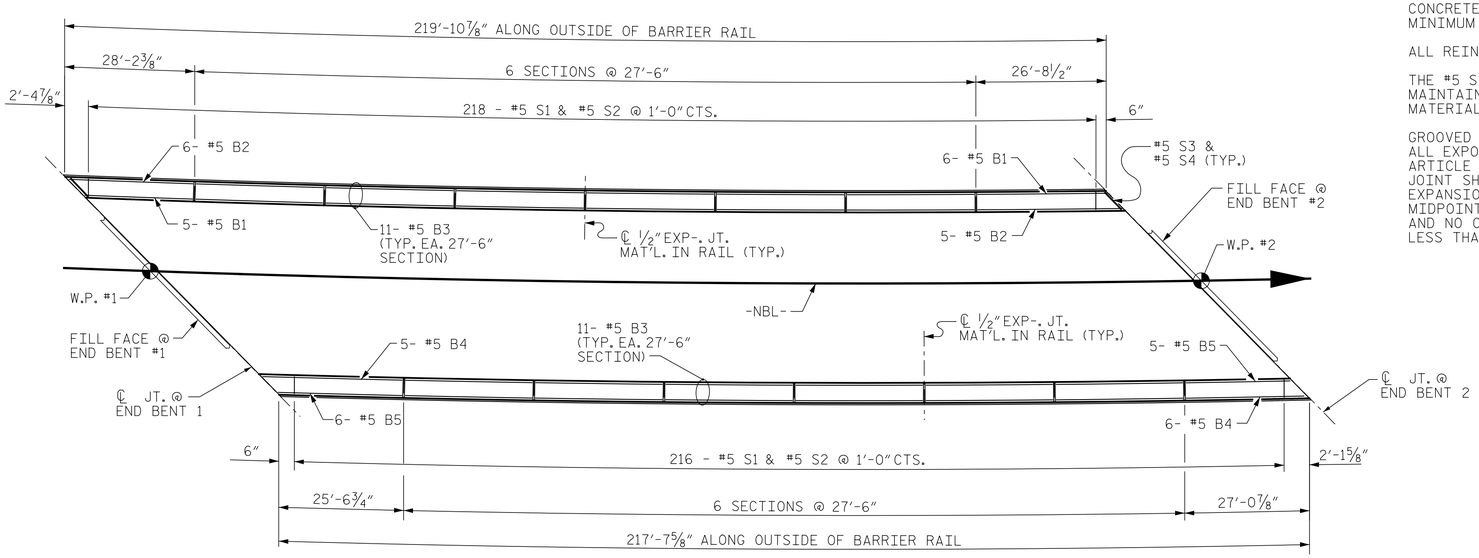

PLAN OF BARRIER RAIL

NOTE: DIMENSIONS MEASURED ALONG BACK FACE OF BARRIER RAIL.

NOTES

THE BARRIER RAIL IN THE SPAN SHALL NOT BE CAST UNTIL ALL SLAB CONCRETE IN THAT SPAN HAS BEEN CAST AND HAS REACHED A MINIMUM COMPRESSIVE STRENGTH OF 3,000 PSI.

ALL REINFORCING STEEL IN BARRIER RAILS SHALL BE EPOXY COATED.

THE #5 S1 & #5 S2 BARS MAY BE SHIFTED SLIGHTLY IN ORDER TO MAINTAIN A 2" MAXIMUM CLEARANCE TO ½" EXPANSION JOINT MATERIAL IN THE BARRIER RAIL.

GROOVED CONTRACTION JOINTS, ½" IN DEPTH, SHALL BE TOOLED IN ALL EXPOSED FACES OF THE BARRIER RAIL AND IN ACCORDANCE WITH ARTICLE 825-10(B) OF THE STANDARD SPECIFICATIONS. THE CONTRACTION JOINT SHALL BE LOCATED AT EACH THIRD POINT BETWEEN BARRIER RAIL EXPANSION JOINTS. ONLY ONE CONTRACTION JOINT IS REQUIRED AT MIDPOINT OF BARRIER RAIL SEGMENTS LESS THAN 20 FEET IN LENGTH AND NO CONTRACTION JOINTS ARE REQUIRED FOR THOSE SEGMENTS LESS THAN 10 FEET IN LENGTH.

BAR TYPES

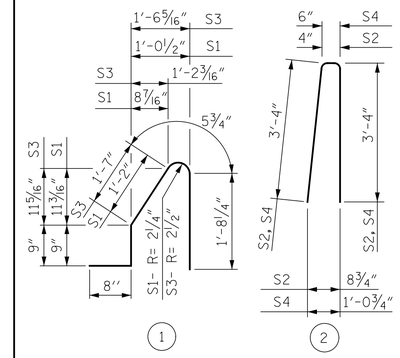

ALL BAR DIMENSIONS ARE OUT TO OUT.

BILL OF MATERIAL

FOR CONCRETE BARRIER RAIL ONLY

BAR	NO.	SIZE	TYPE	LENGTH	WEIGHT
* B1	11	#5	STR	26'-1"	299
* B2	11	#5	STR	27'-6"	316
* B3	132	#5	STR	27'-0"	3717
* B4	11	#5	STR	26'-4"	302
* B5	11	#5	STR	25'-0"	287
* S1	434	#5	1	4'-9"	2150
* S2	434	#5	2	7'-0"	3169
* S3	4	#5	1	5'-2"	22
* S4	4	#5	2	7'-2"	30

* EPOXY COATED REINFORCING STEEL 10,292 LBS.

CLASS AA CONCRETE 59.5 CU. YDS.

CONCRETE BARRIER RAIL
SUPERSTRUCTURE 437.5 LIN. FT.
● APPROACH SLABS 40.0 LIN. FT.
TOTAL 477.5 LIN. FT.

● FOR EPOXY COATED REINFORCING STEEL AND CLASS AA CONCRETE IN THE BARRIER RAIL ON APPROACH SLABS, SEE "BRIDGE APPROACH SLAB DETAILS" SHEET.

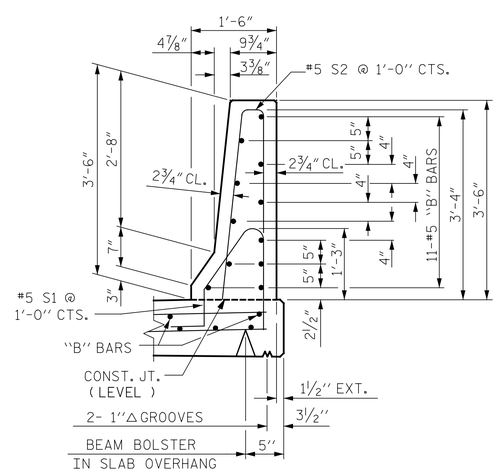

SECTION THRU RAIL

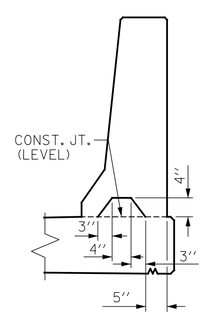

SECTION S-S

AT DAM IN OPEN JOINT
(THIS IS TO BE USED ONLY WHEN SLIP FORM IS USED)

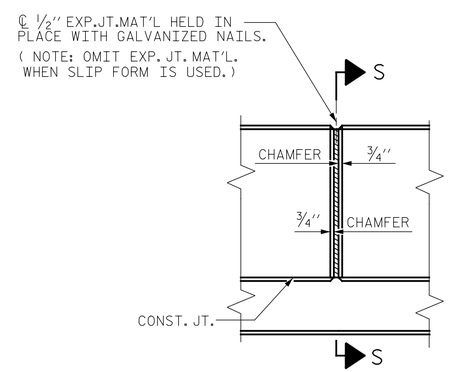

ELEVATION AT EXPANSION JOINTS

BARRIER RAIL DETAILS

PROJECT NO. I-0914BA

VANCE COUNTY

STATION: 177+61.31 -NBL-
22+31.77 -Y2SBL-

STATE OF NORTH CAROLINA
DEPARTMENT OF TRANSPORTATION
RALEIGH

STANDARD

CONCRETE BARRIER RAIL

NORTH CAROLINA PROFESSIONAL SEAL ENGINEER L. HARDAY WILLIS 042361 DocuSigned by: Harday Willis 7/14/2014

REVISIONS						SHEET NO.
NO.	BY:	DATE:	NO.	BY:	DATE:	S-68
1			3			TOTAL SHEETS
2			4			177

ASSEMBLED BY : MAF		DATE : 5/14	
CHECKED BY : HLW		DATE : 5/14	
DRAWN BY : ARB 5/87	REV. 10/1/11	MAA/GM	
CHECKED BY : SJD 9/87	REV. 7/12	MAA/GM	
	REV. 6/13	MAA/GM	

SHEET 20 OF 37

STD. NO. CBR1

$$$$$$SYSTIME$$$$$
$$$$$$$$$$$$$$$$$$$$$$$$DGN$$$$$$$$$$$$$$$$$$$$$$$$
$$$$USERNAME$$$$