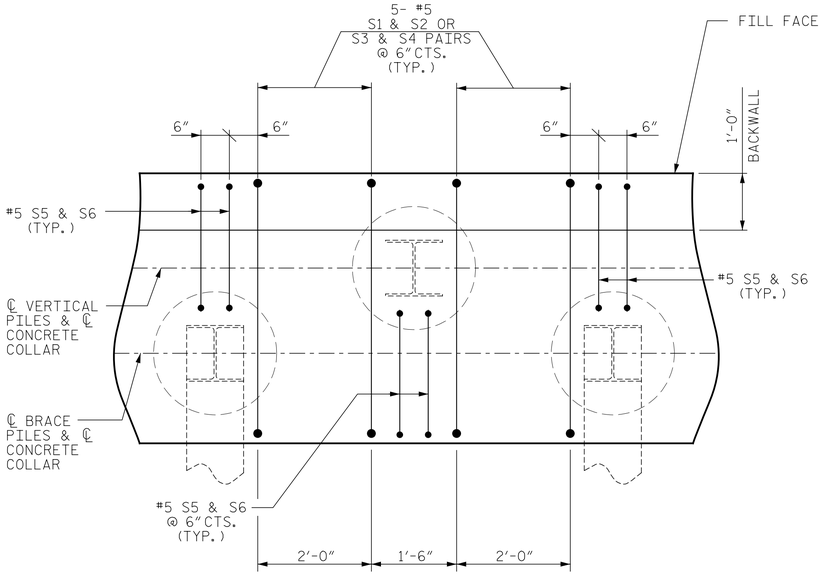

DETAIL 'C'

STIRRUP LAYOUT

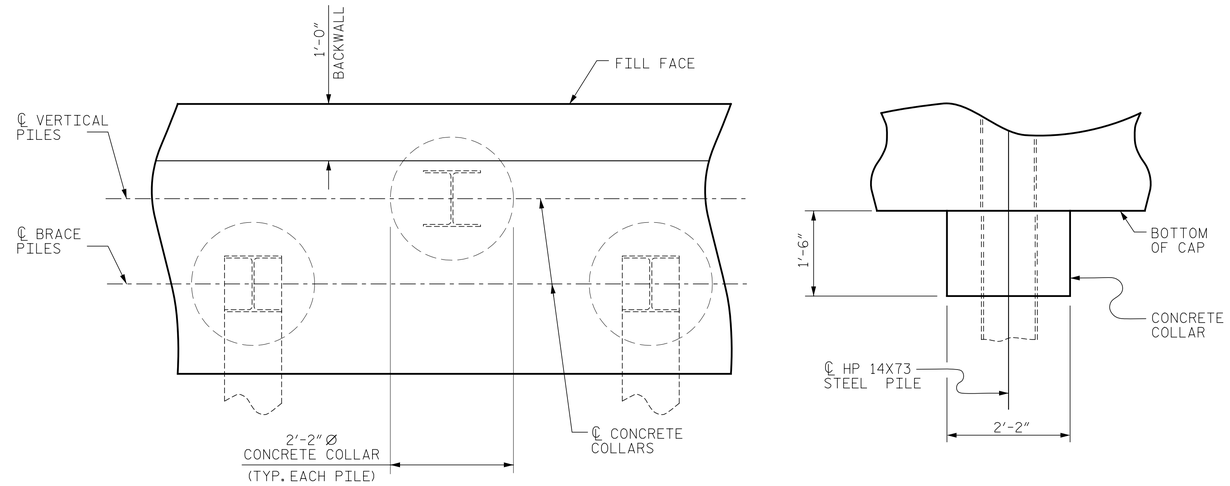

PLAN

ELEVATION

CORROSION PROTECTION FOR STEEL PILES DETAIL

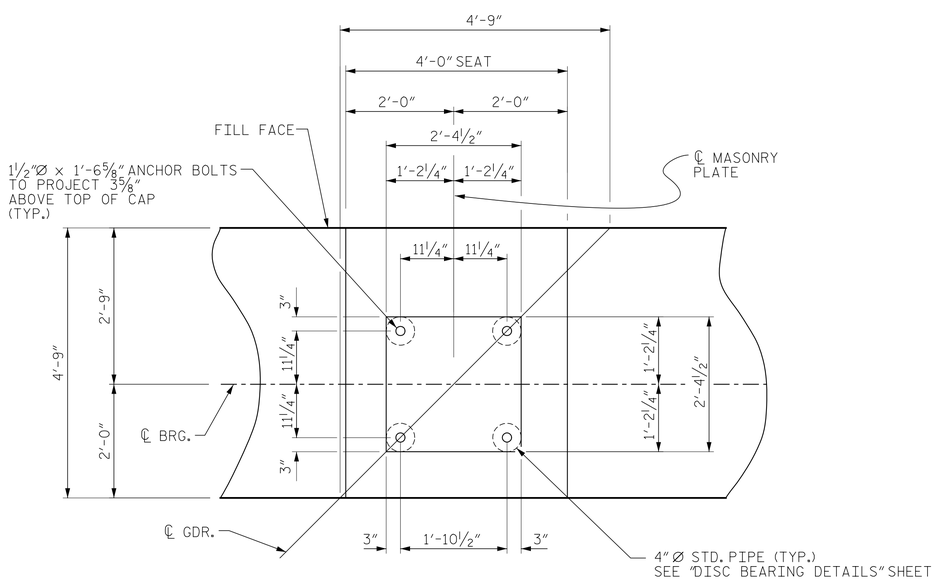

DETAIL 'A'

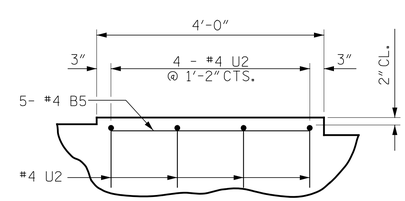

DETAIL "B"

PROJECT NO. I-0914BA

VANCE COUNTY

STATION: STA. 177+61.31 -NBL-
STA. 22+31.77 -Y2SBL-

SHEET 4 OF 5

STATE OF NORTH CAROLINA
DEPARTMENT OF TRANSPORTATION
RALEIGH

END BENT NO. 2

NORTH CAROLINA PROFESSIONAL SEAL FS 20771 ENGINEER Harry L. Willis
DocuSigned by:
CC0F1CE0A1A461...
7/14/2014

Vaughn & Melton
Consulting Engineers
Asheville, North Carolina 828-253-2796
Charlotte, North Carolina 704-357-0488
Tri-Cities, Tennessee 423-467-840
Knoxville, Tennessee 865-546-5800
Middlesboro, Kentucky 606-248-6600
Spartanburg, South Carolina 864-574-4775

Copyright © 2006 Vaughn & Melton, Inc.
All Rights Reserved

SHEET 32 OF 37

DWN. BY: MAF DATE: 5/14
CHKD. BY: HLW DATE: 5/14
DES. EGR. OF RECORD: RTS DATE: 5/14

REVISIONS						
NO.	BY:	DATE:	NO.	BY:	DATE:	
1			3			
2			4			

SHEET NO. S-80

TOTAL SHEETS 177