BILL OF MATERIAL
FOR END BENT NO. 2

BAR	NO.	SIZE	TYPE	LENGTH	WEIGHT	BAR	NO.	SIZE	TYPE	LENGTH	WEIGHT
B1	14	#11	1	45'-7"	3391						
B2	12	#5	STR	38'-8"	484	H409	1	#4	4	8'-9"	6
B3	18	#4	STR	4'-5"	53	H410	1	#4	4	7'-10"	5
B4	24	#4	STR	26'-5"	424	H411	1	#4	4	6'-11"	5
B5	25	#4	STR	3'-8"	61						
B6	14	#11	1	43'-8"	3248	K1	54	#4	STR	26'-5"	953
						K2	4	#4	STR	5'-7"	15
H1	4	#4	3	15'-11"	43	K3	4	#4	STR	5'-2"	14
H101	1	#4	3	15'-7"	10						
H102				14'-7"	10	S1	61	#5	6	13'-6"	859
H103				13'-8"	9	S2	61	#5	7	5'-4"	339
H104				12'-8"	8	S3	80	#5	6	12'-1"	1008
H105				11'-8"	8	S4	80	#5	7	3'-11"	327
H106				10'-9"	7	S5	42	#5	6	10'-8"	467
H107				9'-11"	7	S6	42	#5	7	2'-6"	110
H108				9'-0"	6	S7	84	#4	10	8'-1"	454
H109				8'-0"	5	S8	1	#5	6	11'-6"	12
H110				7'-0"	5	S9	1	#5	7	3'-4"	3
H111	1	#4	3	6'-1"	4	S10	6	#6	8	5'-6"	50
H2	4	#4	3	16'-3"	43	S11	4	#6	9	9'-11"	60
H201	1	#4	3	15'-11"	11	S12	2	#6	9	8'-11"	27
H202				15'-0"	10	S13	2	#5	6	15'-4"	32
H203				14'-0"	9	S14	2	#5	7	7'-2"	15
H204				13'-0"	9						
H205				12'-1"	8	U1	93	#4	2	4'-8"	290
H206				11'-1"	7	U2	20	#4	2	7'-5"	99
H207				10'-4"	7	U3	8	#4	5	9'-0"	48
H208				9'-4"	6	U4	8	#4	2	7'-0"	37
H209				8'-4"	6						
H210				7'-5"	5	V1	186	#6	STR	9'-3"	2584
H211	1	#4	3	6'-5"	4	V100	24	#5	STR	14'-1"	353
H3	4	#4	4	17'-7"	47	V101	2			13'-4"	28
H301	1	#4	4	17'-3"	12	V102	2			12'-3"	26
H302				16'-4"	11	V103	2			11'-2"	23
H303				15'-5"	10	V104	2			10'-2"	21
H304				14'-5"	10	V105	2			9'-1"	19
H305				13'-6"	9	V106	2			8'-0"	18
H306				12'-7"	8	V107	2			7'-0"	15
H307				11'-6"	8	V108	2			5'-11"	12
H308				10'-6"	7	V109	2			4'-10"	10
H309				9'-7"	6	V110	2	#5	STR	3'-10"	8
H310				8'-8"	6	V200	24	#5	STR	13'-10"	346
H311	1	#4	4	7'-9"	5	V201	2			13'-1"	27
H4	4	#4	4	16'-9"	46	V202	2			12'-1"	25
H401	1	#4	4	16'-5"	11	V203	2			11'-0"	23
H402				15'-6"	10	V204	2			10'-0"	21
H403				14'-7"	10	V205	2			8'-11"	19
H404				13'-7"	9	V206	2			7'-11"	17
H405				12'-8"	8	V207	2			6'-11"	14
H406				11'-9"	8	V208	2			5'-0"	12
H407				10'-7"	7	V209	2			4'-0"	10
H408	1	#4	4	9'-8"	6	V210	2	#5	STR	3'-10"	8

BAR TYPES

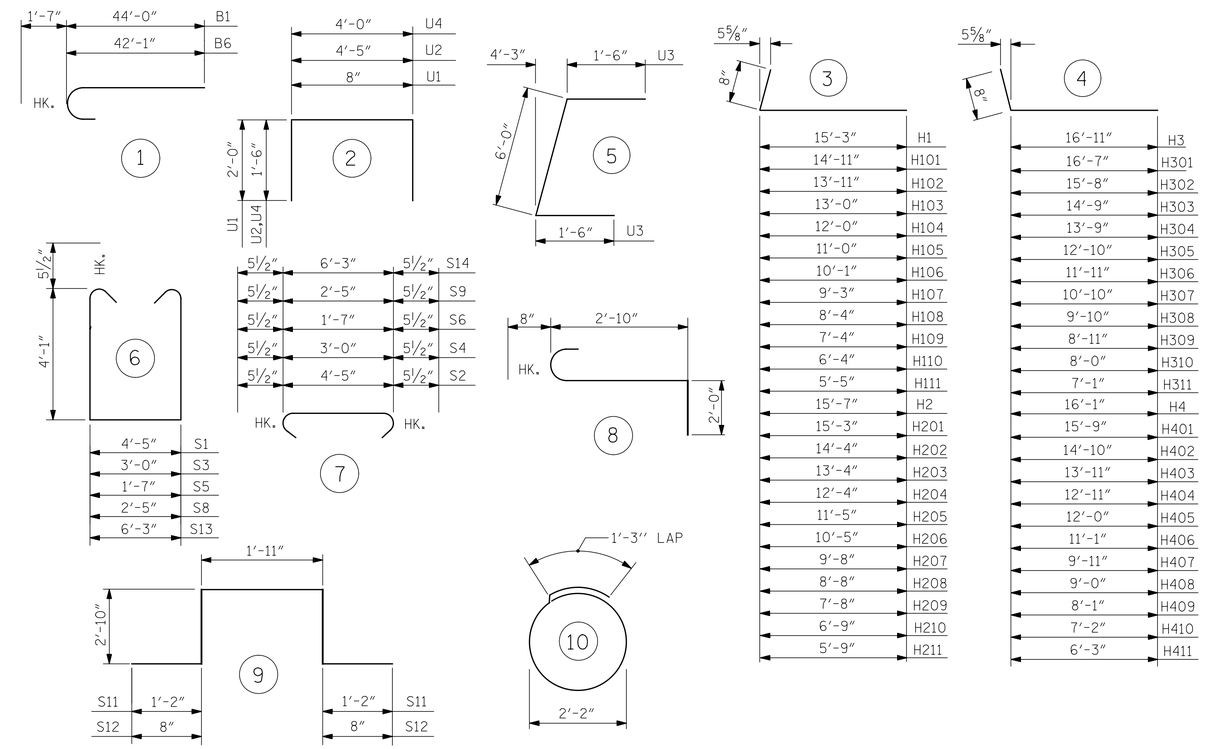

H1	15'-3"
H101	14'-11"
H102	13'-11"
H103	13'-0"
H104	12'-0"
H105	11'-0"
H106	10'-1"
H107	9'-3"
H108	8'-4"
H109	7'-4"
H110	6'-4"
H111	5'-5"
H2	15'-7"
H201	15'-3"
H202	14'-4"
H203	13'-4"
H204	12'-4"
H205	11'-5"
H206	10'-5"
H207	9'-8"
H208	8'-8"
H209	7'-8"
H210	6'-9"
H211	5'-9"

H3	16'-11"
H301	16'-7"
H302	15'-8"
H303	14'-9"
H304	13'-9"
H305	12'-10"
H306	11'-11"
H307	10'-10"
H308	9'-10"
H309	8'-11"
H310	8'-0"
H311	7'-1"
H4	16'-1"
H401	15'-9"
H402	14'-10"
H403	13'-11"
H404	12'-11"
H405	12'-0"
H406	11'-1"
H407	9'-11"
H408	9'-0"
H409	8'-1"
H410	7'-2"
H411	6'-3"

ALL BAR DIMENSIONS ARE OUT TO OUT.

CLASS A CONCRETE BREAKDOWN (FOR END BENT NO. 2)

POUR #1	CAP, LOWER PART OF WINGS, AND CONCRETE COLLARS	66.9 C.Y.
POUR #2	BACKWALL AND UPPER PART OF WINGS	36.8 C.Y.
TOTAL CLASS A CONCRETE		103.7 C.Y.

REINFORCING STEEL (FOR END BENT NO. 2)

17,036 LBS.

HP 14X73 STEEL PILES

* NO.: 23 LIN. FT.: 403

* INCLUDES WINGWALL PILES

STEEL PILE POINTS

NO. REQ'D.: 13

NOTE:

1) STEEL PILE POINTS ARE REQUIRED FOR PILE NO. 11 THROUGH PILE NO. 23 AT END BENT NO. 2. FOR STEEL PILE POINTS, SEE SECTION 450 OF THE STANDARD SPECIFICATIONS.

PROJECT NO. I-0914BA

VANCE COUNTY

STATION: STA. 177+61.31 -NBL-
STA. 22+31.77 -Y2SBL-

SHEET 5 OF 5

NORTH CAROLINA PROFESSIONAL SEAL ENGINEER HARDEN WILLIS COTTRELL 042361
DocuSigned by: Harden Willis Cottrell
7/14/2014

V&M Vaughn & Melton Consulting Engineers
Asheville, North Carolina 828-253-2796
Charlotte, North Carolina 704-357-0488
Tri-Cities, Tennessee 423-467-8401
Knoxville, Tennessee 865-546-5800
Middlesboro, Kentucky 606-248-6600
Spartanburg, South Carolina 864-574-4775
Copyright © 2006 Vaughn & Melton, Inc. All Rights Reserved

STATE OF NORTH CAROLINA
DEPARTMENT OF TRANSPORTATION
RALEIGH

END BENT NO. 2

SHEET 33 OF 37

DWN. BY: MAF DATE: 5/14
CHKD. BY: HLW DATE: 5/14
DES. EGR. OF RECORD: RTS DATE: 5/14

REVISIONS						
NO.	BY:	DATE:	NO.	BY:	DATE:	
1			3			
2			4			

SHEET NO. S-81

TOTAL SHEETS 177