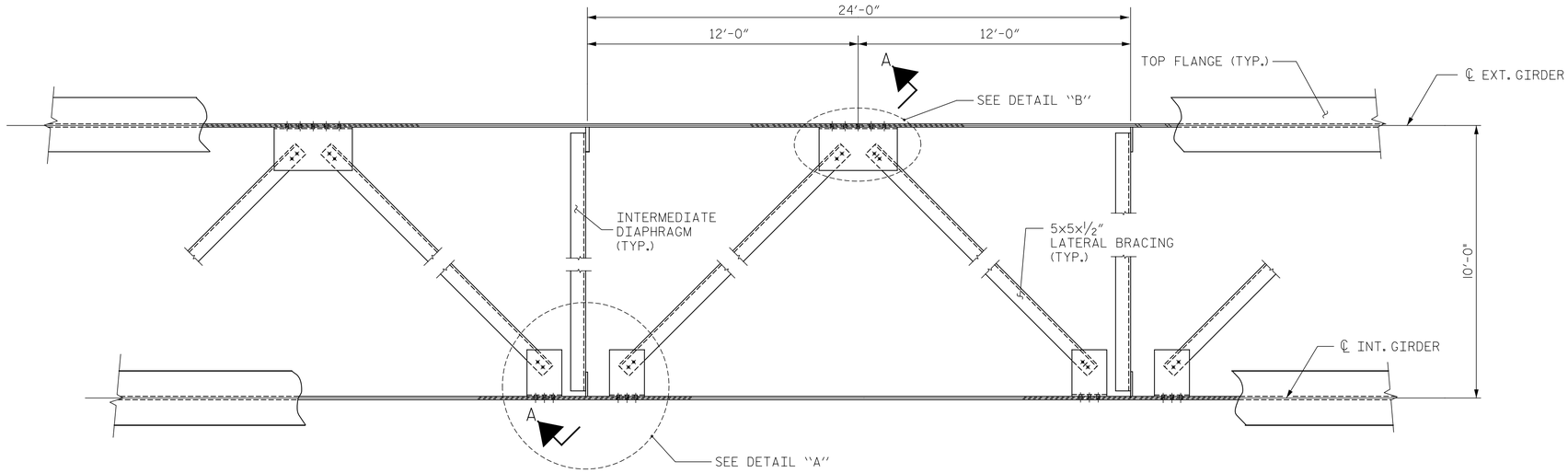

PART PLAN - NEAR TOP FLANGE LATERAL BRACING

(THROUGHOUT EXTERIOR BAYS ONLY)

NOTES

LATERAL BRACING ASSEMBLY SHALL COMPLY WITH SECTION 1072 OF THE STANDARD SPECIFICATIONS.

ALL STRUCTURAL STEEL SHALL BE AASHTO M270 GRADE 50W OR APPROVED EQUAL.

TENSION ON THE ASTM A325 BOLTS SHALL BE CALIBRATED USING DIRECT TENSION INDICATOR WASHERS IN ACCORDANCE WITH THE STANDARD SPECIFICATIONS.

ALL BOLTED CONNECTIONS SHALL BE 7/8" Ø HIGH STRENGTH BOLTS.

THE CONTRACTOR HAS THE OPTION TO CLIP THE PROTRUDING CORNERS OF THE GUSSET PLATES, AT NO ADDITIONAL COST TO THE DEPARTMENT.

BENT GUSSET PLATES OR ROLLED ANGLE SHAPES MAY BE SUBSTITUTED FOR THE WELDED GUSSET PLATES DETAILED IF APPROVED BY THE ENGINEER, AT NO ADDITIONAL COST TO THE DEPARTMENT.

INSTALL THE LATERAL BRACING AFTER ERECTING THE EXTERIOR GIRDER AND THE ADJACENT INTERIOR GIRDER AND INSTALLING THE INTERMEDIATE DIAPHRAGMS.

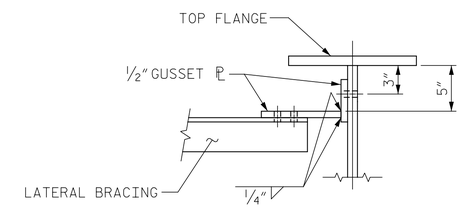

SECTION THRU CONNECTION

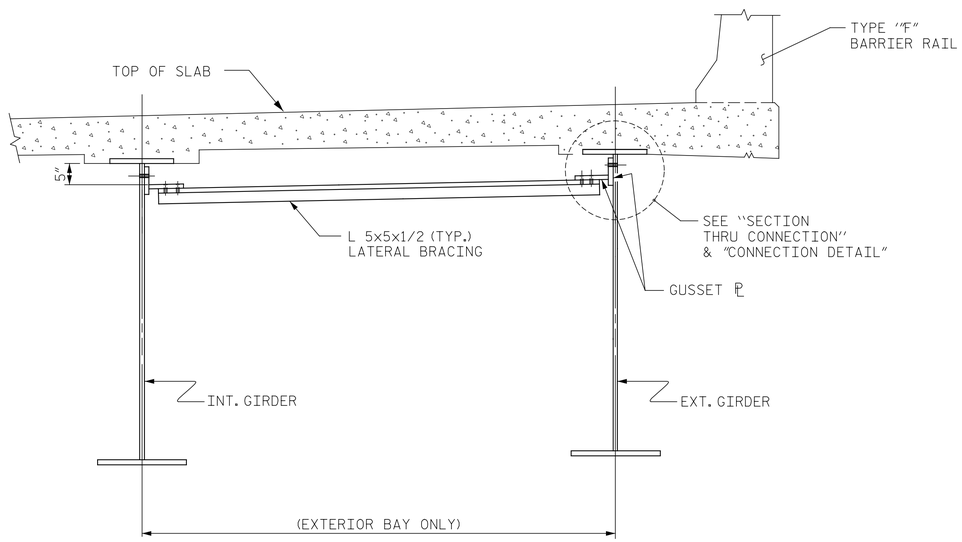

SECTION A-A

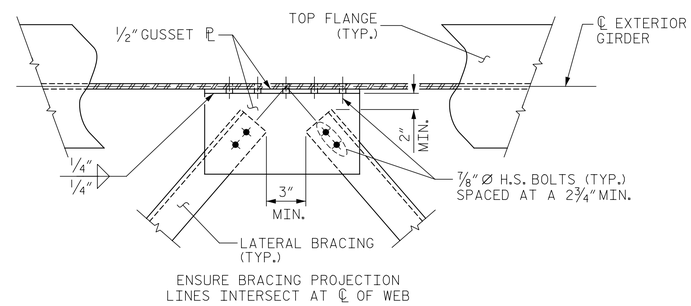

DETAIL "B"

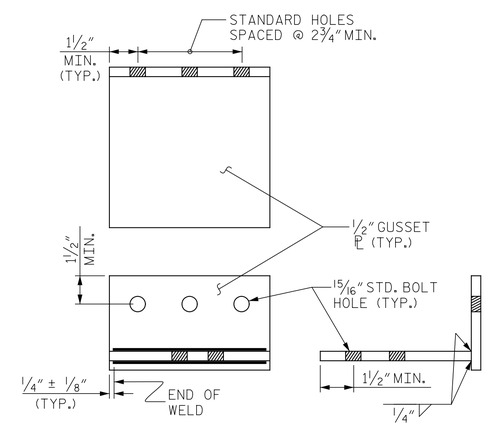

CONNECTION DETAIL

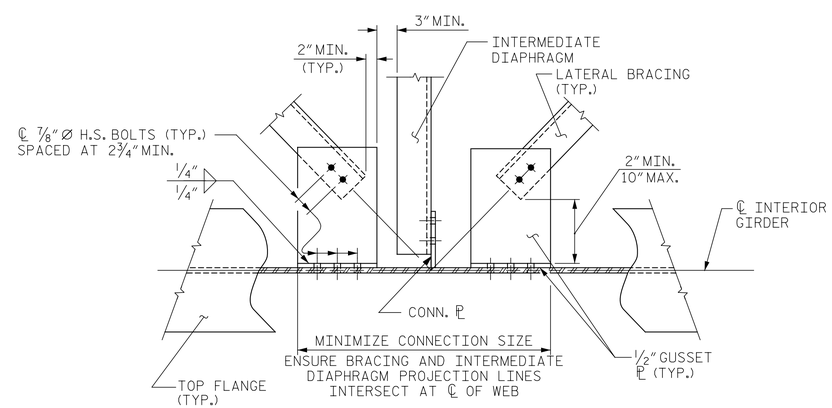

DETAIL "A"

PROJECT NO. I-0914AB

VANCE COUNTY

STATION: 177+61.31 -NBL-
22+31.77 -Y2SBL-

SHEET 3 OF 4

STATE OF NORTH CAROLINA
DEPARTMENT OF TRANSPORTATION
RALEIGH
STANDARD

LATERAL BRACING

NORTH CAROLINA PROFESSIONAL ENGINEER SEAL 20777 HARDY L. WILLIS
Docusigned by: Hardy Willis
CC3875CF022948...
7/14/2014

REVISIONS							
NO.	BY:	DATE:	NO.	BY:	DATE:		
1			3				
2			4				

SHEET NO. S-62

TOTAL SHEETS 177

SHEET 14 OF 37

ASSEMBLED BY: MAF		DATE: 5/14	
CHECKED BY : HLW		DATE: 5/14	
DRAWN BY : WMC	6/11	ADDED: 10/31/11	
CHECKED BY : GM	6/11		

$$$$$$SYSTIME$$$$$
$$$$$$$$$$$$$$$$$$$$$$$$DGN$$$$$$$$$$$$$$$$$$$$$$$$
$$$$USERNAME$$$$

STD. NO. LB1