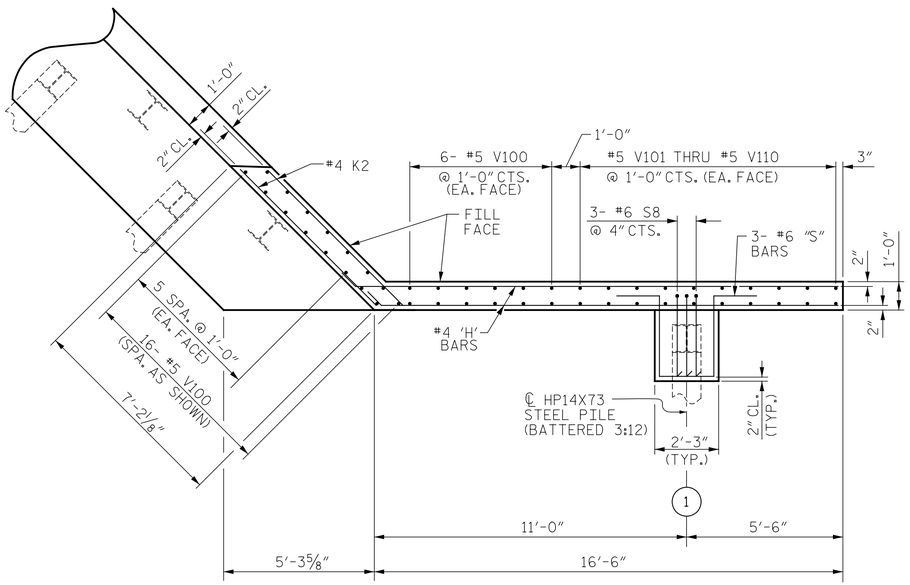

PLAN - WING (W1)

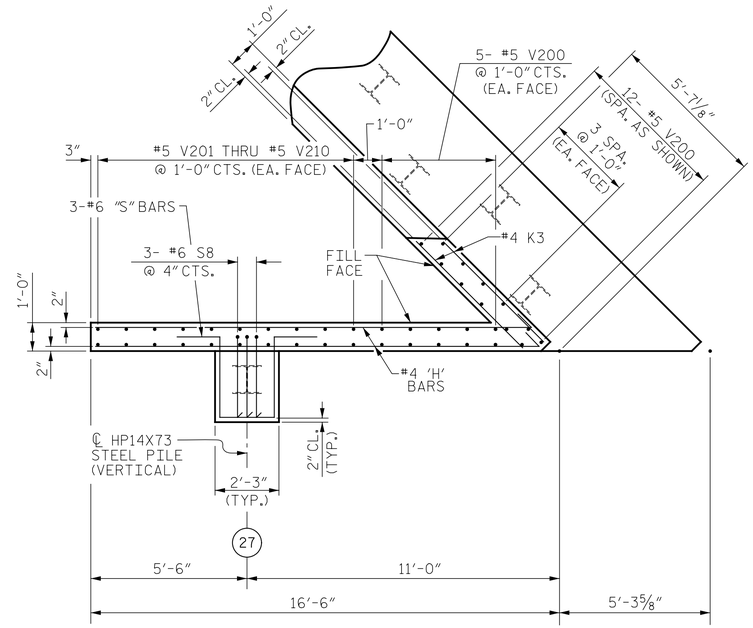

PLAN - WING (W2)

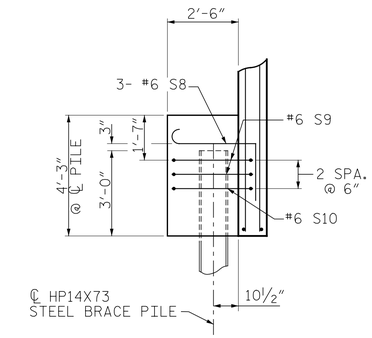

PARTIAL SECTION V-V

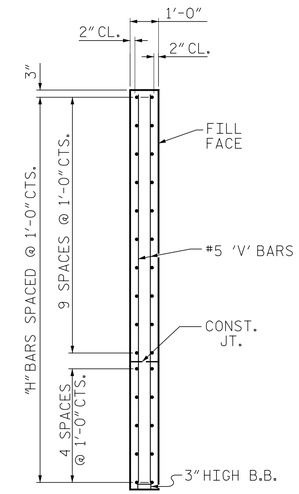

SECTION X-X

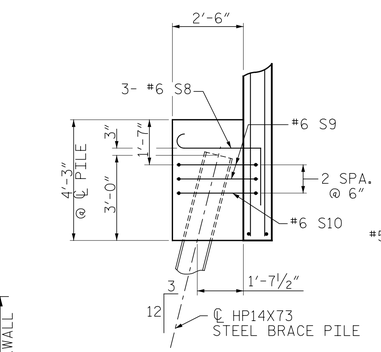

PARTIAL SECTION Z-Z

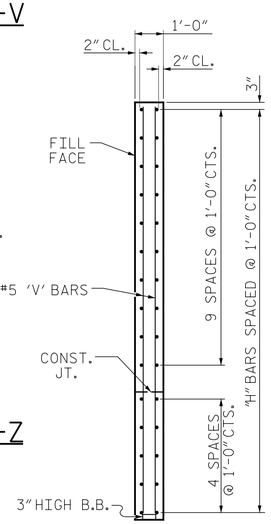

SECTION Y-Y

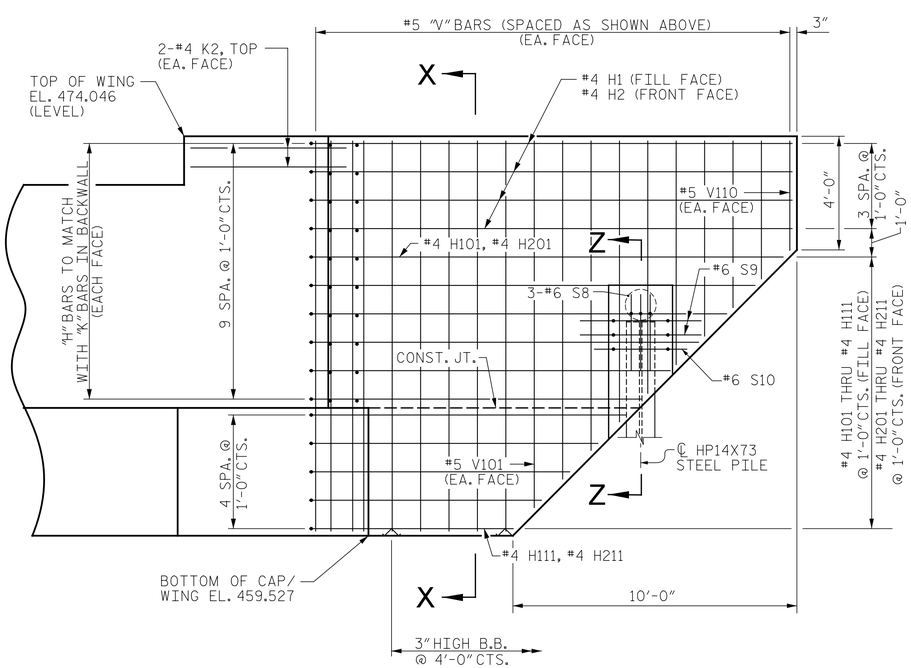

ELEVATION - WING (W1)

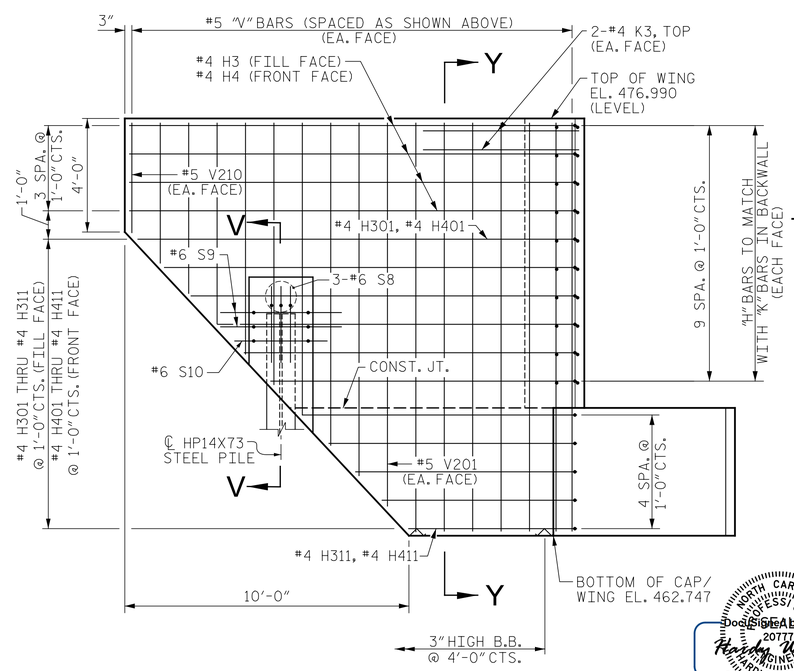

ELEVATION - WING (W2)

PROJECT NO. I-0914BA

VANCE COUNTY

STATION: 177+61.31 -NBL-
22+31.77 -Y2SBL-

SHEET 2 OF 5

STATE OF NORTH CAROLINA
DEPARTMENT OF TRANSPORTATION
RALEIGH

END BENT NO. 1

NORTH CAROLINA PROFESSIONAL SEAL 20777 ENGINEER HARDY W. BLISS

Digitally signed by Hardy Wallace Bliss
CC26001-CR02HLB
7/14/2014

V&M
Vaughn & Melton
Consulting Engineers
Asheville, North Carolina 828-253-2796
Charlotte, North Carolina 704-357-0488
Tri-Cities, Tennessee 423-467-8401
Knoxville, Tennessee 865-546-5800
Middlesboro, Kentucky 606-248-6600
Spartanburg, South Carolina 864-574-4775
Copyright © 2006 Vaughn & Melton, Inc. All Rights Reserved

SHEET 25 OF 37

DWN. BY: MAF DATE: 5/14
CHKD. BY: HLW DATE: 5/14
DES. EGR. OF RECORD: RTS DATE: 5/14

REVISIONS						
NO.	BY:	DATE:	NO.	BY:	DATE:	
1			3			
2			4			

SHEET NO. S-73

TOTAL SHEETS 177