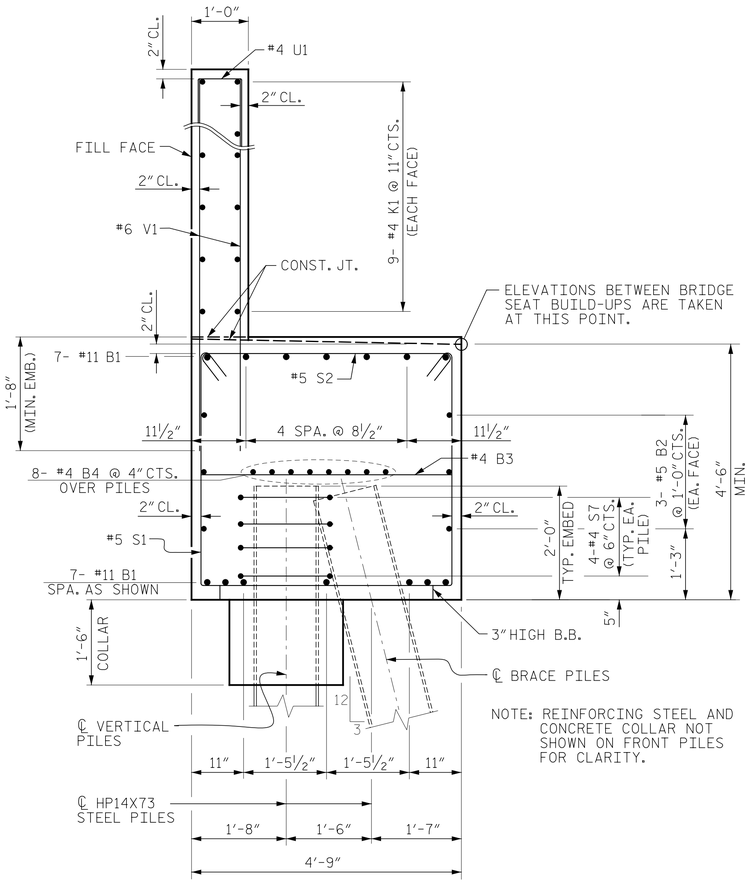

SECTION A-A

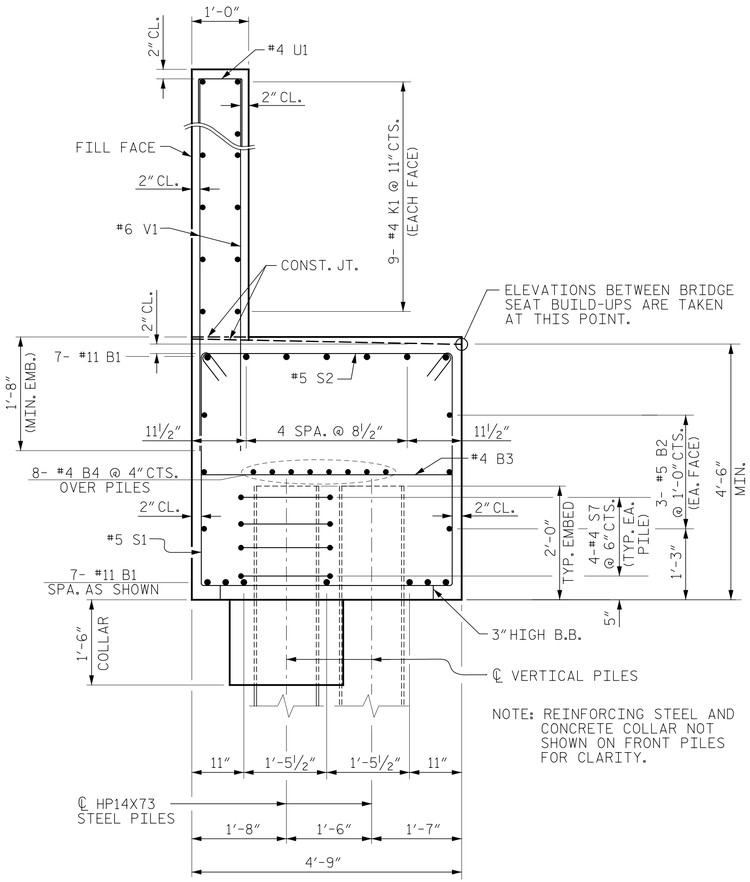

SECTION B-B

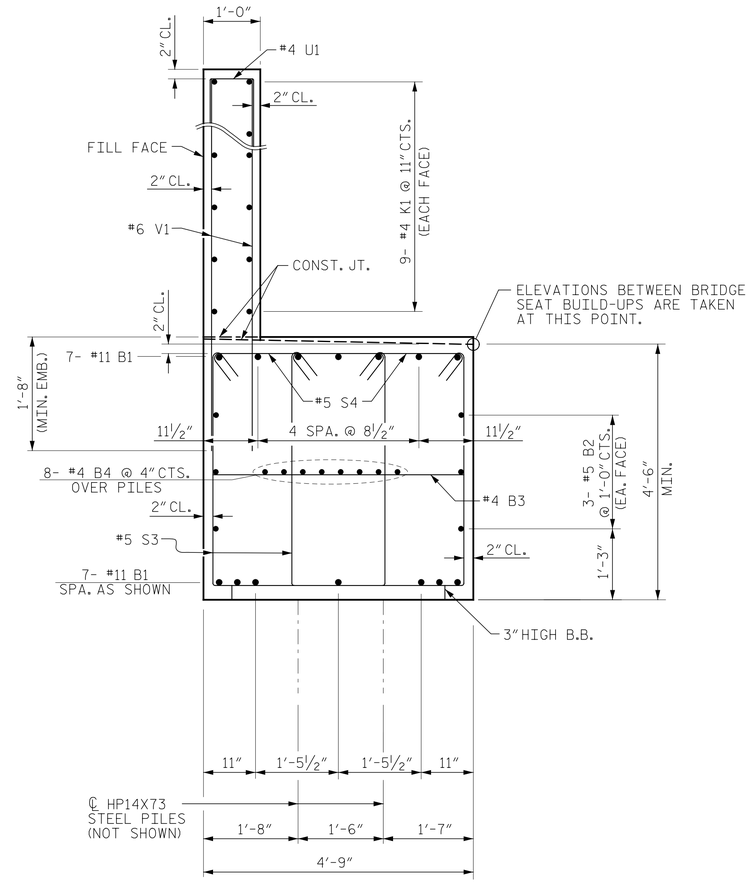

SECTION C-C

TOP OF END BENT #1 PILE ELEVATIONS									
PILE	1	2	3	4	5	6	7	8	9
ELEVATION	467.261	461.746	461.863	461.980	462.097	462.214	462.331	462.448	462.565
PILE	10	11	12	13	14	15	16	17	18
ELEVATION	462.682	462.799	462.916	463.033	463.150	463.267	463.384	463.501	463.618
PILE	19	20	21	22	23	24	25	26	27
ELEVATION	463.735	463.852	463.969	464.086	464.203	464.320	464.437	464.554	470.356

NOTES:

STIRRUPS IN CAP MAY BE SHIFTED AS NECESSARY TO CLEAR ANCHOR BOLTS.

BACKWALL SHALL BE PLACED BEFORE APPLYING THE EPOXY PROTECTIVE COATING.

THE TOP SURFACE OF THE END BENT CAPS SHALL BE CURED IN ACCORDANCE WITH THE STANDARD SPECIFICATIONS EXCEPT THE MEMBRANCE CURING COMPOUND METHOD SHALL NOT BE USED.

THE TOP SURFACE OF THE CAP EXCEPT THE BRIDGE SEAT BUILDUPS SHALL BE SLOPED TRANSVERSELY FROM THE FILL FACE TO THE BACK FACE AT THE RATE OF 2%.

THE CONCRETE IN THE SHADED AREA OF THE WING SHALL BE POURED AFTER THE BARRIER RAIL IS CAST IF SLIP FORMING IS USED.

INSTALL THE 4"DIA. DRAIN PIPE THROUGH THE WING WALL AS REQUIRED FOR REINFORCED BRIDGE APPROACH FILLS, SEE ROADWAY PLANS. REINFORCING STEEL IN THE WING WALL MAY BE SHIFTED AS NECESSARY TO CLEAR THE DRAIN PIPE.

PROJECT NO. I-0914BA
VANCE COUNTY
STATION: STA. 177+61.31 -NBL-
STA. 22+31.77 -Y2SBL-

SHEET 3 OF 5

STATE OF NORTH CAROLINA
DEPARTMENT OF TRANSPORTATION
RALEIGH

END BENT NO. 1

NORTH CAROLINA PROFESSIONAL SEAL 19857 ENGINEER HARDY L. WILLIS
DocuSigned by: Hardy Willis
CA3B7FC4D0E3461...
7/14/2014

V&M Vaughn & Melton Consulting Engineers
Charlotte, North Carolina 704-357-0488
Tri-Cities, Tennessee 423-467-8401
Knoxville, Tennessee 865-546-5800
Asheville, North Carolina 828-253-2796
Middlesboro, Kentucky 606-248-6600
Spartanburg, South Carolina 864-574-4775
Copyright © 2006 Vaughn & Melton, Inc. All Rights Reserved

SHEET 26 OF 37
DWN. BY: MAF DATE: 2/14
CHKD. BY: HLW DATE: 2/14
DES. EGR. OF RECORD: RTS DATE: 2/14

REVISIONS						
NO.	BY:	DATE:	NO.	BY:	DATE:	
1			3			
2			4			

SHEET NO. S-74
TOTAL SHEETS 177