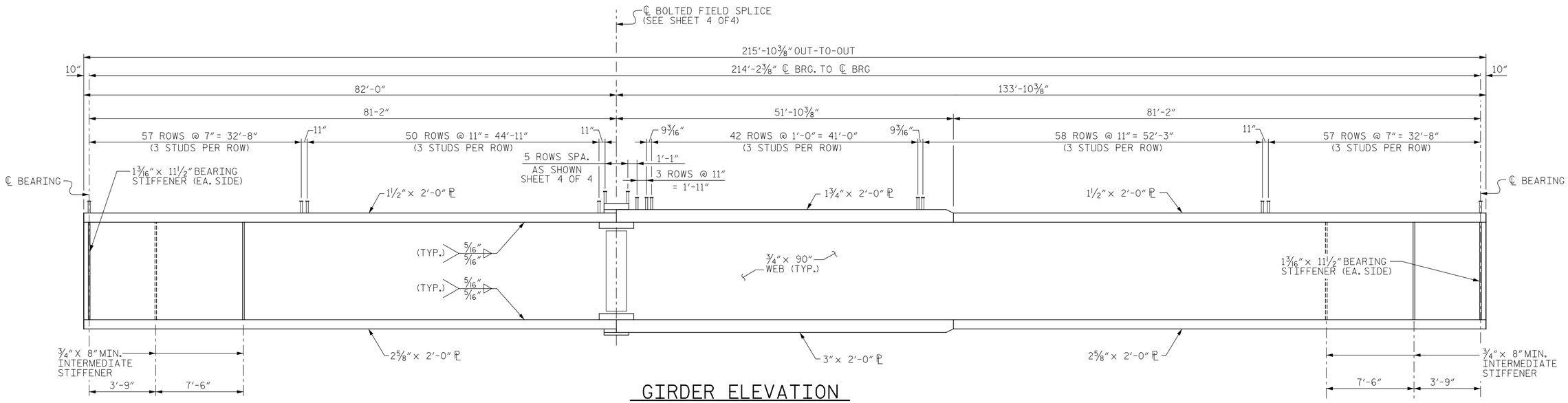

GIRDER ELEVATION

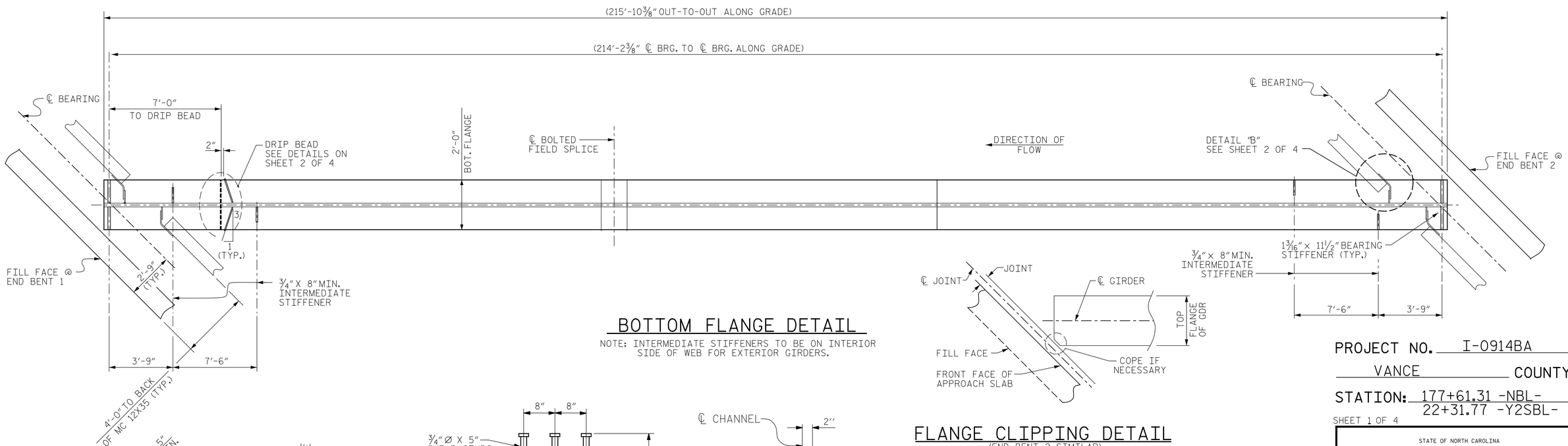

BOTTOM FLANGE DETAIL

NOTE: INTERMEDIATE STIFFENERS TO BE ON INTERIOR SIDE OF WEB FOR EXTERIOR GIRDERS.

FLANGE CLIPPING DETAIL

(END BENT 2 SIMILAR)

END OF GIRDER DETAIL

(END BENT 2 SIMILAR)

@ EACH END GIRDER

@ END BENT DIAPHRAGM

SHEAR STUD DETAIL

PROJECT NO. I-0914BA

VANCE COUNTY

STATION: 177+61.31 -NBL-
22+31.77 -Y2SBL-

SHEET 1 OF 4

DocuSigned by:
P.E. SEAL
Hardy Wellas
C0D7F1F0C0D91...
7/14/2014

Vaughn & Melton
Consulting Engineers
Asheville, North Carolina
828-253-2796
Charlotte, North Carolina 704-357-0488
Tri-Cities, Tennessee 423-467-8403
Knoxville, Tennessee 865-546-5800
Middlesboro, Kentucky 606-248-6600
Spartanburg, South Carolina 864-574-4775
Copyright © 2006 Vaughn & Melton, Inc. All Rights Reserved

STATE OF NORTH CAROLINA
DEPARTMENT OF TRANSPORTATION
RALEIGH

STRUCTURAL STEEL DETAILS

SHEET 12 OF 37		REVISIONS						SHEET NO.
DWN. BY: MAF	DATE: 5/14	NO.	BY:	DATE:	NO.	BY:	DATE:	S-60
CHKD. BY: HLW	DATE: 5/14	1			3			TOTAL SHEETS
DES. EGR. OF RECORD: RTS	DATE: 5/14	2			4			177