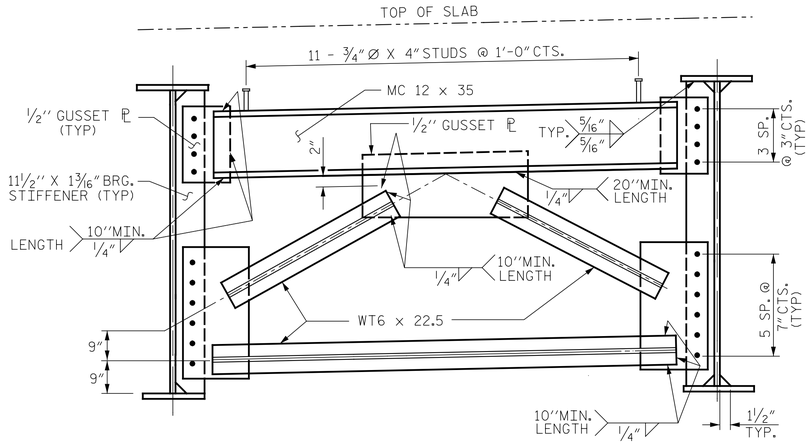

END BENT DIAPHRAGMS (D1)

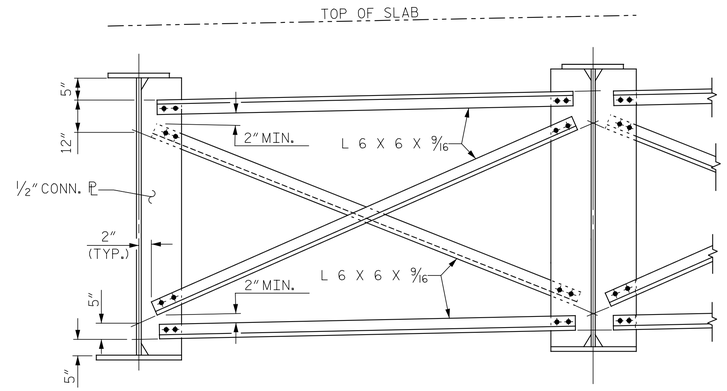

TYPICAL INTERMEDIATE CROSSFRAME (D2)

NOTES

ALL STRUCTURAL STEEL SHALL BE AASHTO M270 GRADE 50W AND PAINTED IN ACCORDANCE WITH SYSTEM 4 OF ARTICLE 442-8 OF THE STANDARD SPECIFICATIONS UNLESS OTHERWISE NOTED ON THE PLANS.

ALL DIMENSIONS SHOWN ARE HORIZONTAL OR VERTICAL, UNLESS OTHERWISE NOTED.

ALL FIELD CONNECTIONS TO BE ⅞" DIA. HIGH STRENGTH BOLTS UNLESS OTHERWISE NOTED.

BEARING STIFFENERS ARE TO BE PLACED NORMAL TO THE WEB OF THE GIRDER AND SHALL BE PLUMB.

A CHARPY V-NOTCH TEST IS REQUIRED FOR WEB PLATES, BOTTOM FLANGE PLATES, BOTTOM FLANGE SPLICE PLATES, AND WEB SPLICE PLATES FOR ALL GIRDERS AND IN ACCORDANCE WITH ARTICLE 1072-7 OF THE STANDARD SPECIFICATIONS.

PERMITTED FLANGE AND WEB SHOP SPLICES SHALL NOT BE LOCATED WITHIN 15 FEET OF MAXIMUM DEAD LOAD DEFLECTION. KEEP 2 FEET MINIMUM BETWEEN WEB AND FLANGE SHOP SPLICES. KEEP 6" MINIMUM BETWEEN CONNECTOR PLATE AND WEB OR FLANGE SHOP SPLICES.

STUDS ON GIRDERS MAY BE SHIFTED UP TO 1" IF NECESSARY TO CLEAR FLANGE SPLICE WELD.

TENSION ON THE ASTM A325 BOLTS SHALL BE CALIBRATED USING DIRECT TENSION INDICATOR WASHERS IN ACCORDANCE WITH ARTICLE 440-8 OF THE STANDARD SPECIFICATIONS.

END OF GIRDERS SHALL BE PLUMB.

BEARING STIFFENER MAY REQUIRE COPING IF WIDER THAN BOTTOM FLANGE.

FABRICATORS SHALL DETAIL DIAPHRAGM MEMBERS AND CONNECTIONS FOR STEEL DEAD LOAD FIT UP.

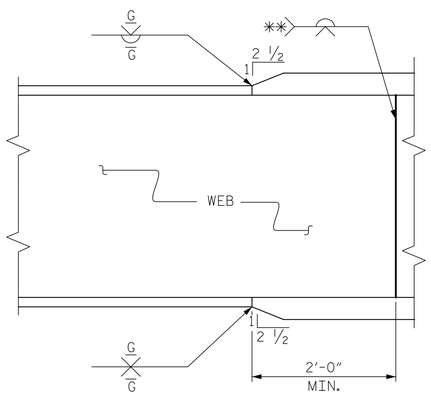

ELEVATION

TYPICAL FLANGE & WEB BUTT JOINT

** GRIND SMOOTH AND FLUSH ON OUTER FACE OF EXTERIOR GIRDERS

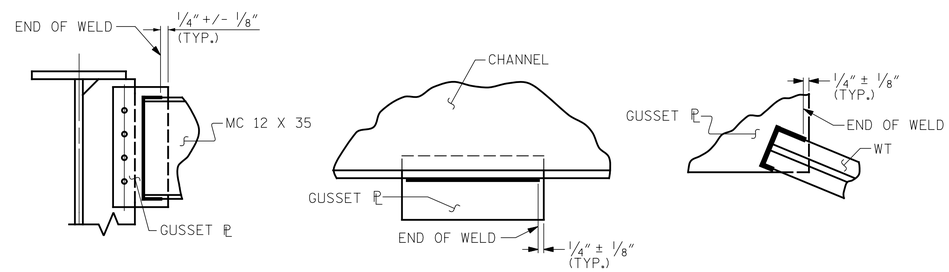

TYPICAL GUSSET PLATE CONNECTIONS

WELD TERMINATION DETAILS

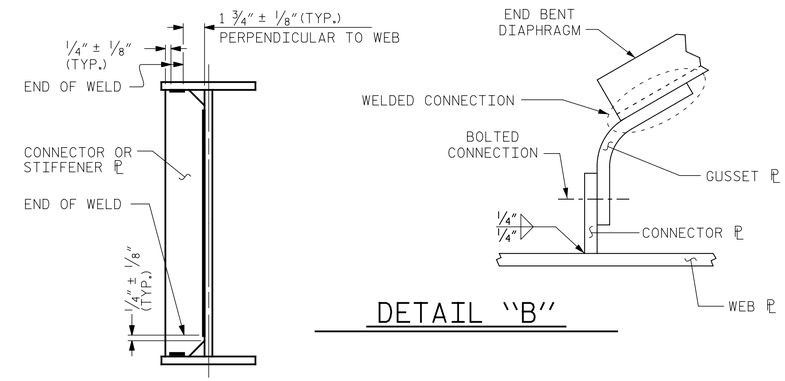

DETAIL "B"

WELD TERMINATION DETAIL AT STIFFENER OR CONNECTOR PLATE

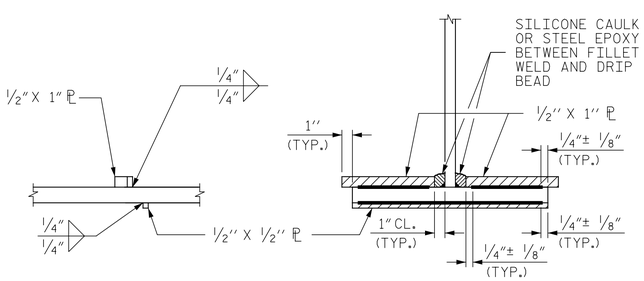

SIDE VIEW

SECTION

DRIP BEAD DETAILS

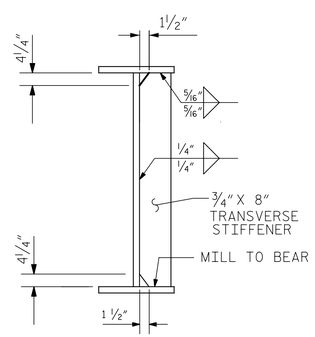

TRANSVERSE STIFFENER

INSIDE OF EXTERIOR GIRDER FOR GIRDER ERECTION. SEE FRAMING PLAN FOR LOCATIONS.

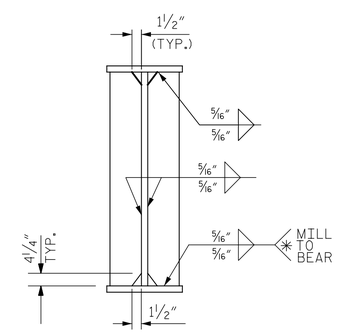

BEARING STIFFENER/ CONNECTOR PLATE

NOTE: DO NOT CLIP PLATE AT TOP OUTSIDE CORNER OF STIFFENER PLATE.

* WELD TO BOTTOM FLANGE IS ONLY REQUIRED WHEN BEARING STIFFENER IS ALSO CONNECTOR PLATE

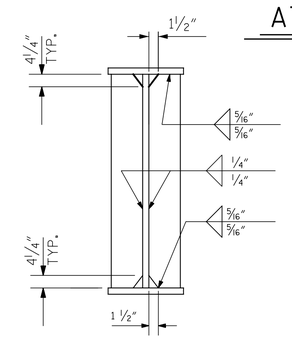

CONNECTOR PLATE

PROJECT NO. I-0914AB

VANCE COUNTY

STATION: 177+61.31 -NBL-
22+31.77 -Y2SBL-

SHEET 2 OF 4

STATE OF NORTH CAROLINA
DEPARTMENT OF TRANSPORTATION
RALEIGH

STANDARD

STRUCTURAL STEEL DETAILS

NORTH CAROLINA PROFESSIONAL SEAL ENGINEER CODY L. WILKINS 7/14/2014

Digitally signed by Hardy Wilks

ASSEMBLED BY: MAF	DATE: 5/14
CHECKED BY : HLW	DATE: 5/14
DRAWN BY : WMC 6/11	ADDED: 10/31/11
CHECKED BY : GM 6/11	

SHEET 13 OF 37

REVISIONS						SHEET NO.
NO.	BY:	DATE:	NO.	BY:	DATE:	S-61
1			3			TOTAL SHEETS
2			4			177

STD. NO. LB1

$$$$$$SYSTIME$$$$$
$$$$$$$$$$$$$$$$$$$$$$DGN$$$$$$$$$$$$$$$$$$$$$$$
$$$$USERNAME$$$$