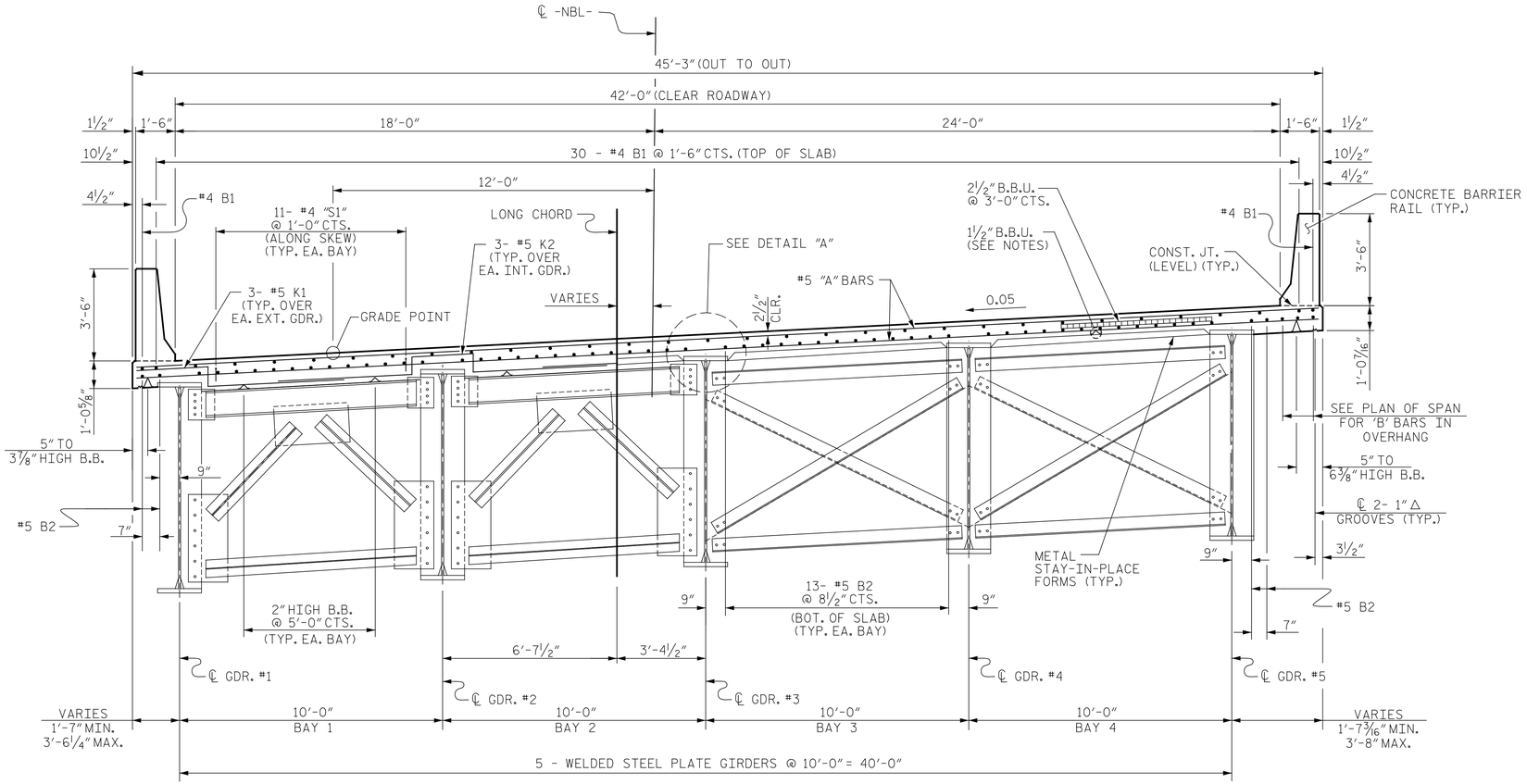

HALF-SECTION @ END BENT DIAPHRAGMS

HALF-SECTION @ INTERMEDIATE DIAPHRAGMS

NOTES:

PROVIDE 1½" HIGH BEAM BOLSTERS UPPER AT 4'-0" CTS. ATOP THE STAY-IN-PLACE METAL FORMS TO SUPPORT THE BOTTOM MAT OF "A" BARS. WHEN USING REMOVABLE FORMS, PROVIDE CONTINUOUS HIGH CHAIRS FOR METAL DECK (C.H.C.M.) @ 4'-0" CTS. WITH A HEIGHT TO SUPPORT THE BOTTOM MAT OF 'A' BARS A CLEAR DISTANCE OF 2¾" ABOVE THE TOP OF THE REMOVABLE FORM.

THE CONTRACTOR MAY, WHEN NECESSARY, PROPOSE A SCHEME FOR AVOIDING INTERFERENCE BETWEEN STAY-IN-PLACE METAL FORM SUPPORTS OR FORMS AND GIRDER STIFFENERS OR CONNECTOR PLATES. THE PROPOSAL SHALL BE INDICATED, AS APPROPRIATE, ON EITHER THE STEEL WORKING DRAWINGS OR THE STAY-IN-PLACE METAL FORM WORKING DRAWINGS.

METAL STAY-IN-PLACE FORMS SHALL NOT BE WELDED TO BEAM OR GIRDER FLANGES IN THE ZONES REQUIRING CHARPY V-NOTCH TEST. SEE STRUCTURAL STEEL DETAIL SHEETS.

STRUCTURAL STEEL ERECTION SHALL BE COMPLETE BEFORE FALSEWORK OR FORMS ARE PLACED ON THE UNIT.

TYPICAL SECTION

SINGLE SPAN, SIMPLY SUPPORTED FOR DEAD LOAD AND LIVE LOAD, WITH COMPOSITE DECK ON WELDED STEEL PLATE GIRDERS.

GIRDERS ARE PARALLEL TO LONG CHORD.

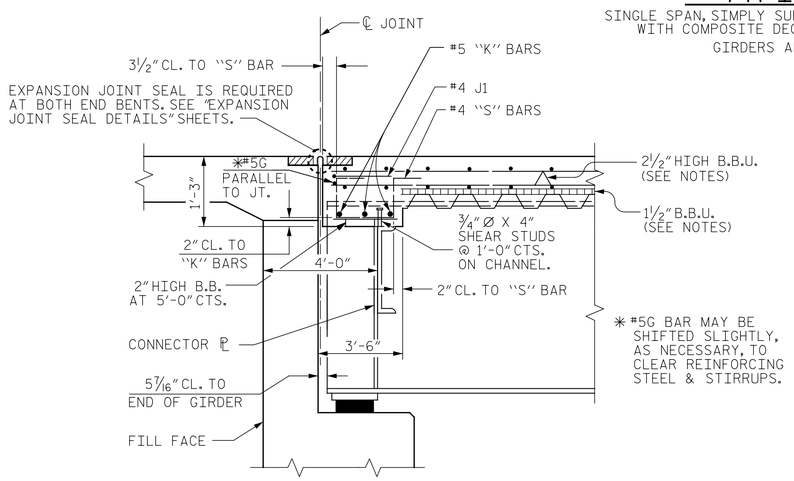

END OF GIRDER DETAIL AT END BENT

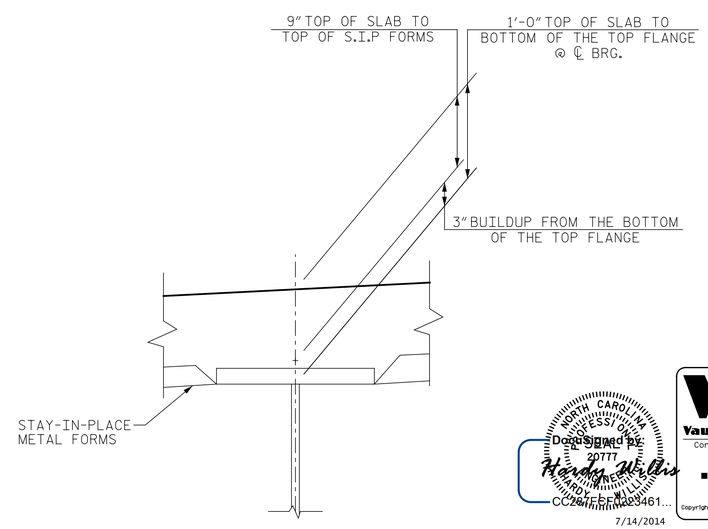

DETAIL "A"

PROJECT NO. I-0914BA

VANCE COUNTY

STATION: 177+61.31 -NBL-
22+31.77 -Y2SBL-

STATE OF NORTH CAROLINA
DEPARTMENT OF TRANSPORTATION
RALEIGH

TYPICAL SECTION

Vaughn & Melton
Consulting Engineers
Asheville, North Carolina 828-253-2796
Charlotte, North Carolina 704-357-0488
Tri-Cities, Tennessee 423-467-8401
Knoxville, Tennessee 865-546-5800
Middlesboro, Kentucky 606-248-6600
Spartanburg, South Carolina 864-574-4775
Copyright © 2006 Vaughn & Melton, Inc. All Rights Reserved

NORTH CAROLINA PROFESSIONAL SEAL 20777 HARDY W. LEWIS ENGINEER
DocuSigned by: Hardy W. Lewis
CC2B11CE4D23461...
7/14/2014

SHEET 7 OF 37		REVISIONS						SHEET NO.
DWN. BY: MAF	DATE: 5/14	NO.	BY:	DATE:	NO.	BY:	DATE:	S-55
CHKD. BY: HLW	DATE: 5/14	1			3			TOTAL SHEETS
DES. EGR. OF RECORD: RTS	DATE: 5/14	2			4			177