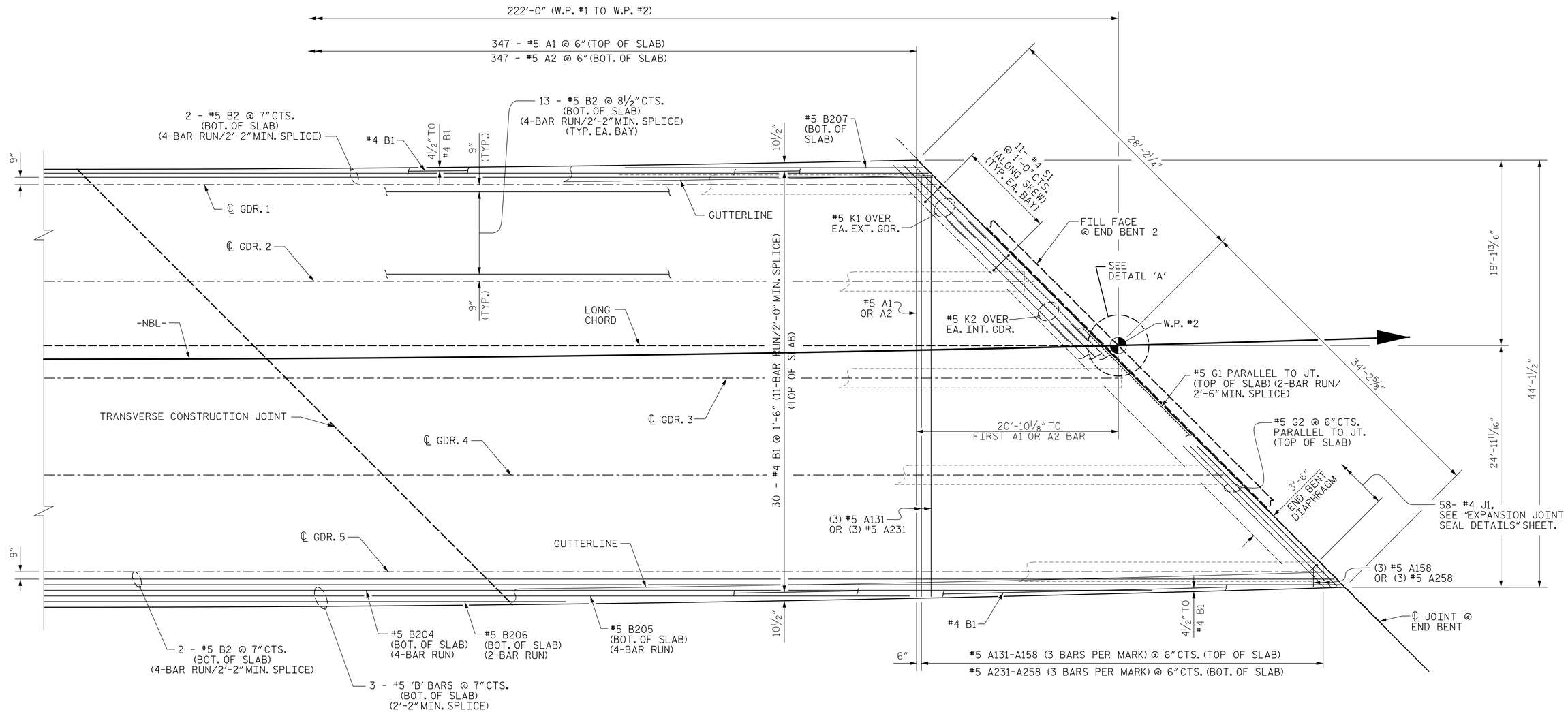

PARTIAL PLAN OF SPAN

NOTES:

FOR LOCATION OF INTERMEDIATE DIAPHRAGMS, SEE "FRAMING PLAN".

FOR LOCATION OF TRANSVERSE CONSTRUCTION JOINT, SEE POURING SEQUENCE ON BILL OF MATERIAL SHEET.

FOR BARRIER RAIL REINFORCING STEEL AND DETAILS, SEE "CONCRETE BARRIER RAIL" SHEET.

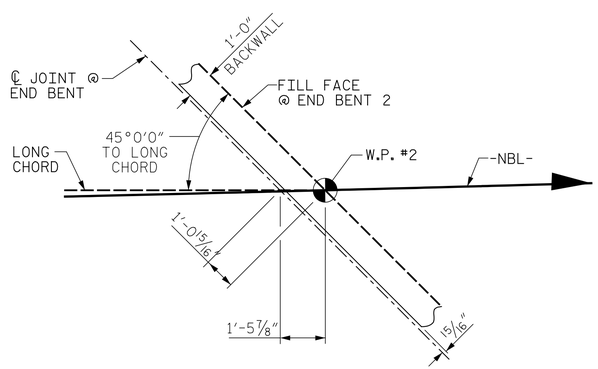

DETAIL 'A'

END BENT 2

PROJECT NO. I-0914BA

VANCE COUNTY

STATION: 177+61.31 -NBL-
22+31.77 -Y2SBL-

SHEET 2 OF 2

STATE OF NORTH CAROLINA
DEPARTMENT OF TRANSPORTATION
RALEIGH

PLAN OF SPAN

NORTH CAROLINA PROFESSIONAL SEAL ENGINEER

DocuSigned by: Randall Willis
CC0A0F0A0A0A4A0...
7/14/2014

V&M Vaughn & Melton Consulting Engineers
Asheville, North Carolina 828-253-2796
Charlotte, North Carolina 704-357-0488
Tri-Cities, Tennessee 423-467-8401
Knoxville, Tennessee 865-546-5800
Middlesboro, Kentucky 606-248-6600
Spartanburg, South Carolina 864-574-4775
Copyright © 2006 Vaughn & Melton, Inc. All Rights Reserved

SHEET 9 OF 37			REVISIONS						SHEET NO.
DWN. BY: MAF	DATE: 5/14		NO.	BY:	DATE:	NO.	BY:	DATE:	S-57
CHKD. BY: HLW	DATE: 5/14		1			3			TOTAL SHEETS
DES. EGR. OF RECORD: RTS	DATE: 5/14		2			4			177