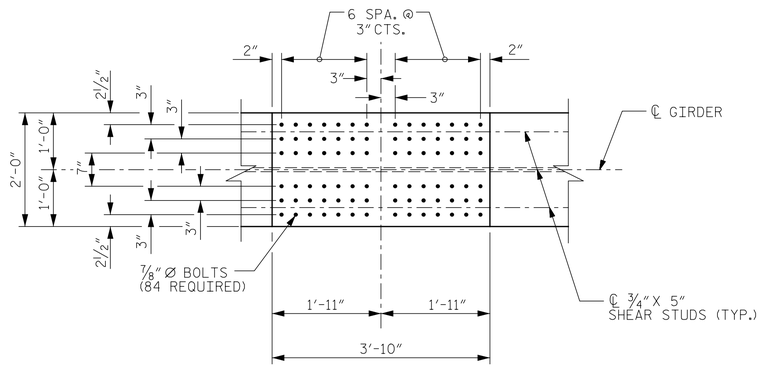

PLAN (TOP OF TOP FLANGE)

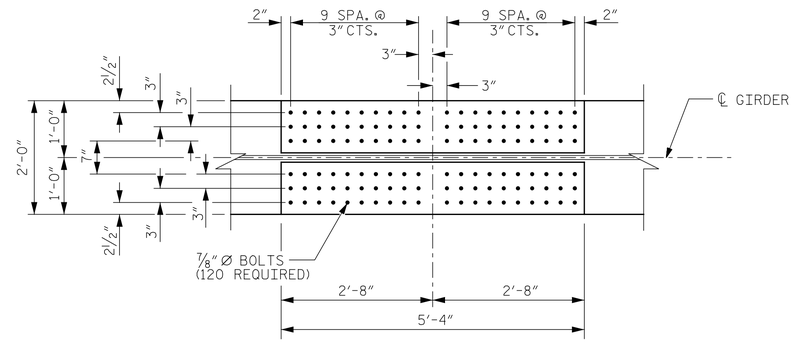

PLAN (TOP OF BOTTOM FLANGE)

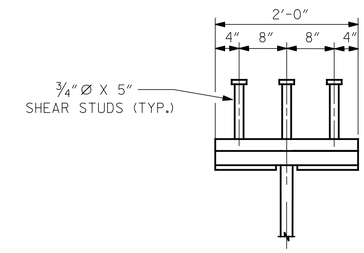

SHEAR STUD DETAIL FOR TOP FLANGE SPLICE PLATE

SHEAR STUDS ARE TO BE SHOP WELDED ON TOP OF PLATE BEFORE FIELD ASSEMBLY.

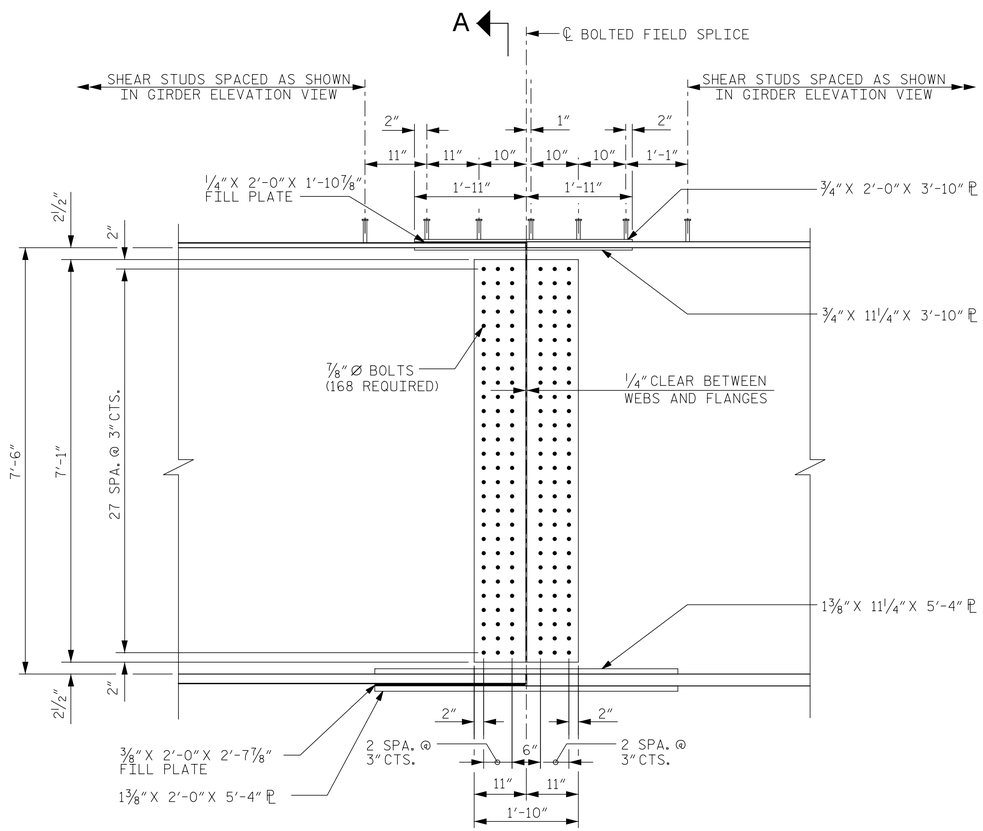

ELEVATION

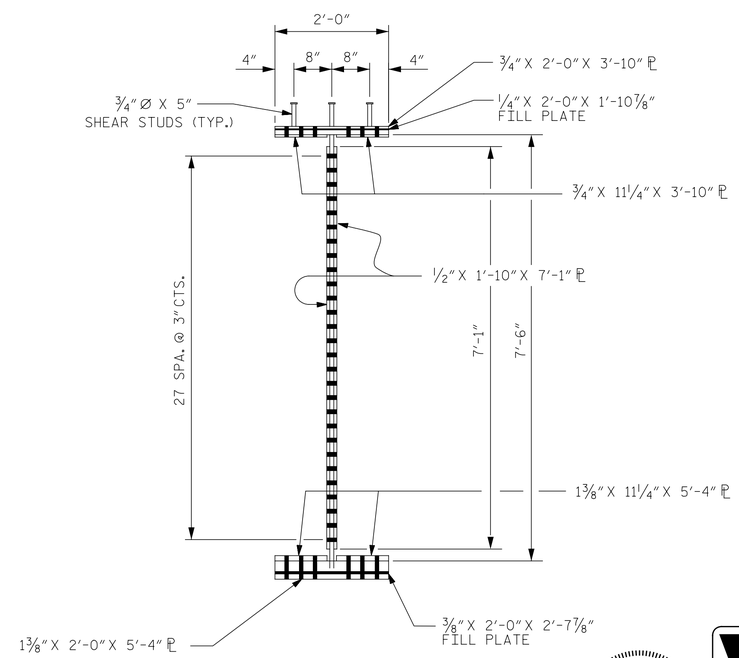

SECTION A-A

A

BOLTED FIELD SPLICE DETAILS

PROJECT NO. I-0914BA

VANCE COUNTY

STATION: 177+61.31 -NBL-
22+31.77 -Y2SBL-

SHEET 4 OF 4

STATE OF NORTH CAROLINA
DEPARTMENT OF TRANSPORTATION
RALEIGH

STRUCTURAL STEEL DETAILS

NORTH CAROLINA PROFESSIONAL SEAL 20777 ENGINEER HARRY E. DROWN

DocuSigned by: Harry Wilkes
CC2B1A1E0D4461...
7/14/2014

V&M Vaughn & Melton Consulting Engineers
Asheville, North Carolina 828-253-2796
Charlotte, North Carolina 704-357-0488
Tri-Cities, Tennessee 423-467-8401
Knoxville, Tennessee 865-546-5800
Middlesboro, Kentucky 606-248-6600
Spartanburg, South Carolina 864-574-4775

Copyright © 2006 Vaughn & Melton, Inc. All Rights Reserved

SHEET 15 OF 37		REVISIONS						SHEET NO.
DWN. BY: MAF	DATE: 5/14	NO.	BY:	DATE:	NO.	BY:	DATE:	S-63
CHKD. BY: HLW	DATE: 5/14	1			3			TOTAL SHEETS
DES. EGR. OF RECORD: RTS	DATE: 5/14	2			4			177