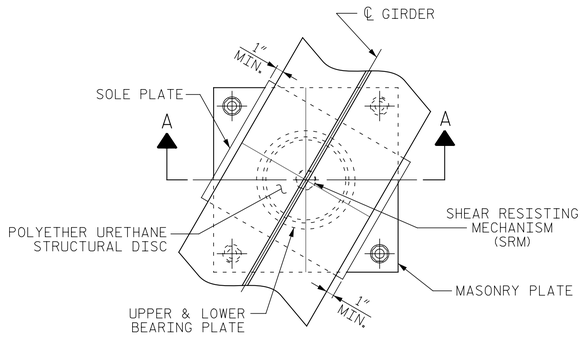

PLAN

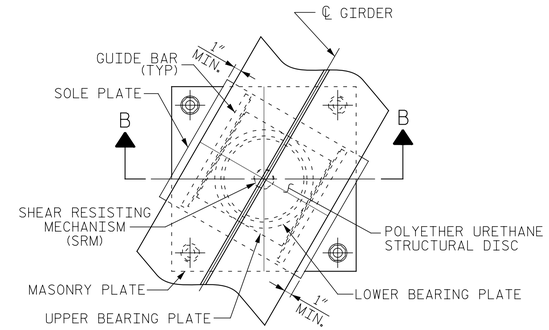

PLAN

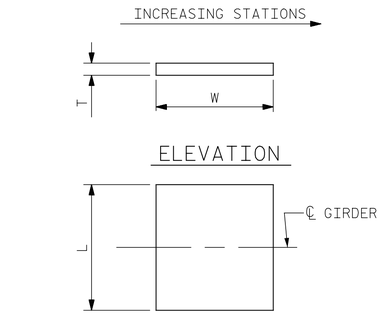

PLAN

NOTE:
DIMENSIONS "W" AND "T" SHALL BE DETERMINED BY THE BEARING MANUFACTURER.

SOLE PLATE DETAILS

NOTES

FOR DISC BEARINGS, SEE SPECIAL PROVISIONS.

ALL BEARING PLATES SHALL BE AASHTO M270 GRADE 50W OR GRADE 50.

AT ALL POINTS OF SUPPORT, NUTS FOR ANCHOR BOLTS SHALL BE FINGER-TIGHTENED PLUS AN ADDITIONAL 1/4 TURN. THE THREAD OF THE NUT AND BOLT SHALL THEN BE BURRED WITH A SHARP POINTED TOOL.

WHEN WELDING THE SOLE PLATE TO THE GIRDER, USE TEMPERATURE INDICATING WAX PENS, OR OTHER SUITABLE MEANS, TO ENSURE THAT THE TEMPERATURE OF THE BEARING DOES NOT EXCEED 250°F. TEMPERATURES ABOVE THIS MAY DAMAGE THE TFE OR URETHANE DISC.

AFTER BEARING ASSEMBLY IS IN PLACE AND ANCHOR BOLTS HAVE BEEN FINALLY POSITIONED, THEY SHALL BE GROUTED IN PLACE AS SHOWN.

THE CLOSURE PLATE, GROUT PIPE, AND STANDARD PIPE FOR THIS ASSEMBLY NEED NOT BE GALVANIZED.

SOLE PLATES SHOULD BE WELDED TO GIRDER FLANGES AND ANCHOR BOLTS SHOULD BE GROUTED BEFORE FALSEWORK IS PLACED.

ALL SURFACES OF BEARING PLATES SHALL BE SMOOTH AND STRAIGHT.

FOR ATTACHMENT OF THE STAINLESS STEEL SHEETS TO THE STEEL SOLE PLATE AND GUIDE BARS, AS WELL AS THE TOP AND SIDE PTFE SHEETS TO THE STEEL UPPER BEARING PLATE, SEE SPECIAL PROVISIONS.

FOR THERMAL SPRAYED COATINGS (METALLIZATION), SEE SPECIAL PROVISIONS.

THE MINIMUM ROTATIONAL CAPACITY FOR ALL BEARINGS SHALL BE 0.02 RADIANS.

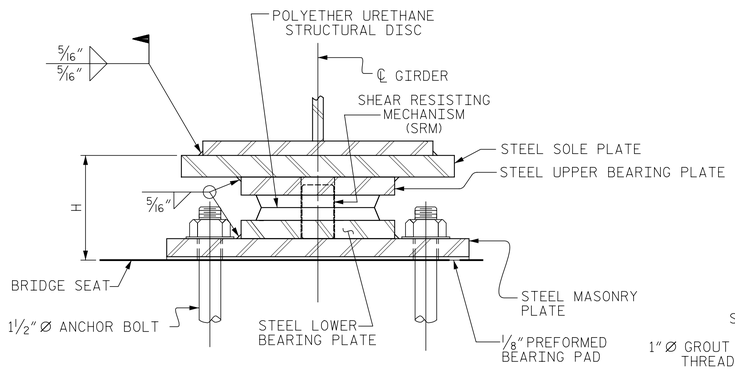

SECTION A-A

DB1, FIXED

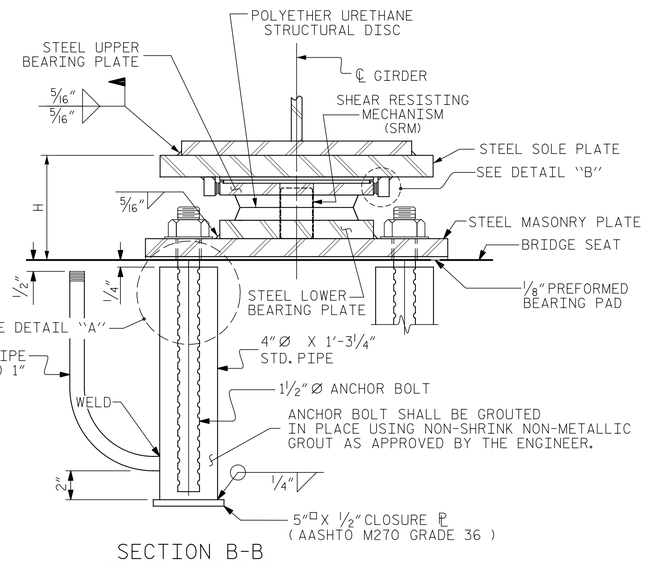

SECTION B-B

DB2, EXP.

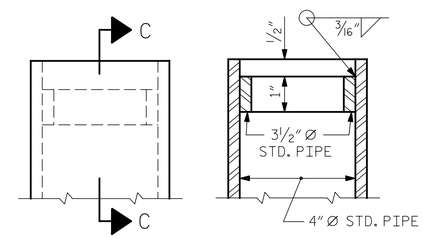

DETAIL "A"

SECTION C-C

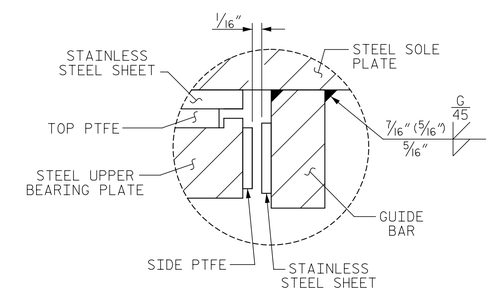

DETAIL "B"

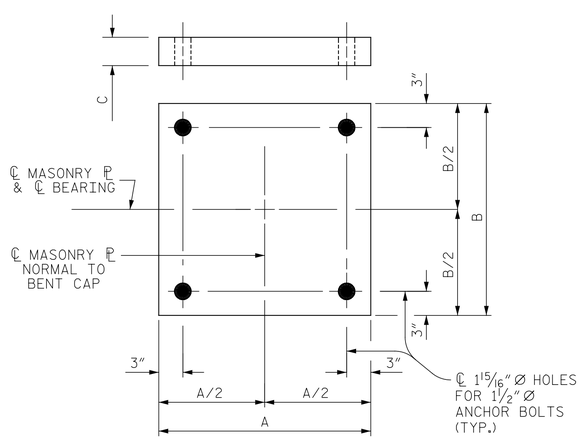

PLAN

MASONRY PLATE DETAILS

PLATE SETTING DATA

(EXPANSION DISC BEARINGS)

LOCATION	TEMPERATURE AT TIME OF SETTING			*
	45° F	60° F	90° F	
END BENT 2	-3/16"	0	3/8"	7/8"

* CORRECTION FOR END ROTATION DUE TO WEIGHT OF SLAB AND COMPOSITE DEAD LOAD.

TEMPERATURE SETTING DETAIL

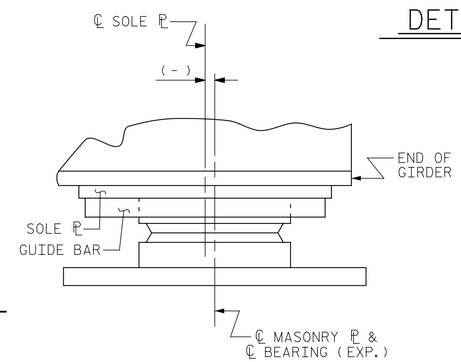

DESIGNATIONS		LOCATION	NUMBER OF BEARINGS	DIMENSIONS						LOADS AND MOVEMENT				
				BEARING	MASONRY PLATE			SOLE PLATE		UNFACTORED VERTICAL LOAD (KIPS)			FACTORED HORIZONTAL LOAD (KIPS)	ONE-WAY MOVEMENT (IN.)
										DEAD		LIVE		
BEARINGS	MASONRY PL			H (IN.)	A (IN.)	B (IN.)	C (IN.)	TOP SLOPE (%)	L (IN.)	DC	DW	LL+IM		
DB1 (FIXED)	M1	END BENT 1	5	5 1/2	22 1/2	22 1/2	3/4	0	26	245	32	173	119	0
DB2 (EXP.)	M2	END BENT 2	5	6 1/2	28 1/2	28 1/2	3/4	0	26	245	32	173	119	1 5/16"

PROJECT NO. I-0914AB

VANCE COUNTY

STATION: 177+61.31 -NBL-
22+31.77 -Y2SBL

STATE OF NORTH CAROLINA
DEPARTMENT OF TRANSPORTATION
RALEIGH

STANDARD

DISC BEARING DETAILS

DocuSigned by: Hardy Willis 7/14/2014

NORTH CAROLINA PROFESSIONAL SEAL ENGINEER 20711 CHARLES L. WILLIS

ASSEMBLED BY : MAF DATE : 5/14
CHECKED BY : HLW DATE : 5/14

DRAWN BY : TMG 08/13
CHECKED BY : EKP 10/13

REV.
REV.
REV.

SHEET 17 OF 37

REVISIONS						SHEET NO.
NO.	BY:	DATE:	NO.	BY:	DATE:	S-65
1			3			TOTAL SHEETS
2			4			177

STD. NO. DB1

$$$$$$SYSTIME$$$$$
$$$$$$$$$$$$$$$$$$$$DGN$$$$$$$$$$$$$$$$$$$$$$$$
$$$$USERNAME$$$$