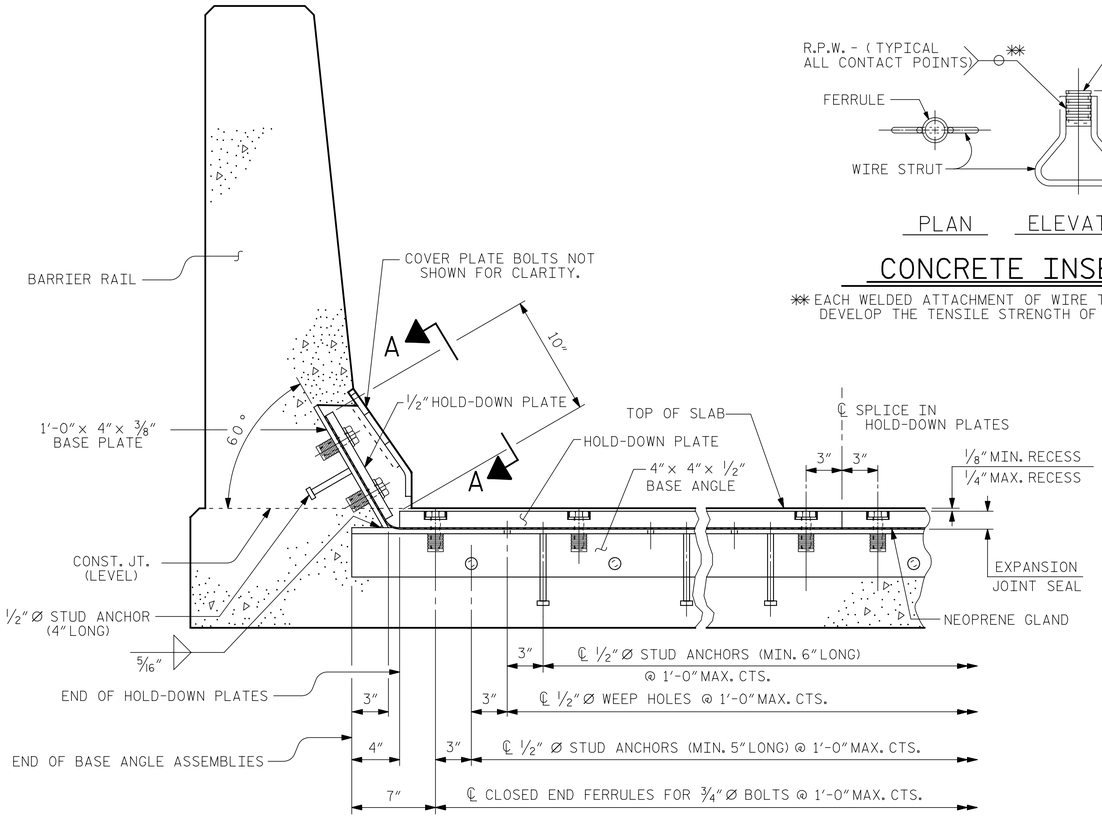

SECTION THRU RAIL NORMAL TO JOINT

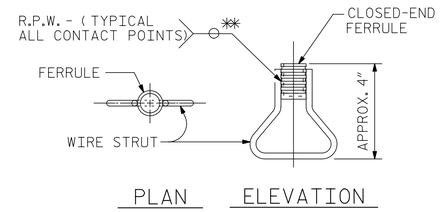

CONCRETE INSERT

** EACH WELDED ATTACHMENT OF WIRE TO FERRULE SHALL DEVELOP THE TENSILE STRENGTH OF THE WIRE.

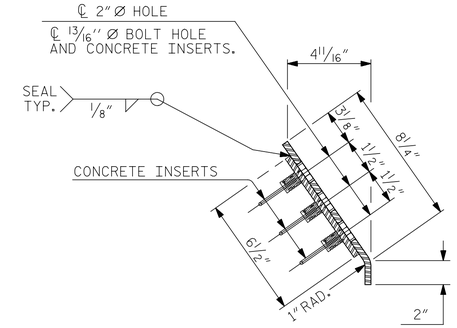

END VIEW

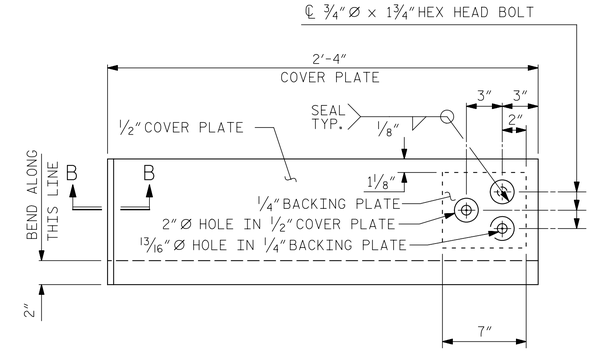

TYPE II - ELEVATION VIEW

COVER PLATE DETAILS

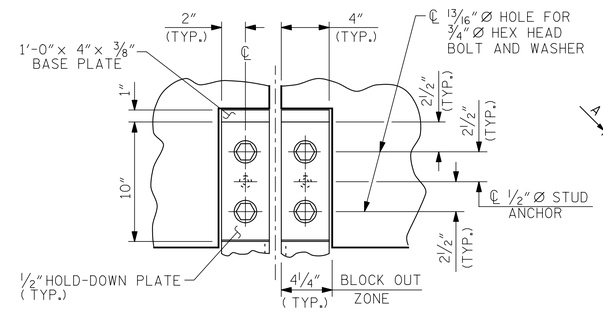

SECTION A - A

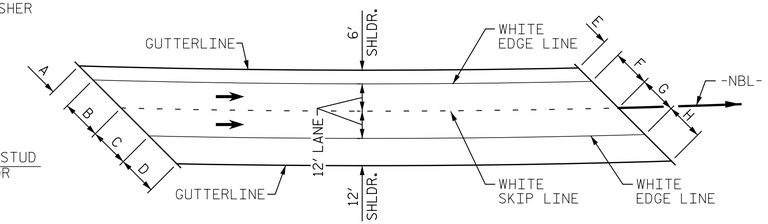

TABLE OF LETTERED DIMENSIONS							
A	B	C	D	E	F	G	H
8'-8 7/8"	17'-5 5/16"	17'-4 5/8"	17'-4"	8'-3 11/16"	16'-6 15/16"	16'-6 7/16"	16'-6"

PAVEMENT MARKING ALIGNMENT

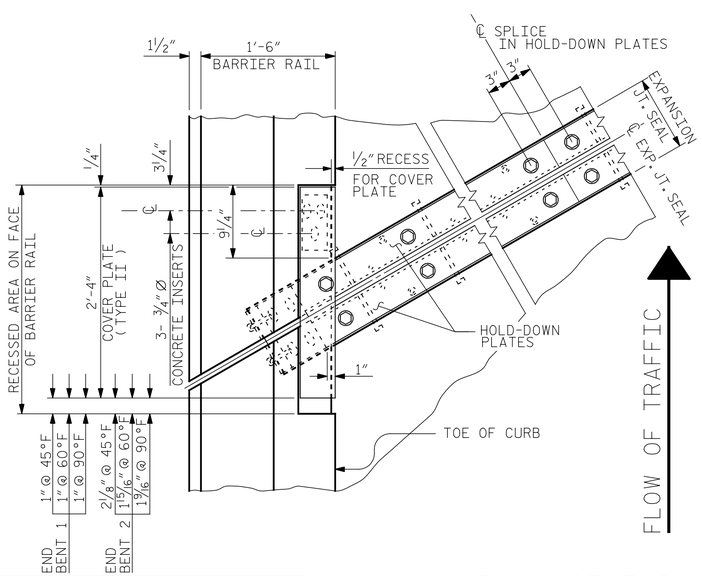

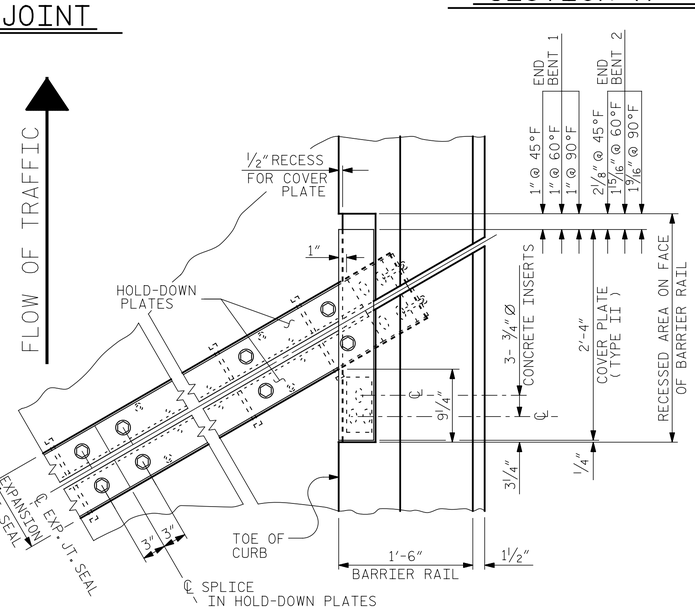

PLAN OF EXPANSION JOINT SEAL

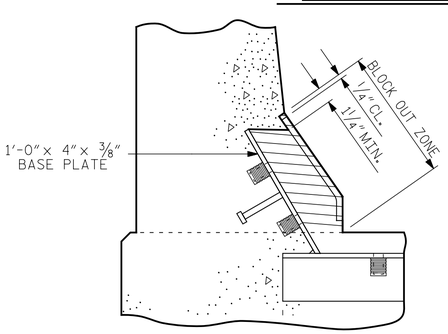

BLOCK OUT DETAIL

SEE "SECTION A - A" FOR OTHER DETAILS.

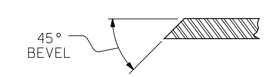

SECTION B - B

PROJECT NO. I-0914AB

VANCE COUNTY

STATION: 177+61.31 -NBL-
22+31.77 -Y2SBL-

SHEET 2 OF 2

STATE OF NORTH CAROLINA
DEPARTMENT OF TRANSPORTATION
RALEIGH

STANDARD

EXPANSION JOINT SEAL DETAILS FOR BARRIER RAIL

NORTH CAROLINA PROFESSIONAL SEAL 20771 ENGINEER HARDY WILLIS
DocuSigned by: Hardy Willis
7/14/2014

ASSEMBLED BY : MAF	DATE : 5/14
CHECKED BY : HLW	DATE : 5/14
DRAWN BY : REK 9/87	REV. 10/1/11 MAA/GM
CHECKED BY : CRK 10/87	REV. 7/12 MAA/GM
	REV. 6/13 MAA/GM

SHEET 19 OF 37	
DWN. BY: MAF	DATE: 4/14
CHKD. BY: HLW	DATE: 4/14
DES. EGR. OF RECORD: RTS	DATE: 4/14

REVISIONS						SHEET NO.
NO.	BY:	DATE:	NO.	BY:	DATE:	S-67
1			3			TOTAL SHEETS
2			4			177

$$$$$$SYSTIME$$$$$
$$$$$$$$$$$$$$$$$$$$$$$$DGN$$$$$$$$$$$$$$$$$$$$$$$$
$$$$USERNAME$$$$

STD. NO. EJS2 SHT 3