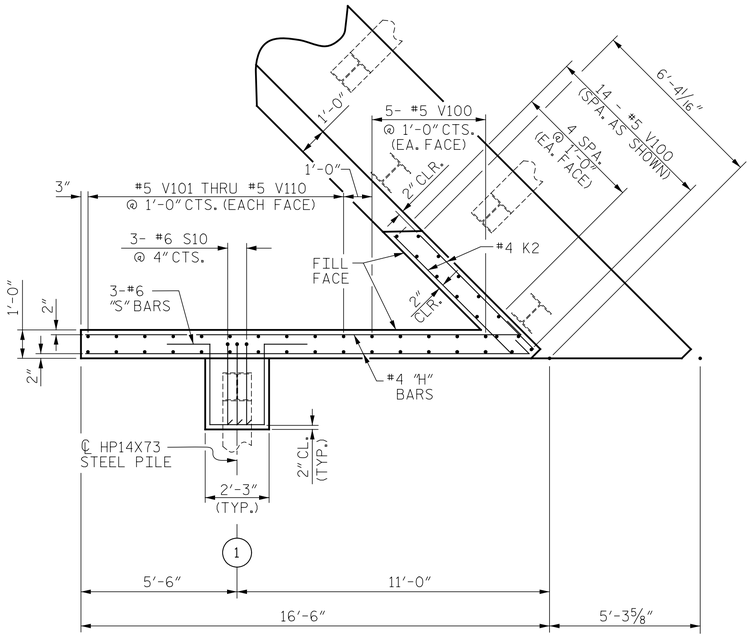

PLAN - WING (W3)

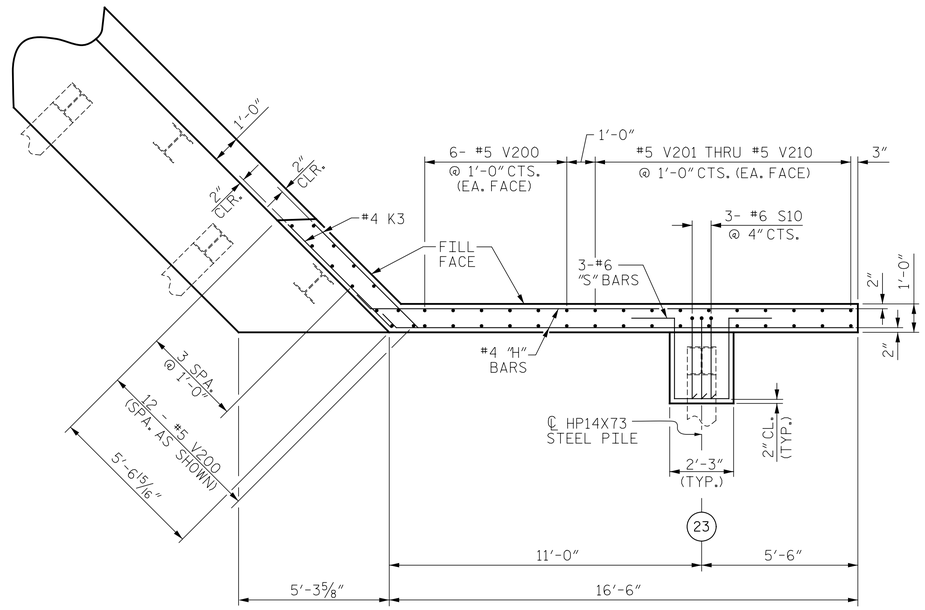

PLAN - WING (W4)

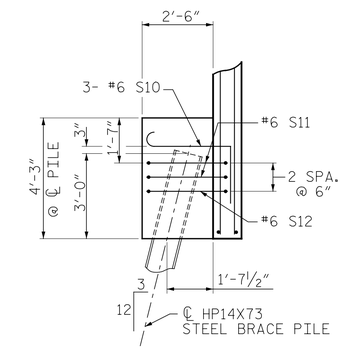

PARTIAL SECTION Z-Z

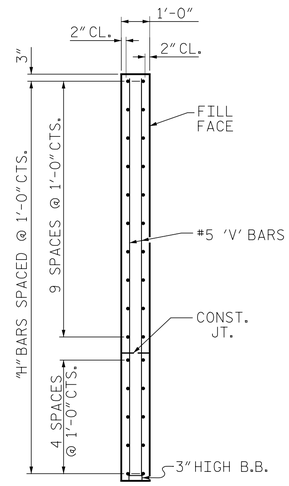

SECTION X-X

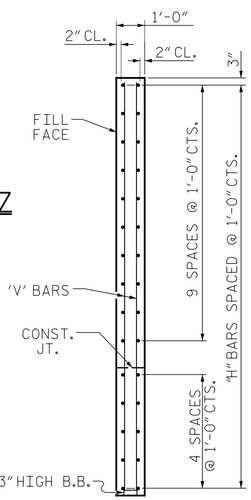

SECTION Y-Y

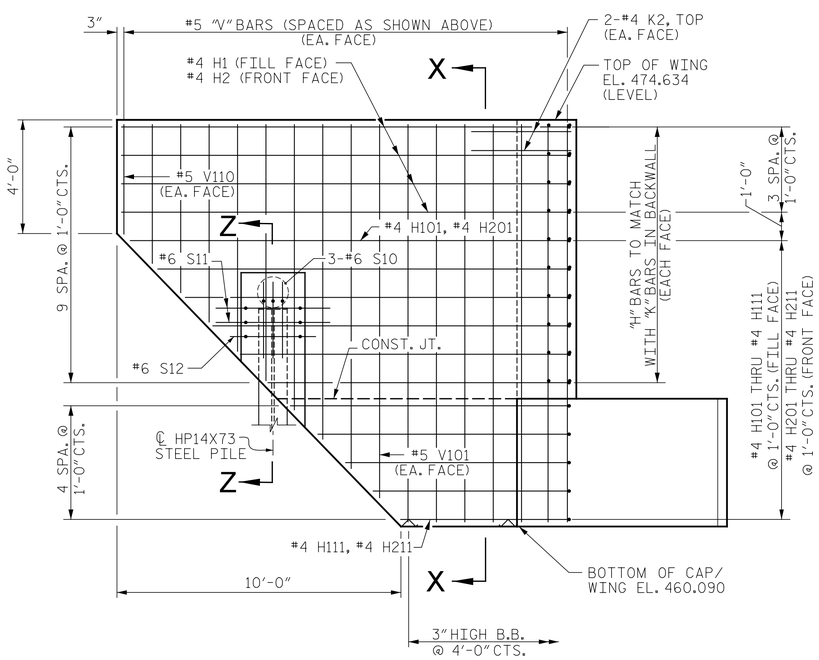

ELEVATION - WING (W3)

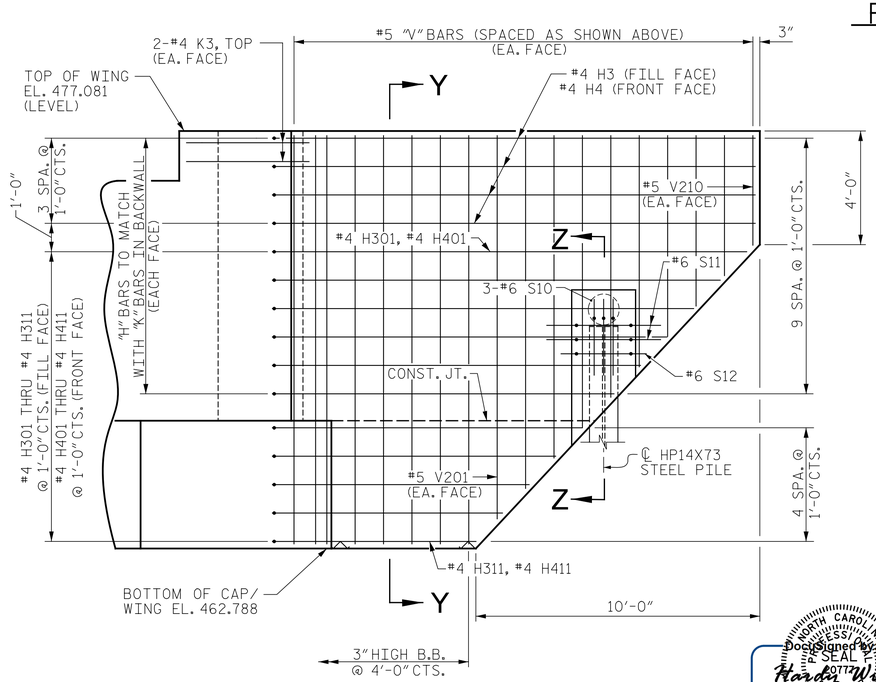

ELEVATION - WING (W4)

PROJECT NO. I-0914BA

VANCE COUNTY

STATION: 177+61.31 -NBL-
22+31.77 -Y2SBL-

SHEET 2 OF 5

STATE OF NORTH CAROLINA
DEPARTMENT OF TRANSPORTATION
RALEIGH

END BENT NO. 2

NORTH CAROLINA PROFESSIONAL SEAL ENGINEER HARDY L. WILLIS 019481

DocSigned by: Hardy Willis
COD7F1CE0D2A401...
7/14/2014

V&M Vaughn & Melton Consulting Engineers
Asheville, North Carolina 828-253-2796
Charlotte, North Carolina 704-357-0488
Tri-Cities, Tennessee 423-467-840
Knoxville, Tennessee 865-546-1800
Middlesboro, Kentucky 606-248-6600
Spartanburg, South Carolina 864-574-4775
Copyright © 2006 Vaughn & Melton, Inc. All Rights Reserved

SHEET 30 OF 37		REVISIONS						SHEET NO.
DWN. BY: MAF	DATE: 5/14	NO.	BY:	DATE:	NO.	BY:	DATE:	S-78
CHKD. BY: HLW	DATE: 5/14	1			3			TOTAL SHEETS
DES. EGR. OF RECORD: RTS	DATE: 5/14	2			4			177